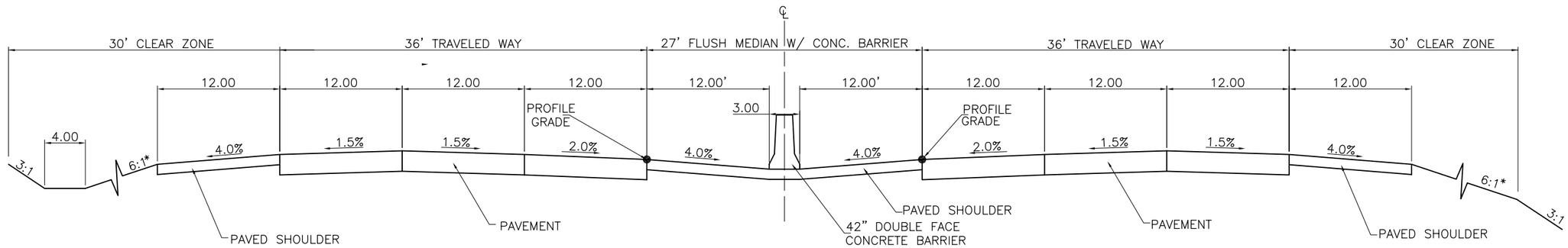

* SLOPE 3:1 OUTSIDE CLEAR ZONE
SLOPE 2:1 FOR FILLS > 30'

PROPOSED 1–39/U.S. 20

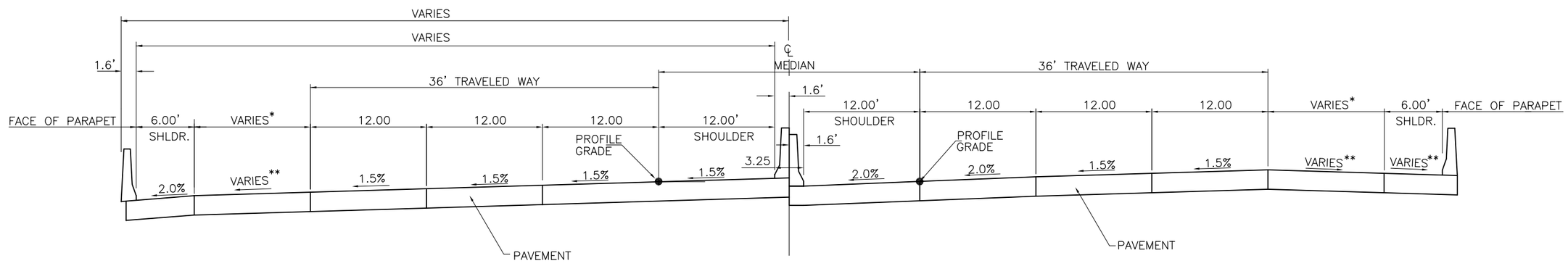

* 23' @ STA. 873+68.80
1' @ STA. 862+08.51

** SE = +6.0% @ STA. 874+23.80
SE = +1.5% @ STA. 872+58.80

* 16' @ 873+40.91
20.33' @ 871+07.91

** SE = +6.0% @ STA. 870+52.91
SE = −1.5% @ STA. 873+64.91

PROPOSED BRIDGE REPLACEMENT

I-39 OVER HARRISON
(SN 101-0071, 101-0072)

HANSON
Hanson Professional Services Inc.

TYPICAL SECTIONS

FAI ROUTE 39 (I-39) & FAP ROUTE 301 (US 20)
SECTIONS (201-3) K & (4-1,5) K
WINNEBAGO COUNTY
JOB NO. P-92-111-06

HANSON NO. 06S2055 FIGURE NO. B

APR 30, 2008 11:44 AM AUSTI00148
I:\06JOBS\06S2055\ADMIN\14-REPORTS\INTERCHANGE TYPE STUDIES\I-39-HARRISON FIGURES\FIGURE B.DWG