Illinois Department of Transportation

PORTLAND CEMENT CONCRETE

LEVEL I

TECHNICIAN COURSE

"Manual of Instructions for Concrete Testing"

Effective: December 1, 1995
Revised: November 1, 2012

Illinois Department of Transportation
Departmental Policies

MAT-16

Effective Date: November 1, 2007
Scheduled Review Date: November 1, 2013

PORTLAND CEMENT CONCRETE LEVEL I TECHNICIAN COURSE - MANUAL OF INSTRUCTIONS FOR CONCRETE TESTING

1. POLICY

It is the policy of the Department of Transportation to publish and maintain a manual which provides guidelines for sampling, testing and adjusting concrete mixtures.

2. PURPOSE

The purpose of this Policy is to provide for the publication of a manual to serve as a guide and source of reference for the practices and procedures for those involved in the sampling, testing and adjusting of concrete mixtures.

3. GUIDELINES FOR IMPLEMENTATION

A. The manual is prepared with emphasis on practices and procedures currently used by the department.

B. The manual is intended to train individuals in the sampling, testing and adjusting of concrete mixtures.

C. Department training classes shall utilize the current edition of this manual for all applicable procedures.

D. The manual contains sampling, testing and mix adjustment procedures that will provide uniformity of work performed by the contractor, the department or consultants retained by either.

4. RESPONSIBILITIES

The following outlines the individual and office responsibilities to ensure compliance with the provisions of this Policy and its accompanying manual.

A. The Bureau of Materials and Physical Research (BMPR) is responsible for the issuance of this Policy.

B. The Division of Highways' (DOH) regions/districts are responsible for ensuring compliance with this Policy.

C. The Engineer of Concrete and Soils of the DOH's BMPR Materials Testing Section shall be contacted when questions arise regarding the application of these procedures.

5. ACCESSIBILITY

A. LOCATION

Electronic versions of this Policy and its accompanying manual are located at the Policy & Research Center site on insideIDOT, the department's internal website. Electronic versions can also be found at http://www.dot.il.gov/materials/guidesmanuals.html.

Questions regarding the manual may be directed to the Bureau of Materials and Physical Research, 126 East Ash Street, Springfield, Illinois 62704-4766

B. COPIES

Hard copies of this Policy may be obtained by contacting the Bureau of Business Services (BoBS), Quality and Document Management Services Section.

C. ARCHIVES & REVISION HISTORY

Archived versions of this Policy and its revision history may be examined by contacting BMPR.

CLOSING NOTICE

Manual: Portland Cement Concrete Level I Technician Course - Manual of Instructions for Concrete Testing.

Supersedes: Policy MAT-8, Manual of Instructions for Concrete Proportioning and Testing, Effective: January 1, 1988

Approved: _____
Director of Highways

12/03/08
_____
Date

LAKE LAND COLLEGE
INSTRUCTOR AND COURSE EVALUATION

Course: PCC Level I Technician Course **Section:** _____ **Date:** _____

PURPOSE: The main emphasis at Lake Land College is teaching. In this regard, each instructor must be continuously informed of the quality of his/her teaching and the respects in which that teaching can be improved. As a student, you are in a position to judge the quality of teaching from direct experience, and in order to help maintain the quality of instruction at Lake Land, you are asked to complete this evaluation.

DIRECTIONS: **DO NOT SIGN YOUR NAME**. Your frankness and honesty are appreciated.

First, please record your general impressions and/or comments on the following:

Course _____

_____

Instructor _____

For each remaining item, circle the number from the scale which seems most appropriate to you for the instructor and course that you are evaluating. You are strongly encouraged to make any comments that will clarify particular rating on the back of this form; please refer to each item you are discussing by its number.

			WEAK				SUPERIOR
OBJECTIVES AND APPROPRIATENESS OF THE COURSE:							
1.	**Clarity of Objectives**	The objectives of the course were clearly identified. Objectives were adequately covered.	1	2	3	4	5
2.	**Selection content**	Content was relevant and met the level of the class.	1	2	3	4	5
ORGANIZATION AND CONTENT OF LESSONS:							
3.	**Teacher preparation**	Instructor was organized and knowledgeable in subject matter and prepared for each class.	1	2	3	4	5
4.	**Organization of classes**	Classroom activities were well organized and clearly related to each other.	1	2	3	4	5
5.	**Selection of materials**	Instructional materials and resources used specific, current, and clearly related to the objectives of the course.	1	2	3	4	5
6.	**Clarity of presentation**	Content of lessons was presented so that it was understandable to the students.	1	2	3	4	5
7.	**Clarity of presentation**	Different point of view and/or methods with specific illustrations were used when appropriate.	1	2	3	4	5

OVER

LAKE LAND COLLEGE
INSTRUCTOR AND COURSE EVALUATION
(PAGE 2)

			WEAK				SUPERIOR
PERSONAL CHARACTERISTICS AND STUDENT RAPPORT:							
8.	**Vocabulary**	Instructor's vocabulary level was appropriate for the class.	1	2	3	4	5
9.	**Pupil participation and interest**	Instructor encouraged students to ask questions and actively participate in class.	1	2	3	4	5
10.	**Personal attributes**	Instructor indicated an interest and enthusiasm for teaching the subject matter.	1	2	3	4	5
11.	**Personal attributes**	Instructor was familiar with current industry practices.	1	2	3	4	5
12.	**Personal attributes**	Instructor's mannerisms were pleasing.	1	2	3	4	5
13.	**Instructor-student rapport**	Instructor indicated a willingness to help you in times of difficulty.	1	2	3	4	5
14.	**Instructor-student rapport**	Instructor was fair and impartial in dealings with you.	1	2	3	4	5
EXAMINATION:							
15.	**Exam material**	The exam correlated to the materials being covered in class.	1	2	3	4	5
SUMMARY:							
16.	Considering everything, how would you rate this instructor?		1	2	3	4	5
17.	Considering everything, how would you rate this course?		1	2	3	4	5

COMMENTS: (Please use the area below to add any additional comments regarding the class and exam.)

COURSE REQUIREMENTS FOR SUCCESSFUL COMPLETION

Student must attend all class sessions. Photo identification on first day of class and prior to taking the written and physical exams is required.

- PREREQUISITE COURSE — None.

- WRITTEN TEST (Day 1) - The test is open book. The time limit is 1 hour. A minimum grade of 70 is required.

  Note: For day 1, the Department has no out-of-state reciprocity.

  WRITTEN RETEST - If the student fails the written test, a retest can be performed. The test is open book. The time limit is 1 hour. A minimum grade of 70 is required. A retest will not be given on the same day as the initial test. A retest must be taken by the end of the academic year that the initial test was taken. The academic year runs from September 1st to August 31st. **(For example, if the test was taken November 26, 2012, the last date to retest is August 31, 2013.)** Failure of the written retest, or failure to comply with the academic year retest time limit, shall require the student to retake the class and the test. The student shall be required to pay the appropriate fee for the additional class.

  NOTIFICATION – The student will be notified by letter of their test score. A certificate of completion will be issued if the student passes the course, and the 6 professional development hours earned will be indicated on the certificate. Once trained, the Department will not require the individual to take the class again for recertification purposes.

  Note: For the American Concrete Institute (ACI), see page ii. In addition, if the student passes the day 1 written test or the retest within the academic year time limit, but fails the ACI certification and does not complete retesting within the same period, the student will not be required to retake the day 1 class and test. However, the Department must have documentation to show the student passed this portion of the training when the student finally does pass the ACI certification. The student is advised that this documentation may be destroyed after an extended period of time.

- ACI TESTS (Days 2 and 3) — The written and performance examinations will be in accordance with the American Concrete Institute (ACI). Successful completion is determined according to ACI.

  Individuals enrolling in the training course who possess current ACI certification as a Concrete Field Testing Technician - Grade I are not required to repeat the written and performance examinations. These individuals will be required to attend the first day of the three day course, and present their current ACI wallet card or certificate to successfully complete the Department's cast-in-place QC/QA concrete program.

  NOTE: For days 2 and 3, the Department has out-of-state reciprocity for the ACI certification, Concrete Field Testing Technician - Grade I.

- ACI RETEST — The written and performance re-examinations will be in accordance with ACI. Successful completion is determined according to ACI.

- ACI RECERTIFICATION — ACI certification as a Concrete Field Testing Technician - Grade I is valid for five years. An individual has the option to renew this certification, but it is not required for the cast-in-place concrete and precast concrete products QC/QA programs. For the precast prestressed concrete QC/QA program, renewal of certification is not required except as may be mandated for a fabrication plant certified under the "Precast/Prestressed Concrete Institute Certified Program."

  Note: Successful completion of the ACI portion of the course, days 2 and 3, can be used to meet the requirements of the precast prestressed concrete QC/QA program, and the precast concrete products QC/QA program. Recertification requirements are according to ACI. The Department also has out-of-state reciprocity for the ACI class. Day 1 is specifically for the cast-in-place concrete QC/QA program.

PREFACE

This manual has been prepared to train the student to become a Level I PCC Technician. The manual discusses the various aspects to make concrete adjustments, for Illinois Department of Transportation (herein referred to as “IDOT” or the “Department”), Quality Control/Quality Assurance (QC/QA) projects. The manual discusses various test methods, but any question regarding the correct test method shall be resolved by the Manual of Test Procedures for Materials, which has precedence over this manual. The manual provides basic information, and is intended to be a useful reference tool. This manual is applicable for the January 1, 2012, Standard Specifications for Road and Bridge Construction, the Portland Cement Concrete (BDE) Special Provision, Revised: January 1, 2013 and the Placing and Consolidating Concrete (BDE) Special Provision, Effective: January 1, 2013. It shall be noted that Section 1020 in the Portland Cement Concrete (BDE) Special Provision completely replaces Section 1020 in the Standard Specifications. Therefore, any reference to an Article in Section 1020 in this manual is referring to the Portland Cement Concrete (BDE) Special Provision.

Revision History and Document Control

The Portland Cement Concrete Level I Technician Course Manual will be reviewed by the Engineer of Concrete and Soils for adequacy annually and updated as necessary to reflect the current policies and technology changes. Updates are made to the electronic file as needed and hard copies are uncontrolled. Archive versions are available to examine in the Bureau of Material and Physical Research.

Revision Date	Description	Approval
November 1, 2012	Revised first paragraph and added new information to Note: in “Course Requirements for Successful Completion”.	Doug Dirks
November 1, 2012	Revised Preface.	Doug Dirks
November 1, 2012	Revised Table of Contents.	Doug Dirks
November 1, 2012	Added new term, “Supplementary Cementitious Material”, to Definitions.	Doug Dirks
November 1, 2012	Inserted Illinois Test Procedure SCC-8 and replaced Illinois Modified AASHTO T 255 with Illinois Test Procedure 255 in Summary of Test Methods.	Doug Dirks
November 1, 2012	Added designations PC (Precast Concrete) and PS (Precast Prestressed) to Class of Concrete.	Doug Dirks
November 1, 2012	Reformatted table in Section 3.2, “Mixer and Agitator Trucks”.	Doug Dirks
November 1, 2012	Added new paragraph to end of Section 4.2, “Truck Revolutions”.	Doug Dirks
November 1, 2012	Revised third paragraph in Section 6.0, “Air Content”.	Doug Dirks
November 1, 2012	Added new information in first paragraph in Section 6.1.2, “Pressure Meter”.	Doug Dirks
November 1, 2012	Added new information in first paragraph in Section 6.1.3, “Volumetric Meter”.	Doug Dirks
November 1, 2012	Revised second bullet point in Section 6.3.1, “Low Air”.	Doug Dirks
November 1, 2012	Revised first paragraph in Section 6.3.2, “High Air”.	Doug Dirks
November 1, 2012	Completely replaced fourth paragraph in Section 6.4, “Air Content Loss” with new wording and revised wording in sixth paragraph.	Doug Dirks
November 1, 2012	Revised second bullet point in Section 7.3.1, “Low Slump”.	Doug Dirks
November 1, 2012	Added new paragraph in Section 9.1, “Molding Strength Specimens”.	Doug Dirks
November 1, 2012	Revised first and last paragraphs in Section 9.2, “Curing Strength Specimens”.	Doug Dirks

Revision Date	Description	Approval
November 1, 2012	Added Section 9.2.1, “Initial Curing”.	Doug Dirks
November 1, 2012	Revised first paragraph in Section 9.3, “Transporting Strength Specimens to Final Curing Location”.	Doug Dirks
November 1, 2012	Revised seventeenth bullet point in Section 9.8.1, “Investigating Low Strength Concrete”.	Doug Dirks
November 1, 2012	Revised first and second paragraphs in Section 9.8.2.3.3, “Other Tests”.	Doug Dirks
November 1, 2012	Revised first paragraph in Section 9.9, “Comparing Individual Cylinder Test Results”.	Doug Dirks
November 1, 2012	Added a “note” and revised first paragraph in Section 10.0, “Concrete Temperature”.	Doug Dirks
November 1, 2012	Added information to fourth bullet point in Section 10.1, “High Temperature”.	Doug Dirks
November 1, 2012	Revised first paragraph in Section 11.2, “Retarding Admixture”.	Doug Dirks
November 1, 2012	Revised first paragraph in Section 11.3, “Water-Reducing Admixture”.	Doug Dirks
November 1, 2012	Revised seventh bullet point in Section 11.5.1, “Adding an Accelerating Admixture at the Jobsite”.	Doug Dirks
November 1, 2012	Revised fifth bullet point in Section 11.7.2, “Adding a Superplasticizer at the Jobsite”.	Doug Dirks
November 1, 2012	Revised first bullet point in Section 13.0, “Water-Cement Control”.	Doug Dirks
November 1, 2012	Revised first paragraph in Section 15.3.1, “Cold Joint”.	Doug Dirks
November 1, 2012	Revised first paragraph in Section 15.3.2, “Fold from Self-Consolidating Concrete (SCC)”.	Doug Dirks
November 1, 2012	Added Section 15.3.3, “Laminations”.	Doug Dirks
November 1, 2012	Revised second paragraph in Section 16.0, “Communication”.	Doug Dirks
November 1, 2012	Inserted updated “Quality Control/ Quality Assurance of Concrete Mixtures (BDE) Special Provision in Provision in Appendix A.	Doug Dirks
November 1, 2012	Inserted updated “Qualities and Duties of Concrete Quality Control Personnel” document in Appendix B.	Doug Dirks
November 1, 2012	Inserted updated “Required Sampling and Testing Equipment for Concrete” document in Appendix C.	Doug Dirks
November 1, 2012	Revised forms BMPR PCCQ01 through PCCQ05 to match AASHTO Test Methods in Appendix D.	Doug Dirks
November 1, 2012	Revised first paragraph in Appendix H.	Doug Dirks

Revision Date	Description	Approval
November 1, 2012	Added Illinois Test Procedure SCC-8 in Appendix H-A.	Doug Dirks
November 1, 2012	Inserted updated Illinois Test Procedure SCC-10 document in Appendix H-C.	Doug Dirks
November 1, 2012	Revised “Plant or Jobsite Documentation Example Format” sheet and added new “Plant or Jobsite Documentation Example Format” sheet for Self-Consolidating Concrete (SCC) in Appendix J.	Doug Dirks
November 1, 2012	Inserted new forms and instructions for BMPR MI654 and MI655 in Appendix K.	Doug Dirks
November 1, 2012	Inserted updated “Model Quality Control Plan for Concrete Production” document in Appendix L.	Doug Dirks
November 1, 2012	Replaced Policy Memorandum 20-08.0 with Policy Memorandum 20-08.1 in Appendix M.	Doug Dirks
November 1, 2012	Replaced Illinois Modified AASHTO T 255 with Illinois Test Procedure 255, “Total Evaporable Moisture Content of Aggregate by Drying” in Appendix N.	Doug Dirks

TABLE OF CONTENTS

DEFINITIONS (Page xii)

SUMMARY OF TEST METHODS (Page xv)

CLASS OF CONCRETE (Page xvi)

1.0 QC/QA PERSONNEL (Page 1)
- 1.1 PERSONNEL REQUIREMENTS
- 1.2 QUALIFICATIONS AND DUTIES OF CONCRETE QUALITY CONTROL PERSONNEL

2.0 TESTING (Page 2)
- 2.1 EQUIPMENT REQUIREMENTS
- 2.2 EQUIPMENT CALIBRATION
- 2.3 TYPES OF SAMPLES
- 2.4 RANDOM SAMPLING
- 2.5 FREQUENCY OF SAMPLING AND TESTING
- 2.6 TEST METHODS
- 2.7 ADJUSTMENTS TO A CONCRETE MIXTURE AT THE JOBSITE
- 2.8 FLAWED TEST

3.0 HAUL TIME (Page 4)
- 3.1 NONAGITATOR TRUCKS
- 3.2 MIXER AND AGITATOR TRUCKS
- 3.3 PLANT TESTING
- 3.4 QUALITY CONTROL

4.0 MIXING (Page 5)
- 4.1 BATCH PLANTS
- 4.2 TRUCK REVOLUTIONS

5.0 SAMPLING (Page 7)

6.0 AIR CONTENT (Page 8)
- 6.1 VARIATIONS
  - 6.1.1 General
  - 6.1.2 Pressure Meter
  - 6.1.3 Volumetric Meter
- 6.2 QUALITY CONTROL
- 6.3 ADJUSTMENTS
  - 6.3.1 Low Air
  - 6.3.2 High Air

TABLE OF CONTENTS
(Continued)

6.4 AIR CONTENT LOSS
6.5 AGGREGATE CORRECTION FACTOR
6.6 GENERAL
6.7 CARE OF DEPARTMENT MADE TYPE “A” AIR METERS (For IDOT Personnel)

7.0 SLUMP (Page 13)
7.1 VARIATIONS
7.2 QUALITY CONTROL
7.3 ADJUSTMENTS
7.3.1 Low Slump
7.3.2 High Slump
7.4 GENERAL
7.5 RETEMPERING WITH WATER
7.5.1 RESTRICTION
7.5.2 CAUTION

8.0 UNIT WEIGHT/YIELD (Page 17)
8.1 VARIATIONS
8.2 QUALITY CONTROL
8.3 ACCURACY

9.0 CONCRETE STRENGTH (Page 19)
9.1 MOLDING STRENGTH SPECIMENS
9.2 CURING STRENGTH SPECIMENS
9.2.1 INITIAL CURING
9.3 TRANSPORTING STRENGTH SPECIMENS TO FINAL CURING LOCATION
9.4 CURING IN SATURATED LIME WATER
9.5 QUALITY CONTROL
9.6 HAND PUMP BEAM BREAKER
9.7 CARE OF DEPARTMENT MADE BEAM BREAKER (For IDOT Personnel)
9.8 LOW STRENGTH
9.8.1 Investigating Low Strength Concrete
9.8.2 Suggested Guidelines to Follow after a Low Strength or Invalid Test Result Occurs
9.8.2.1 Location of Unacceptable Concrete
9.8.2.2 Consultation with Engineer of Record
9.8.2.3 Methods for Evaluating Unacceptable Concrete

TABLE OF CONTENTS
(Continued)

9.8.2.3.1 Coring
9.8.2.3.2 Load Test
9.8.2.3.3 Other Tests
9.8.2.3.4 Strength Curve
9.9 COMPARING INDIVIDUAL CYLINDER TEST RESULTS

10.0 CONCRETE TEMPERATURE (Page 30)
10.1 HIGH TEMPERATURE
10.2 TAKING PRECAUTIONS IN THE FIELD DURING HOT WEATHER
10.3 LOW TEMPERATURE
10.4 TAKING PRECAUTIONS IN THE FIELD DURING COLD WEATHER
10.5 QUALITY CONTROL
10.6 GENERAL

11.0 ADMIXTURES (Page 33)
11.1 ADMIXTURES AND THEIR DESIGNATIONS
11.2 RETARDING ADMIXTURE
11.3 WATER-REDUCING ADMIXTURE
11.4 MID-RANGE WATER-REDUCING ADMIXTURE
11.5 HIGH-RANGE WATER-REDUCING ADMIXTURE (Superplasticizer)
11.5.1 Adding a Superplasticizer at the Jobsite
11.6 VISCOSITY MODIFYING ADMIXTURE
11.7 ACCELERATING ADMIXTURE
11.7.1 Calcium Chloride
11.7.2 Adding an Accelerating Admixture at the Jobsite
11.8 RHEOLOGY-CONTROLLING ADMIXTURE
11.9 CORROSION INHIBITOR

12.0 CEMENT AND FINELY DIVIDED MINERALS (Page 39)
12.1 CEMENT
12.2 FLY ASH
12.3 GROUND GRANULATED BLAST-FURNACE SLAG (GGBF SLAG)
12.4 MICROSILICA
12.5 HIGH-REACTIVITY METAKAOLIN (HRM)

13.0 WATER-CEMENT CONTROL (Page 42)

14.0 CURING (Page 43)

TABLE OF CONTENTS
(Continued)

15.0 PROBLEMS IN THE FIELD (Page 44)
- 15.1 IDENTIFYING PROBLEMS WITH A CONCRETE MIXTURE
- 15.2 BUGHOLES IN HARDENED CONCRETE
- 15.3 COLD JOINT OR FOLD IN HARDENED CONCRETE
  - 15.3.1 COLD JOINT
  - 15.3.2 FOLD FROM SELF-CONSOLIDATING CONCRETE
  - 15.3.3 LAMINATIONS
- 15.4 RAIN DAMAGED CONCRETE
- 15.5 FROZEN CONCRETE

16.0 COMMUNICATION (Page 49)

17.0 DOCUMENTATION (Page 50)

18.0 APPLICABLE SPECIFICATIONS (Page 51)

19.0 ADDITIONAL QC/QA DOCUMENT (Page 52)

20.0 CONCRETE PLANT MIXER PERFORMANCE TEST (Page 52)

21.0 CONCRETE PLANT TESTS (Page 52)

TABLE OF CONTENTS
(Continued)

Appendices

Appendix A

Check Sheet #30 – Quality Control of Concrete Mixtures at the Plant
Special Provision – Quality Control/Quality Assurance of Concrete Mixtures (BDE)

Appendix B Qualifications and Duties of Concrete Quality Control Personnel

Appendix C Required Sampling and Testing Equipment for Concrete

Appendix D Calibration of Concrete Testing Equipment

Appendix E Air Meter Adjustment Instructions

Appendix F Method for Obtaining Random Samples for Concrete

Appendix G Various Concrete Field Test Methods

Appendix H Self-Consolidating Concrete (SCC)

Appendix H-A – SCC-1, 2, 3, 4, 6, and 8 Test Methods
Appendix H-B – SCC-1, 2, 3, 4, and 6 Test Method Checklists
Appendix H-C – SCC-10 Test Method

Appendix I Controlled Low-Strength Material (CLSM)

Appendix J Plant or Jobsite Documentation Example Format

Appendix K Concrete Air, Slump, and Quality (Form BMPR MI654)
P. C. Concrete Strengths (Form BMPR MI655)

Appendix L Model Quality Control Plan for Concrete Production

Appendix M Concrete Plant Mixer Performance Test

Appendix N Concrete Plant Tests

DEFINITIONS

Bleed Water — The migration of water to the surface of the freshly placed concrete, due to the settlement of cement, finely divided minerals, and aggregates.

Blended Cement — A hydraulic cement which meets the requirements of AASHTO M 240 (ASTM C 595). The hydraulic cement consists of portland cement and one or more inorganic constituents.

Bugholes — Voids in hardened concrete that result from entrapped air bubbles migrating to where the concrete meets the form's interior surface.

Cement Aggregate Mixture (CAM) II — A lean (low cement and finely divided mineral) concrete mixture for stabilized subbase.

Cement Factor — The number of pounds of cement per cubic yard (English). The number of kilograms of cement per cubic meter (Metric). Cement factor is the same as cement content.

Cementitious Material — A general term used to indicate fly ash, ground granulated blast-furnace slag, microsilica, or high-reactivity metakaolin. However, the term is misleading because fly ash, microsilica, and high-reactivity metakaolin do not have cementitious characteristics. The term may be used interchangeably with Finely Divided Mineral.

Cold Joint — A distinct and separate layer in hardened concrete.

Concrete — A mixture consisting of cement, water, and aggregates; as a minimum. Admixtures and finely divided minerals may be added.

Consistency — The ability of freshly mixed concrete to flow. Consistency is measured by the slump test.

Controlled Low-Strength Material (CLSM) — A self-consolidating mortar mixture, which is typically used as a backfill.

Drying Shrinkage — The slight contraction of concrete when it dries.

Initial Set –- The point of time where the concrete begins to become firm. This will typically occur 2 to 4 hours after batching the concrete.

False Set — Early stiffness of the concrete without much heat. The stiffness can be dispelled by further mixing with no additional water.

Final Set – The point of time where the concrete is no longer plastic and finishing no longer can take place. This will typically occur 5 to 8 hours after batching the concrete.

Finely Divided Mineral — A general term to indicate fly ash, ground granulated blast-furnace slag, microsilica, or high-reactivity metakaolin. The term may be used interchangeably with Cementitious Material.

Flash Set — Early stiffness of the concrete, usually with much heat. The stiffness cannot be dispelled by further mixing with no additional water.

Fly Ash — The finely divided residue that results from the combustion of ground or powdered coal.

Fold — A visible line between concrete lifts involving self-consolidating concrete.

Free Moisture — Water on the surface of the individual aggregate particles.

Ground Granulated Blast-Furnace (GGBF) Slag — The glassy granular material formed when molten blast-furnace slag is rapidly chilled, and then finely ground.

High-Reactivity Metakaolin (HRM) — A manufactured product formed by calcining purified kaolinite, at a specific temperature range.

Hundredweight (cwt) — A unit of measurement equal to 100 lbs.

Independent Sample — A field sample obtained and tested by only one party.

Microsilica — The extremely fine by-product that results from the manufacture of silicon or silicon alloys.

Mortar — The fine aggregate, cement, finely divided minerals, water, and air in a concrete mixture.

Paste — The cement, finely divided minerals, water, and air in a concrete mixture.

Pervious Concrete — A permeable concrete that allows water to infiltrate the concrete and drain into the soil beneath it. The zero slump concrete mixture has little or no fine aggregate.

Plasticity — The ease of molding the concrete. A plastic concrete mixture will maintain suspension of the aggregates.

Plastic Shrinkage Cracking — Cracks as a result of rapid evaporation of moisture from the concrete surface. The cracks occur when water evaporates from the surface faster than bleed water can appear at the surface.

Portland Cement — A hydraulic cement which meets the requirements of AASHTO M 85 (ASTM C 150).

Scaling — The deterioration of the upper concrete surface, which normally extends to a maximum depth of 0.5 in. (13 mm).

Segregation — For concrete, the coarse aggregate has separated from the mortar. For aggregate, the separation of a well graded production aggregate into individual sizes, due to handling.

Self-Consolidating Concrete (SCC) — A flowable concrete mixture that does not require mechanical vibration for consolidation.

Split Sample — One of two equal portions of a field sample, where two parties each receive one portion for testing.

Standard Specifications — The Standard Specifications for Road and Bridge Construction.

Supplementary Cementitious Material — See definition for Cementitious Material.

Thermal Cracking — Cracks resulting from a significant drop in concrete temperature.

Thermal Shrinkage — The slight contraction of concrete as the temperature decreases.

Wash Water — Residual rinse water in the drum of a truck mixer or truck agitator.

Water/Cement Ratio — The weight (mass) of water, divided by the weight (mass) of cement. The water shall include mixing water, water in admixtures, free moisture on the aggregates, and water added at the jobsite.

When fly ash, ground granulated blast-furnace slag, microsilica, or high-reactivity metakaolin are used in a concrete mix, the water/cement ratio will be based on the total cement and finely divided minerals contained in the mixture.

Workability — A measure of how easy or difficult it is to place, consolidate, and finish concrete.

Yield — The volume of freshly mixed concrete from a known quantity of materials.

SUMMARY OF TEST METHODS

Air Content:
Illinois Modified AASHTO T 152 and T 196

Slump:
Illinois Modified AASHTO T 119

Strength:
Illinois Modified AASHTO T 22 and T 177

Temperature:
Illinois Modified AASHTO T 309

Unit Weight/Yield:
Illinois Modified AASHTO T 121

Self-Consolidating Concrete (SCC)
Illinois Test Procedure SCC-1
Illinois Test Procedure SCC-2
Illinois Test Procedure SCC-3
Illinois Test Procedure SCC-4
Illinois Test Procedure SCC-6
Illinois Test Procedure SCC-8
Illinois Test Procedure SCC-10

Controlled Low-Strength Material (CLSM)
Illinois Test Procedure 307

Concrete Plant Tests
Illinois Test Procedure 255
Illinois Test Procedure 301
Illinois Test Procedure 302
Illinois Test Procedure 303
Illinois Test Procedure 306

All test methods are published in the Manual of Test Procedures for Materials.

CLASS OF CONCRETE

Class Designation	Description
PV	Pavement
PP	PCC Patching
RR	Railroad Crossing
BS	Bridge Superstructure
PC	Precast Concrete
PS	Precast Prestressed
DS	Drilled Shaft
SC	Seal Coat
SI	Structures (except superstructure)

Refer to Article 1020.04 for additional information.

1.0 QC/QA PERSONNEL

1.1 PERSONNEL REQUIREMENTS

The Special Provisions for Quality Control of Concrete Mixtures at the Plant and Quality Control/Quality Assurance of Concrete Mixtures will indicate when the presence of the Level I PCC Technician is required, and discusses the use of a Concrete Tester. To review the Special Provisions, refer to Appendix A.

1.2 QUALIFICATIONS AND DUTIES OF CONCRETE QUALITY CONTROL PERSONNEL

The responsibilities of the Level I PCC Technician are listed in Appendix B.

In addition, the Level I PCC Technician is advised to take safety precautions when testing concrete. Safety glasses should be worn to protect you from the concrete mortar which can splash in your eyes. Also, gloves should be worn to protect your hands from the cement which has a high pH that can irritate the skin.

2.0 TESTING

2.1 EQUIPMENT REQUIREMENTS

The required testing equipment is indicated in Required Sampling and Testing Equipment for Concrete. Refer to Appendix C.

When acquiring new equipment, the Contractor should require the manufacturer to meet Department test method requirements. If the equipment does not meet the requirements, the Contractor should then be able to have the manufacturer repair or replace the equipment.

The Department has encountered the following problems with new equipment:

- Air meter tamping rods which are too short.
- Air meter tramping rods which are made out of aluminum or another material, instead of steel.
- Type B air meters which do not have the strike-off bar.
- Mallets which are too heavy or too light.
- Beam molds which do not have the interior sides, bottom, and ends at right angles. For example, beam molds with an interior radius at the bottom or top of the mold are unacceptable.
- Slump molds having riveted handles. The interior of the slump mold is to be relatively smooth and free from projections.

2.2 EQUIPMENT CALIBRATION

The forms for documenting equipment calibrations are indicated in Calibration of Concrete Testing Equipment. Refer to Appendix D.

The proper calibration of an air meter is important. Therefore, air meter adjustment instructions are provided in Appendix E to assist the Level I PCC Technician.

2.3 TYPES OF SAMPLES

An independent sample is a field sample obtained and tested by only one party. A split sample is one of two equal portions of a field sample, where two parties each receive one portion for testing. Contractor split sample test results shall be provided to the Engineer before Department test results are revealed.

2.4 RANDOM SAMPLING

The procedures for random sampling are indicated in Method for Obtaining Random Samples for Concrete. Refer to Appendix F. The Engineer will provide the Contractor with random sample locations, and in a manner that doesn't give the Contractor an advantage for advance prior knowledge.

2.5 FREQUENCY OF SAMPLING AND TESTING

The frequency of sampling and testing is indicated in the Special Provisions for Quality Control of Concrete Mixtures at the Plant (Appendix A) and Quality Control/Quality Assurance of Concrete Mixtures (Appendix A). The sampling and testing frequency indicated in the two Special Provisions is a minimum. Additional sampling and testing may be necessary to control concrete production. The PCC Level I Technician should also check the Quality Control Plan for sampling and testing frequencies.

2.6 TEST METHODS

A helpful summary of various concrete test methods is provided in Appendix G.

Test results are rounded as follows:

Test Method	Rounding
Air Content	Nearest 0.1%
Slump	Nearest 1/4 in. (5 mm)
Unit Weight	Nearest 0.1 lb/ft^3 (1 kg/m^3)
Yield	Nearest 0.1 ft^3 (0.01 m^3)
Flexural Strength	Nearest 5 psi (50 kPa)
Compressive Strength	Nearest 10 psi (100 kPa)
Temperature	Nearest 1 °F (0.5 °C)

For information on testing self-consolidating concrete (SCC) or controlled low-strength material (CLSM), refer to Appendices H and I, respectively.

2.7 ADJUSTMENTS TO A CONCRETE MIXTURE AT THE JOBSITE

Tests for air content and slump shall be performed before adjusting a mix. Concrete, which is modified at the jobsite, after initial testing, shall be retested. Testing after an adjustment is very important. For example, assume a slump test at the jobsite indicated low slump. The normal adjustment would be to add water. After the adjustment, the test for slump may indicate the problem was corrected. However, the test for air content may indicate an increase which is unacceptable.

Documentation for air content and slump shall clearly indicate if these tests were performed before, or after, the addition of water or admixtures. Strength specimens shall not be molded until after the addition of all water and admixtures. If strength specimens have been made for a batch of concrete, and subsequently during discharge there is more water added, additional strength specimens shall be made for the batch of concrete according to Article 1020.11(a)(4). Concrete shall not be placed until air content and slump tests are completed. When placing concrete by pump or conveyor, indicate which tests are performed before or after transport by pump or conveyor.

Another important aspect is to do one adjustment at a time, if possible. For example, assume the slump and air content test results are low at the jobsite. By only increasing the water to adjust the slump, the additional water may be sufficient to correct the air content. Finally, the Level I PCC Technician is reminded that subsequent deliveries of concrete will have to be corrected until the adjustment is made at the concrete plant.

Refer to 6.0 “Air Content” and 7.0 “Slump” for additional information.

2.8 FLAWED TEST

Any quality control or quality assurance test determined to be flawed may be declared invalid only by the Department. The test result will be declared invalid only if proof of improper sampling or testing is provided. The test result must still be recorded and shall include the information for declaring the test invalid. This is according to the Quality Control/Quality Assurance of Concrete Mixtures (Appendix A). Refer to 16.0 “Documentation” for additional information.

3.0 HAUL TIME

Haul time shall end when the truck is emptied for incorporation of the concrete into the work according to Article 1020.11(a)(7).

3.1 NONAGITATOR TRUCKS

The maximum haul time for nonagitating trucks is 30 minutes according to Article 1020.11(a)(7).

3.2 MIXER AND AGITATOR TRUCKS

The maximum haul time for truck mixers and truck agitators according to Article 1020.11(a)(7)is as follows:

Concrete Temperature at Point of Discharge, °F (°C)	Haul Time Hours	Haul Time Minutes	
50 - 64 (10 - 17.5)	1	30	
> 64 (> 17.5)	1	0	(without retarder)
> 64 (> 17.5)	1	30	(with retarder)

When installing chain link or woven wire fence, the time limit for unloading may be extended to 120 minutes when approved by the Engineer according to Article 664.02 Note 2. The concrete shall be mixed in truck mixers or transported in agitating trucks.

3.3 PLANT TESTING

To encourage start-up testing for mix adjustments at the plant, the first two trucks are allowed an additional 15 minutes haul time whenever such testing is performed according to Article 1020.11(a)(7).

The Level I PCC Technician should be aware the extra time may cause the concrete mixture to be a little drier, when it finally arrives at the job site.

3.4 QUALITY CONTROL

Concrete shall be rejected by the Level I PCC Technician when the maximum haul time is exceeded.

4.0 MIXING

4.1 BATCH PLANTS

There are two types of batch plants, which are defined as follows:

- Dry Batch Plant - The concrete ingredients are measured by the plant and charged into a truck mixer for mixing. This operation is called **truck-mixed** or sometimes **transit-mixed** concrete.

- Wet Batch Plant - The concrete ingredients are measured and mixed by the plant, and discharged into a delivery unit. This operation is called **stationary-mixed** or **central-mixed** concrete.

A concrete batch is defined as the materials used for one mixing operation. Two batches may be needed to fill a mixer, if the largest batch that can be weighed by the plant is smaller than the amount that can be mixed. Article 1103.02(b) permits a maximum of three weighings for charging a mixer.

4.2 TRUCK REVOLUTIONS

For stationary-mixed (central-mixed) concrete, the number of truck revolutions **is not recorded** upon arrival at the jobsite, since stationary-mixed concrete is completely mixed in a stationary mixer. The concrete is delivered in a truck agitator, a truck mixer operating at agitating speed, or a nonagitator truck.

For truck-mixed (transit-mixed) concrete, the number of truck revolutions **is recorded** upon arrival at the jobsite, since truck-mixed concrete is completely mixed in a truck mixer for delivery.

For shrink-mixed concrete, the number of truck revolutions **is recorded** upon arrival at the jobsite, since shrink-mixed concrete is mixed partially in a stationary mixer and completed in a truck mixer for delivery.

If the Level I PCC Technician is required to record the number of truck revolutions, and the truck's revolution counter is not working, the concrete shall be rejected.

If additional water or an admixture is added at the jobsite, the concrete batch shall be mixed a minimum of 40 additional revolutions after each addition according to Articles 1020.11(a)(2) and 1020.11(a)(3).

To aid the PCC Level I Technician in verifying truck-mixed (transit-mixed) concrete is adequately mixed, the following information and formulas shall be used. If the total number of revolutions exceeds 300, notify the PCC Level II Technician. The concrete mixture is acceptable to place, but a slower agitating speed may be warranted.

The recording of final truck revolutions is optional.

- For truck-mixed (transit-mixed) concrete where the fine and coarse aggregates are added simultaneously to the mixer, the minimum and maximum truck revolutions (REVs) may be calculated as follows:

  $$\text{Minimum REVs} = 60 + [2 \times (T - 60/5)]$$

  Where: 60 = Minimum revolutions at plant.
  T = Number of minutes elapsed from stamping of the truck ticket.
  2 = Minimum agitating speed (REVs/minute).
  5 = Minimum mixing speed (REVs/minute).

  $$\text{Maximum REVs} = 100 + [5 \times (T - 100/MRS)]$$

  Where: 100 = Maximum revolutions at plant.
  T = Number of minutes elapsed from stamping of the truck ticket.
  5 = Maximum agitating speed (REVs/minute).
  MRS = Manufacturer's recommended mixing speed as shown on the truck plate (REVs/minute).

- For truck-mixed (transit-mixed) concrete where the fine and coarse aggregates are added separately to the mixer, the minimum and maximum truck revolutions (REVs) may be calculated as follows:

  $$\text{Minimum REVs} = 70 + [2 \times (T - 70/5)]$$

  Where: 70 = Minimum revolutions at plant.
  T = Number of minutes elapsed from stamping of the truck ticket.
  2 = Minimum agitating speed (REVs/minute).
  5 = Minimum mixing speed (REVs/minute).

  $$\text{Maximum REVs} = 100 + [5 \times (T - 100/MRS)]$$

  Where: 100 = Maximum revolutions at plant.
  T = Number of minutes elapsed from stamping of the truck ticket.
  5 = Maximum agitating speed (REVs/minute).
  MRS = Manufacturer's recommended mixing speed as shown on the truck plate (REVs/minute).

- The following table contains REV values using the above equations, assuming a mixing speed, *MRS*, of 16 revolutions per minute.

	Minimum 60 Mixing Revolutions (simultaneous charging)		**Minimum 70 Mixing Revolutions** (separate charging)	
Time, *T* minutes	**REVs, min**	**REVs, max**	**REVs, min**	**REVs, max**
10	60	119	70	119
15	66	144	72	144
20	76	169	82	169
25	86	194	92	194
30	96	219	102	219
35	106	244	112	244
40	116	269	122	269
45	126	294	132	294
50	136	319	142	319
55	146	344	152	344
60	156	369	162	369

5.0 SAMPLING

The following information is based on Illinois Modified AASHTO T 141.

Obtain the concrete sample at or near the point of discharge by the delivery equipment and prior to incorporation into the work. When placing concrete by pump or conveyor, sampling will be necessary before and after delivery by pump or conveyor. Refer to Section 6.4 for more information.

Since concrete is accepted or rejected on tests from relatively small samples of concrete, it is very important that the sample be truly representative of the concrete batch. Samples shall not be obtained from the first 4 ft^3 (0.1 m^3) or from the last 4 ft^3 (0.1 m^3) of discharged concrete.

Occasionally, dry, sandy material may be discharged within the first 1/4 cubic yard (1/5 cubic meter). Concrete containing dry, sandy material shall be discarded before obtaining the sample.

When performing temperature, slump, and air content tests, a sample is normally taken immediately after 4 ft^3 (0.1 m^3) of concrete has been discharged unless dry, sandy material is encountered.

The size of sample is dependent on the type and number of tests to be conducted. For air and slump tests, small samples are sufficient. If strength specimens are to be made, larger samples are required. Do not be concerned with wasting small amounts of concrete.

For front discharge trucks, field experience indicates a better representative sample can be obtained by coating the interior discharge blades near the discharge opening. Expel the concrete until discharge is imminent, then move the concrete back to the original mixing position. Do this twice before discharging the concrete to obtain a sample.

Once the sample is obtained, move to a suitable location for performing tests and molding strength specimens.

Since the determination of concrete temperature shall be completed within 5 minutes of obtaining the sample, it is good practice to insert the thermometer into the concrete immediately.

The slump and air tests shall be started within 5 minutes of obtaining the sample. (Note: Per Article 1020.12 for mobile portland cement concrete plants, it states: “Slump and air tests made immediately after discharge of the mix may be misleading, since the aggregates may absorb a significant amount of water for four or five minutes after mixing.” Therefore, in this situation, it is recommended to wait a minimum of 4 minutes before the start of slump and air tests.) Since the slump test shall be completed within 2 1/2 minutes, it is best to determine slump before starting the air test.

If strength specimens are necessary, molding shall begin within 15 minutes of obtaining the sample. When placing concrete by pump or conveyor, the Level I PCC Technician should obtain field samples for strength specimens at the discharge end when there is an air content gain. If there is an air content loss, sampling at the discharge end is optional. Refer to 6.4 “Air Content Loss” for additional information.

6.0 AIR CONTENT

All concrete contains some amount of air. Air in concrete is either “entrapped” or “entrained”. Entrapped air is not effective for improving concrete quality. Entrained air improves concrete quality by providing extremely small air chambers, which relieve pressures caused by freezing water. Entrained air also improves concrete’s resistance to scaling caused by deicing salt. Concrete with entrained air has better workability, higher slump, less segregation, less bleed water, and reduced bleed time. Concrete with entrained air is more cohesive, but may be a “sticky” mixture.

Entrapped air bubbles, which are typically irregular in shape, are defined as bubbles equal to or greater than 1 mm in diameter. Entrapped air will range from 0.5 to 3 percent, but typically 1.5 to 2 percent entrapped air typically remains after the concrete is consolidated.

Entrained air bubbles, which are spherical or almost spherical in shape, are defined as bubbles smaller than 1 mm in diameter. Entrained air is normally produced by adding an air-entraining admixture to the concrete during mixing. Entrained air is rarely produced by using an air-entraining cement.

For air-entrained concrete, an air-entraining admixture does not create air bubbles. Air bubbles are created by the mixing process. The shearing action of the mixer blades breaks up large bubbles. An air-entraining admixture retains air in a mixture, by producing a film around the air bubbles. During mixing, these stable air bubbles are less likely to break and escape.

6.1 VARIATIONS

6.1.1 General

Air content variations may result if any of the following are changed:

- Aggregate Characteristics
- Cement Characteristics
- Finely Divided Mineral Characteristics
- Admixtures
- Water Characteristics
- Batching Sequence
- Mixing Equipment Condition
- Mixer Capacity vs. Amount of Concrete
- Mixing Speed
- Mixing Time or Revolutions
- Air or Concrete Temperature
- Haul Time
- Transportation/Handling Method

Another important consideration for air content variations is the amount of water in a concrete mixture. Increasing the water batched at the plant, or retempering with water at the jobsite, will improve the effectiveness of an air-entraining admixture.

6.1.2 Pressure Meter

The pressure test method is intended for use with concrete using relatively dense aggregates. The test is not applicable to concrete containing lightweight aggregates, high porosity aggregates, or air-cooled blast-furnace slag. Sources of test error using the Type A or B meter typically involve the following:

- Improper consolidation.
- Pressure gauge malfunction.
- Petcock leak.
- Improper fit of lid with bowl because of unclean surface.

6.1.3 Volumetric Meter

The volumetric test method is applicable to concrete using any type of aggregate, whether it be dense, lightweight, high porosity, or air-cooled blast-furnace slag. Sources of test error using the volumetric meter typically involve the following:

- Improper rolling to dispel air from concrete.
- Using another alcohol instead of 70 percent by volume isopropyl alcohol.
- Insufficient time for stability of reading.

6.2 QUALITY CONTROL

Except for Class SC concrete (air entrainment optional) and bridge deck latex concrete overlay, all concrete and cement aggregate mixture II shall contain entrained air. The Level I PCC Technician should be aware that latex modified concrete does not require entrained air, but some air is entrained by the latex. For the air content range, refer to Articles 285.05, 312.26, and 1020.04. Also refer to the bridge deck fly ash or ground granulated blast-furnace slag overlay, microsilica overlay, high-reactivity metakaolin overlay, and latex concrete overlay Special Provisions. Normally, concrete mix designs are based on the midpoint value of the air content range.

As a result of the mix design and variations of air content within a batch of concrete; air should be maintained near the midpoint of the specification range. Refer to 6.4 “Air Content Loss” for additional information.

In addition to the requirements of 2.4 “Frequency of Sampling and Testing”, the following are guidelines for air content testing at the jobsite:

- Increased tests are recommended at the beginning of a project, until test results remain fairly constant.

- A test should be performed when there is a sudden loss in slump, development of finishing difficulties, increased bleed water, increased segregation, or a loss in yield. These are indications of lower air content. A test should also be conducted when there is a sticky mixture. This is an indication of high air content.

- A test should be performed anytime there is a change in materials, equipment, or operations.

- Testing is advisable when any new shipment of material is used, especially a new shipment of air-entraining admixture.

6.3 ADJUSTMENTS

Air content not within the specification limits may be adjusted. The Level I PCC Technician shall reject the batch of concrete if the attempt to adjust the air content is unsuccessful for meeting the specification limits.

6.3.1 Low Air

If the air content obtained is below the minimum specification limit, the procedure to increase air content is as follows:

- Add a sufficient quantity of an approved air-entraining admixture. Normally, 1 oz. (40 ml) of admixture per cubic yard (cubic meter) of concrete will raise the air content 1 percent. Mix the air-entraining admixture with approximately 3 to 5 gallons (10 to 20 liters) of water in a bucket and pour over the concrete. To do this, it may be necessary to ask the driver to move the concrete to the rear of the drum with discharge imminent. The Level I PCC Technician is advised the water will increase slump, and the resulting higher air content will increase slump. Therefore, the water shall be adjusted accordingly to comply with the upper specification limit for slump. Refer to 7.3.1 “Low Slump” for additional information. It should also be noted that for slipform concrete, it may not be possible to adjust the air without affecting the slump too much. In this case, the best alternative is to mix the concrete an additional 40 revolutions to help increase the air content.

- Mix the concrete a minimum of 40 revolutions at mixing speed. The mixing speed for the truck mixer shall be per the manufacturer’s rating plate. To ensure folding of the mixture to generate air, do not mix too fast because the centrifugal force may pin the mixture to the side of the drum.

- Retest the air content and slump.

- Notify the Level II PCC Technician at the plant and discuss if changes are warranted.

6.3.2 High Air

If the air content is above the maximum specification limit, the Contractor may have the concrete further mixed, within the limits of time and revolutions specified, to reduce the air content. However, further mixing is most appropriate for a vinsol resin type air-entraining admixture. In the case of a synthetic air-

entraining admixture, the more common practice is to stop agitation for 10 to 20 minutes. After the waiting period, mix the concrete 20 to 30 revolutions. If you are 3 percent or more over the air limit, it is very doubtful you will be able to get the concrete mixture back within the specification limits.

The Level I Technician is advised that the efforts to reduce air content will also result in a lower slump.

6.4 AIR CONTENT LOSS

If a pump or conveyor is used for placement, a correction factor shall be established to allow for a loss of air content during transport. The concrete is tested before and after transport by the pump or conveyor, to establish the correction factor. The correction factor is then applied to concrete which is tested before transport, but not after transport, for record keeping purposes.

The air content should be near the midpoint of the range, after the correction factor has been applied. If the air content is not near the midpoint, adjustments are needed at the plant. Subsequent test comparisons to check the correction factor are warranted when significant changes in temperature, distance, pump or conveyor arrangement, and other factors have occurred.

If air content tests indicate significant air loss, the problem should not be solved by increasing the air content above the upper specification limit. A lower slump concrete or change in pump/conveyor arrangement can cause less air loss. Thus, the air content at the discharge end would exceed the upper specification limit. The best alternative is to reduce air loss by changing the pump/conveyor arrangement, or by making minor mix adjustments at the plant.

Per Article 503.07, an accessory or accessories shall be incorporated in the discharge components to minimize air loss. Typically an elbow or reducer is used. The elbow configuration will normally consist of two elbows with 90 degree bends connected to make an “S” shape. The reducer will narrow the diameter from one end to the other, such as from 5 in. (127 mm) to 4 in. (102 mm). At the very end of the pump is a rubber hose, which is less hazardous to personnel than metal accessories.

Other methods for reducing air loss in pumped concrete are to reduce height of free fall, reduce boom angles, keep pumping pressure low, use slow rate of pumping, and reduce friction on hose walls.

The Level I PCC Technician is cautioned that as a result of pumping, the air content has been observed to increase or remain unaffected. However, the typical air content loss is 2 to 3 percent for pumped concrete. For concrete transported by conveyor, the typical air content loss is up to 1 percent for distances less than 3000 ft. (914 m).

6.5 AGGREGATE CORRECTION FACTOR

The air content determined according to Illinois Modified AASHTO T 152 includes air in the concrete, and air held in the pore spaces of the aggregate particles. To determine only the air in the concrete, a correction factor is needed. The Department will provide the aggregate correction factor to the Contractor.

6.6 GENERAL

If air content increases 1 percent, compressive strength will decrease approximately 2 percent to 6 percent, flexural strength will decrease approximately 2 percent to 4 percent.

If air content decreases 1 percent, yield will decrease 1 percent, slump will decrease approximately 1/2 in. (13 mm), and concrete durability will decrease. Durability includes the resistance to freezing and thawing, and the resistance to deicing salt.

6.7 CARE OF DEPARTMENT MADE TYPE "A" AIR METERS (For IDOT Personnel)

To reduce weight, the Department manufactures the apparatus from a magnesium alloy which may corrode under prolonged contact with water. Observance of a few simple rules is necessary for the preservation of the Department's Type "A" air meter:

- The apparatus must be cleaned and wiped dry after each use.
- Under no circumstances should it be assembled and stored with moisture on the inside.
- It should not be used as a water bucket in connection with other tests.
- Avoid damaging the rim of the air meter pot to ensure the rubber gasket seals properly.

7.0 SLUMP

A concrete mixture must have workability, consistency, and plasticity which are suitable for job conditions. Workability is a measure of how easy or difficult it is to place, consolidate, and finish concrete. Consistency is the ability of freshly mixed concrete to flow. Plasticity determines concrete's ease of molding. A plastic concrete mixture will maintain suspension of the aggregates, and therefore the mixture is not likely to segregate during transportation/handling. Segregation occurs when the coarse aggregate separates from the mortar. Mortar consists of fine aggregate, cement, finely divided minerals, water, and air.

The slump test is used to determine the consistency of concrete. The types of consistency are stiff (low slump or poor flow) and fluid (high slump or excellent flow). The slump test is an indication of workability and plasticity, but should not be used to compare mixtures of different proportions. In addition, the slump test is not a good indicator of workability for a concrete mixture containing fiber reinforcement or high fines. In regards to high fines, an FA 20 is a good example of this.

7.1 VARIATIONS

Slump variations may result if any of the following are changed:

- Aggregate Characteristics
- Cement Characteristics
- Finely Divided Mineral Characteristics
- Admixtures
- Water
- Mixing Equipment Condition
- Mixing Speed
- Mixing Time or Revolutions
- Air or Concrete Temperature
- Haul Time
- Transportation/Handling

7.2 QUALITY CONTROL

Per Article 1020.04, different slump ranges are specified for different construction applications. Any change in slump is an indication that something has changed in the concrete mix. For example, assume the aggregates are of uniform consistency, and a fixed quantity of water has been added. A change in slump could indicate variations in aggregate gradations or air content, or errors in batching.

When a truck mixer arrives at the jobsite, listening to the noise that the mixer drum makes can be helpful. If the drum makes a swoosh noise as it turns, the mixture is less likely to need water than if a rattling noise is heard. However, do not guess a slump. Perform the test for accurate results to adjust the mixture.

In addition to the requirements of 2.4 “Frequency of Sampling and Testing”, the following are guidelines for slump testing at the jobsite:

- Increased tests are recommended at the beginning of a project, until test results remain fairly constant.
- A test should be performed anytime there is a change in materials, equipment, or operations.
- Testing is advisable when any new shipment of material is used.

Good quality control of water and air content are two aspects needed to produce uniform consistency (slump). A good mixture will contain no more water than is necessary to produce concrete which is workable and plastic. Therefore, do not add unnecessary water.

When placing concrete by pump or conveyor, a correction factor for slump loss or gain is optional. Refer to Section 6.4 for additional information.

7.3 ADJUSTMENTS

Slump not within the specification limits may be adjusted. The Level I PCC Technician shall reject the batch of concrete if the attempt to adjust the slump is unsuccessful for meeting the specification limits. However, the Engineer has the option to permit the use of the batch of concrete represented. Refer to Article 1020.07 for additional information.

7.3.1 Low Slump

If the slump obtained is below the minimum specification limit, the procedure to increase slump is as follows:

- Add a sufficient quantity of water. Normally, 1 gallon (5 liters) of water per cubic yard (cubic meter) of concrete will raise the slump 1 in. (25 mm). The addition rate for increasing slump will normally increase air content 0.5 to 1 percent. This is a result of more water available, which improves the effectiveness of the air entraining admixture.
- Mix the concrete a minimum of 40 revolutions at mixing speed. The mixing speed for the truck mixer shall be per the manufacturer’s rating plate.

- Retest the slump and air content.

- Notify the Level II PCC Technician at the plant and discuss if changes are warranted. Constant retempering at the jobsite will slow down production.

- After the slump has been adjusted, no more water should be added during discharge of the concrete. Any additional water will change the water/cement ratio of the remaining batch of concrete. Refer to 2.7 “Adjustments to a Concrete Mixture at The Jobsite” and 7.4 “General” for additional affects of adding water.

7.3.2 High Slump

If the slump obtained is above the maximum specification limit, the Contractor may mix the concrete an additional 40 to 60 revolutions at mixing speed. This is to ensure the concrete is properly mixed upon arrival at the jobsite. Mixing speed is discussed in 7.3.1 “Low Slump.” The Contractor shall then retest the slump. If the test fails, the concrete shall be rejected unless the Engineer permits the use of the batch of concrete represented. Notify the Level II PCC Technician at the plant and discuss if changes are warranted.

An isolated case of high slump can sometimes be attributed to incomplete discharge of all wash water in the truck mixer, or a wet spot in the aggregate stockpile. A wet spot in the aggregate stockpile may result from recently delivered material.

NOTE: In the case of self-consolidating concrete where a high slump flow is obtained, letting the truck mixer sit and agitate may help to reduce the slump flow. In some instances, a viscosity modifying admixture is added to reduce the slump flow. Refer to 11.6 “Viscosity Modifying Admixture” for more information. It should also be mentioned that self-consolidating concrete mixtures are more sensitive to water adjustments.

7.4 GENERAL

Adding 1 gallon (5 liters) of water per cubic yard (cubic meter) will have the following affects on concrete:

- Compressive strength will decrease approximately 200 to 300 psi (1,380 to 2,070 kPa).

- Shrinkage potential will increase approximately 10 percent.

- The tendency of the mix to segregate may increase.

- Initial set time will be delayed.

- Durability will decrease. For example, the concrete will be less wear resistant, less watertight, less resistant to deicing salt, and less resistant to freezing and thawing.

7.5 RETEMPERING WITH WATER

7.5.1 RESTRICTION

Article 1020.05(b) allows a cement factor reduction for some classes of concrete. If the mix design has less than 565 lbs/cu.yd. (335 kg/cu. m.) of cement and finely divided minerals summed together, no water may be added at the jobsite for central–mixed concrete according to Article 1020.11(a)(4). The Level II PCC Technician shall inform the Level I PCC Technician when additional water is not permitted.

7.5.2 CAUTION

The late addition of water to a batch of concrete can cause air void clustering around aggregate particles. This may cause above normal decreases in strength.

8.0 UNIT WEIGHT/YIELD

The unit weight test is used to check the accuracy of proportioning, by determining the yield of concrete. Yield is defined as the volume of freshly mixed concrete from a known quantity of materials.

8.1 VARIATIONS

A lower unit weight/higher yield may indicate any of the following have changed:

- The aggregates may have a lower specific gravity.
- The air content may be higher.
- The water content may be higher.
- The cement factor may be lower.
- The proportion of ingredients may have changed.
- The weighing devices may not be operating properly.

A higher unit weight/lower yield would indicate opposite trends, and is costly to the Contractor because there is a deficiency of concrete volume.

8.2 QUALITY CONTROL

In addition to the requirements of 2.4 “Frequency of Sampling and Testing”, the following are guidelines for unit weight/yield testing at the jobsite. However, the test is normally performed at the plant.

- Perform the test to check scale accuracy, scale sensitivity, and water measurement.
- Perform the test as needed to check aggregate uniformity. For aggregate uniformity, a change in the test may indicate a change in aggregate gradation particle shape or specific gravity.
- A test should be performed after initial adjustment of the mix water.
- A test should be performed after adjustment of the batch weights.
- A test should be performed any time there is a discrepancy in the yield (i.e., a shortage or overrun of concrete).

When performing the unit weight/yield test, the scale must be accurate, the bucket must be properly calibrated, and a flat plate must be used for strike-off. This will prevent discrepancies in the test results.

8.3 ACCURACY

An investigation into the accuracy of proportioning is warranted when the measured yield is not within ± 1 percent of the theoretical yield. If the measured yield is not within the theoretical yield, based on one test, it is important to do a retest. Perform the second test on a different batch of concrete. If the second test fails, it can be concluded that the first test was not an anomaly.

The following is an example when **only yield has been measured** on a batch of concrete.

English:

Design Batch Size	= 6.0 cubic yards
Mix Design Air Content	= 6.5%
Theoretical Yield	= 162.0 cubic feet
Theoretical Yield ± 1%	= 160.4 to 163.6 cubic feet
Measured Air Content	= Assume 6.5% since not measured.
Measured Yield	= 162.9 cubic feet (O.K.)

Metric:

Design Batch Size	= 6.00 cubic meters
Mix Design Air Content	= 6.5%
Theoretical Yield	= 6.00 cubic meters
Theoretical Yield ± 1%	= 5.94 to 6.06 cubic meters
Measured Air Content	= Assume 6.5% since not measured.
Measured Yield	= 6.01 cubic meters (O.K.)

The following is an example when **yield and air content have been measured** on the same batch of concrete. (Note: If time is available, it is preferable to always perform an air content test when determining yield. The air content test will help provide a more accurate theoretical yield.)

English:

Design Batch Size	= 6.0 cubic yards
Mix Design Air Content	= 6.5% (or 0.065)
Theoretical Yield	= 162.0 cubic feet
Measured Air Content	= 6.3% (or 0.063)

$$\text{Corrected Theoretical Yield} = \frac{(1 - \text{Mix Design Air Content}) \times (\text{Theoretical Yield})}{(1 - \text{Measured Air Content})} = \frac{(1 - 0.065) \times (162.0)}{(1 - 0.063)} = 161.7\ \text{ft}^3$$

Corrected Theoretical Yield ± 1% = 160.1 to 163.3 cubic feet
Measured Yield = 160.0 cubic feet (Investigate)

Metric:

Design Batch Size	= 6.00 cubic meters
Mix Design Air Content	= 6.5% (or 0.065)
Theoretical Yield	= 6.00 cubic meters
Measured Air Content	= 6.7% (or 0.067)

$$\text{Corrected Theoretical Yield} = \frac{(1 - \text{Mix Design Air Content}) \times (\text{Theoretical Yield})}{(1 - \text{Measured Air Content})} = \frac{(1 - 0.065) \times (6.00)}{(1 - 0.067)} = 6.01\ \text{m}^3$$

Corrected Theoretical Yield ± 1% = 5.95 to 6.07 cubic meters
Measured Yield = 5.90 cubic meters (Investigate)

9.0 CONCRETE STRENGTH

One of the most important properties of concrete is its strength. The purpose of strength testing is to verify the strength potential of the concrete. For most concrete construction, a compressive strength of 3,500 psi (24,000 kPa), or a flexural strength of 650 psi (4,500 kPa), at an age of 14 days is required. Refer to Article 1020.04 for additional information.

Note: For compressive strength cylinders, only 6 x 12 in. (152 x 305 mm) are allowed. The use of 4 x 8 in. (102 x 203 mm) is not allowed by the Department at this time because strength test results are typically 6 to 9 percent higher than 6 x 12 (152 x 305 mm) cylinders. In addition, 4 X 8 in. (102 x 203 mm) cylinder strength test results are more variable.

9.1 MOLDING STRENGTH SPECIMENS

After each time steel beam forms are used, they should be cleaned of concrete and coated with form release. Store the forms upside down to drain excess form release, and to keep the forms' interiors clean of dust and debris.

As soon as a strength specimen has been molded, it should be properly identified by writing on the outside of the cylinder or beam mold. Beam specimens may also be identified by inserting a weatherproof tag at one end of the mold. Do not scratch identification markings into the freshly molded specimen, as this will influence test results. When the strength specimen is removed from the mold, attach the identification tag to the specimen or mark the specimen with waterproof ink.

Any movement of a cylinder or beam within the first few hours after molding may be detrimental to strength. Thus, it is important that the specimens are molded in a place where they will not be disturbed. If this is not possible, move them to a safe place immediately after molding.

9.2 CURING STRENGTH SPECIMENS

Strength specimens shall be protected from evaporation and cured in the field (initial curing) for no longer than 48 hours. After that, the specimens are moved to the laboratory for final curing. However, per Illinois Modified AASHTO T 23, strength specimens shall be field cured with the construction item as follows:

- Whenever the Contractor desires to open the pavement or shoulder to traffic prior to 14 days from the time of concrete placement.
- Whenever pavement patching or bridge deck patching is performed.
- As directed by the Engineer. The need to field cure strength specimens with the construction item is appropriate when the curing temperature experienced in the field will be significantly different from the curing temperature experienced in the laboratory. This will most often occur for work done in the spring and fall. In this situation, it is not unusual for field air temperatures to be low, but not low enough to require cold weather concrete protection. As an example, a cement only concrete mix that is cured in the field at 55 °F (13 °C) will have significantly lower strengths at 3, 7, and 14 days than concrete cured in the laboratory at 73 ± 3 °F (23 ± 2 °C). However, by 28 days, the concrete cured in the field should have comparable strength to the concrete cured in the laboratory.

Therefore, it is important for the Engineer to consider daily high and low temperatures, temperature of the delivered concrete, insulation benefit obtained from the forms and curing method, and the heat of hydration generated from the size of the pour. These factors will determine if field curing of strength specimens is warranted.

It should be noted that strength specimens cured in the field shall be in the same manner as the pavement or structure, which may include such things as insulation if used.

9.2.1 Initial Curing

Per Illinois Modified AASHTO T 23, the strength specimens shall be field cured during the first 48 hours in a temperature range from 60 to 80 °F (16 to 27 °C). This is known as "initial curing" and should not be confused with strength specimens that are cured with the construction item. Refer to 9.2 "Curing Strength Specimens" for requirements when curing strength specimens with the construction item.

Strength specimens should always be placed in a shaded area. Department specifications require a field curing box when an air temperature below 60 °F (16 °C) is expected during the initial curing period. The device may be insulated or power operated. Insulated devices may consist of a cooler, but such devices are subject to theft. Therefore, nondescript insulated boxes are recommended.

In the case of very hot weather where temperatures may be above 80 °F (27 °C) at night, refer to Illinois Modified AASHTO T 23 for cooling options to keep the strength specimens in the specified temperature range. Power operated curing boxes for cooling are available, but also are expensive.

The Level I PCC Technician is advised that curing within the specified 60 to 80 °F (16 to 27 °C) range during the first 48 hours is critical to proper strength development. Any curing above or below the specified range will result in lower strength test results at 14 days, which is the test of record most frequently specified. However, if the test of record is specified to be 28 days, any curing above the specified range will result in lower strength test results at 28 days. Any curing below the specified range will result in higher strength test results at 28 days, since cool temperatures are beneficial to strength development when sufficient time is allowed.

9.3 TRANSPORTING STRENGTH SPECIMENS TO FINAL CURING LOCATION

Careful handling and transportation of strength specimens to the location for final curing will avoid adverse test results. The following items are important to remember.

- Take measures to avoid impacts and jarring, when handling and transporting strength specimens. This can be accomplished by providing suitable cushioning material for the strength specimens. Typically, straw or burlap is used.

- Do not expose the strength specimens to cold or freezing temperatures. For example, transporting strength specimens in the open bed of a pickup is not a good idea. Especially on a cold day.

- Do not allow the strength specimens to incur moisture loss. This can be accomplished by wrapping the strength specimens in plastic, or covering the strength specimens with wet burlap.

9.4 CURING IN SATURATED LIME WATER

Curing strength specimens in a water storage tank requires saturated lime water. Use hydrated lime, such as type CH, according to ASTM C 911. This will prevent the leaching of lime from within the strength specimen, which can affect the properties of the concrete. A saturated solution is defined as the maximum amount of solute (hydrated lime) which will dissolve in a solvent (water).

To determine the amount of hydrated lime required, it is known that approximately 0.2 percent dissolved hydrated lime will produce a saturated solution. This calculates to be 0.017 pounds per gallon (2 grams per liter). Use 0.025 pounds per gallon (3 grams per liter). Stir the hydrated lime thoroughly in the water, allowing the excess to settle. The excess on the bottom will ensure the solution remains saturated. Thereafter, stir the water in the storage tank monthly, and replace the water and hydrated lime after 24 months.

9.5 QUALITY CONTROL

Strength is defined as the average of at least two cylinder or beam breaks for field testing. A single beam may be used for two breaks if it is 29 3/4 in. (756 mm) or greater in length. Department specifications normally require the test of record to be performed on the 14th day after molding. Additional strength testing to determine early falsework and form removal, early pavement or bridge opening to traffic, or to monitor strengths is at the discretion of the Contractor.

9.6 HAND PUMP BEAM BREAKER

A hand pump beam breaker may be used according to Illinois Modified AASHTO T 177. The following items are important to know when using the hand pump beam breaker:

- A hand pump beam breaker is to be calibrated every 12 months. After calibration, measures should be taken to avoid impacts and jarring when transporting the beam breaker. Transporting the beam breaker can alter the calibration.

  When the beam breaker is delivered to the test site, it should be placed in a location which does not require any further movement.

- A hand pump (manually operated) beam breaker can cause more variability in test results than a mechanically operated breaker. Therefore, a hand pump beam breaker must be operated in a consistent and accurate manner. The Department test procedure for a hand pump beam breaker is as follows:

Fins that may have formed in finishing the beam shall be removed. The beam shall be placed in the machine, with the formed sides in contact with the loading crosshead and reaction rollers, (i.e., finished side vertical). The beam shall be inserted to engage properly the bottom rollers, and shall have a minimum of 1 in. (25 mm) overhang. The beam shall be properly centered on the bottom rollers. The hand wheel is then rotated to bring the loading crosshead firmly into contact with the beam. The release valve is then closed fingertight by turning it clockwise, and the gauge check valve is placed in the "ON" position. The pump is then operated continuously and without shock. The load shall be applied rapidly until approximately 50 percent of the estimated breaking load is obtained. Thereafter, the load rate shall be 150 ± 25 psi/min. (1,035 ± 175 kPa/min.) until rupture occurs. The reading of the hydraulic gauge is then recorded, the gauge check valve brought to the "OFF" position, the release valve opened by turning it counterclockwise, and the hand wheel rotated to raise the loading crosshead. When using the 30 in. (762 mm) long beam, the remaining length is inserted for the second break. The same test procedure is used. **Note for Department Made Beam Breaker:** If during the test a value of 1,000 psi (6,900 kPa) flexural strength is obtained, and the beam has not ruptured, testing may be discontinued to avoid damage to the hand pump beam breaker. The value shall be recorded as 1,000+ psi (6,900+ kPa). For a minimum design flexural strength that is greater than 800 psi (5,500 kPa), the Department made beam breaker should not be used.

The following are tips to reduce the test differences between the Department and the Contractor, when using a hand pump beam breaker.

- Store Department and Contractor beam strength specimens in the same water storage tank.

- Test beam strength specimens at the same age. For example, a difference would occur if the Department conducted a 14 day test in the morning, and the Contractor conducted the test late in the afternoon. This tip would also be applicable to cylindrical strength specimens.

- Place Department and Contractor hand pump beam breakers at the same location. This allows the beam strength specimens to be broken at the same time, but more importantly, this allows one individual to imitate the pumping procedure of the other individual.

9.7 CARE OF DEPARTMENT MADE BEAM BREAKER (For IDOT Personnel)

This machine, where feasible, is constructed of lightweight materials (magnesium, aluminum) which are not subject to rusting. It nevertheless should be kept protected against the elements and damage when not in use.

The hydraulic pump is built to withstand rugged usage over an extended period. Use hydraulic jack oil when additional hydraulic fluid is needed. When adding oil, remove the filler plug and tilt the machine so that the pump cylinder is upright. The oil should not be permitted to rise above the notch on the filler plug's stem. Occasionally, the pump shall be completely drained of oil and flushed with kerosene before refilling.

It is possible that air might get into the system, hindering its proper operation. To remove the air:

- Close the release valve and activate the pump until the ram plunger is fully extended.
- Open the release valve and push the plunger up by hand.
- Operate the pump handle rapidly for 8 to 10 strokes. Repeat this same procedure if necessary.

In order to avoid airlocks, the hydraulic beam breaker should be stored on its side with the check valve off and the release valve open.

Occasional lubrication of the rollers through the fittings is necessary. All other lubrications are by sealed system. Set screws on the rollers should be checked occasionally to make sure they are tight.

9.8 LOW STRENGTH

9.8.1 Investigating Low Strength Concrete

Low strength results require careful investigation to prevent unnecessary in-place strength testing. For example, a majority of low strengths are a result of improper handling and testing of the strength specimens. A cone fracture of a cylinder strength specimen tested in compression is normal, but other fracture types may indicate improper consolidation or handling of the specimen.

An investigation for low strength results should include the following:

- Was the correct mix design used?
- Were the correct batch weights used?
- Were the correct materials loaded within their respective bins or silos?
- Was the correct admixture dosage used? For a severe overdose of retarder, it may take several days for the concrete to harden. Even if a normal dose of retarder has been used, the retarder in combination with a mixture containing fly ash and cement may, in rare occasions, result in a severe delay in strength gain. This also applies to a ground granulated blast-furnace slag and cement mixture.
- Was the air-entraining admixture a vinsol resin or synthetic type? For comparable air contents, a compressive strength reduction of 20 percent or more may occur when a vinsol resin is replaced with a synthetic type. When a synthetic type admixture is used, air bubbles may accumulate around aggregate particles, reducing the bond strength between the aggregate and surrounding mortar. Thus reducing compressive strength. The clustering of air bubbles around aggregate particles is more likely to occur for mixes that have high air content, longer mix times, and have been retempered with water.

- Were quality materials used? For example, a change in cement, finely divided minerals, or aggregate can lower strength. A consistent aggregate gradation is also important.

- Was the concrete adequately mixed? Worn mix blades, mixer overloading, improper batch sequence, and inadequate mixing time can lower strength.

- Were the aggregate moisture contents determined accurately at the plant?

- How much water was added at the jobsite? Sometimes too much water can be added due to a long haul time, delays in concrete placement, or requests for wet concrete. A good practice is to determine the weight (mass) of the strength specimen before testing. A lower weight (mass) may indicate the strength specimen had a high water content because water has a much lower density than concrete.

- What was the air content? A high air content will lower strength. A good practice is to determine the weight (mass) of the strength specimen before testing. A lower weight (mass) may indicate the strength specimen had a high air content.

- What was the concrete temperature? A high concrete temperature will lower long term strength.

- Was the concrete sampled correctly?

- Was the strength specimen molded correctly? For example, an identification number shall not be inscribed in the surface of the concrete specimen. In addition, weighing a strength specimen before testing is a good way to check for degree of consolidation (i.e. effort and technique). A lower weight (mass) may indicate the strength specimen was poorly consolidated.

- What is the quality of the cylinder molds? A cylinder mold which has a non-flat bottom will lower strength because of uneven loading by the test apparatus. A cylinder mold which is not round will lower strength. Thus, it is a good practice to check cylinder diameter.

- Were the strength specimens moved within the first few hours of molding? Movement of a specimen during this time period can lower strength.

- Were the strength specimens properly cured to prevent evaporation during the first 24 hours after molding?

- Were the strength specimens field cured within the 60 to 80 °F (16 to 27 °C) temperature range that is required for initial curing? Remember that concrete mix designs with fly ash or ground granulated blast-furnace slag will have slower strength gain when exposed to low curing temperatures.

- Were there any delays in bringing the strength specimens to the laboratory for wet curing? A longer period of continuous curing in dry air will lower strength.

- Were the strength specimens handled and transported properly? Refer to 9.1 "Transporting Strength Specimens."

- At the laboratory, were the strength specimens properly wet cured and within the required temperatures?

- Were the cylinder strength specimens properly capped, or ends properly prepared? The end of a specimen should be sawcut when there is aggregate loss along the perimeter of the cylinder.

  If bonded caps are used, make sure the material is qualified for the concrete strength. In addition, ensure the cylinder ends are sufficiently flat and perpendicular (to the cylinder axis) to preclude excessive cap thickness.

  For unbonded pad caps, make sure the cylinder ends are sufficiently flat and perpendicular to the cylinder axis. In addition, make sure the pads are of the correct hardness and in acceptable condition. Worn pads may reduce cylinder strength, but usually not a significant amount.

- Were proper procedures used for breaking the strength specimens?

  For example, allowing strength specimens to dry before testing can increase strength for cylinders but lower it for beams. In addition, improper cylinder alignment in a load-testing machine will lower strength. Make sure the loading surfaces of the testing machine are plane, and the dimensions of the spherically seated head satisfy requirements. In addition, make sure the spherically seated head is properly lubricated to allow rotation upon contact with the cylinder but will remain fixed during loading. Do not use grease as a lubricant for the spherical head.

  Make sure the cylinder is properly centered in the testing machine.

  Make sure the loading rate is within the requirements. A slow loading rate may produce a lower strength, and a fast loading rate may produce a higher strength.

  Make sure the cylinder was in fact loaded to its ultimate capacity.

  Finally, make sure the machine has been properly calibrated.

- Does the strength specimen have any unusual defects or contain foreign material? For example, the Department determined a low cylinder strength test result to be caused by a mudball. Refer to 14.0 "Identifying Problems With A Concrete Mixture" for additional information.

- Was there anything unusual about the cylinder break? For example, a shear break may indicate unleveled capping or rotation of a platen. Vertical cracks through the cap or a chip off the side may indicate improper load distribution. An asymmetric failure may indicate the cylinder was not properly centered in the testing machine.

- Finally, failure along a layer may indicate improper consolidation of a cylinder or beam.

9.8.2 Suggested Guidelines to Follow after a Low Strength or Invalid Test Result Occurs

After a low strength or invalid strength test for concrete is confirmed per an investigation according to 9.8.1 "Investigating Low Strength Concrete", Article 105.03 will apply and the Contractor may submit a proposal to the Engineer (Resident Engineer/Technician) to prove the concrete is acceptable. The proposal may be accepted or rejected. The following guidelines are for informational and training purposes only. The District or Local Agency administering the contract will make the final determination on how to evaluate a low strength or invalid test result for concrete. **In addition, concrete which does not obtain the required strength in the specified time frame shall not be considered inferior. If the concrete is subsequently determined to be acceptable, long term performance and durability of the concrete is not expected to be diminished.**

9.8.2.1 Location of Unacceptable Concrete

Pour records will be examined by the Engineer to determine the location of the unacceptable concrete. Concrete batched prior to or after the batch in question will also be evaluated to determine if it should be included with the questionable batch. The questionable batch of concrete may be determined to be an isolated incident, such as when it has a higher water or air content when compared to the other batches of concrete.

9.8.2.2 Consultation with Engineer of Record

Once the unacceptable concrete boundaries are determined, the Engineer of Record (designer) for a structure or pavement will be notified. The Engineer of Record is responsible for determining structural adequacy and has liability for the design. **Concrete with questionable strength is never to be accepted unless the Engineer of Record has examined the investigation and given approval for structural adequacy.** For acceptance of the concrete, the Engineer of Record needs proof that the allowable stresses will not exceed the design value for the structure or pavement. The Engineer of Record may also make recommendations during the investigation process.

In regards to median, sidewalk, slope wall, paved ditch, or other concrete that is a low risk for vehicular traffic loading, the Engineer of Record does not necessarily need to be notified. In these cases the District or Local Agency will normally perform the review according to Article 105.03.

Note: For State projects, the Engineer of Record is normally the Bureau of Bridges and Structures (BBS), but BBS will also coordinate when appropriate, an investigation into concrete strength with the Engineer of Record. For Local Agency projects, the Engineer of Record may be the Local Agency, or a Consultant hired by the Local Agency, or the Bureau of Bridges and Structures when the Local Agency requests assistance.

9.8.2.3 Methods for Evaluating Unacceptable Concrete

The Contractor has several options to include in a proposal for showing the concrete in question may be accepted.

9.8.2.3.1 Coring

The most frequent method to show concrete is acceptable is through coring. The core provides the actual in situ strength of the concrete, and is an indication of the quality of consolidation and curing. The molded strength specimen is only an indication of the mixture's strength potential. When concrete is cored, AASHTO T 24 "Obtaining and Testing Drilled Cores and Sawed Beams of Concrete" is followed. The Contractor shall obtain permission from the Engineer to core the concrete. The Engineer of Record is normally consulted to determine the number of cores, location, and their orientation. This will also assure the coring does no structural harm. (Note: For pervious concrete, coring is not recommended because of damage from the coring process.)

If possible per the construction schedule, it is recommended to delay coring and allow the concrete to obtain additional strength. Coring no sooner than 28 days is recommended for a portland cement only mixture. If a portland-pozzolan cement, portland blast-furnace slag cement, or when fly ash or ground granulated blast-furnace slag is added to the concrete mixture, a waiting period for up to 56 days may be beneficial. During the waiting period, additional wet curing of the concrete will typically improve its strength.

When determining core locations, the use of a rebound hammer (also called a Schmidt Hammer or Swiss Hammer) according to ASTM C 805 "Rebound Number of Hardened Concrete" is useful for finding areas that have the potential for the least strength. (Refer to 9.8.2.3.3 "Other Tests" for additional information on the rebound hammer.) A cover meter (pachometer) is also useful in locating reinforcement to avoid coring through reinforcement. Unfortunately, coring through reinforcement may not always be avoided, and the Engineer of Record should be informed when this occurs because embedded reinforcement has a slight tendency to lower test results. As a final note, it is useful to get the unit weight of the core. A lower weight (mass) may indicate the core had a high water content (water has a much lower density than concrete). A lower weight (mass) may also indicate the core had high air content or the strength specimen was poorly consolidated. For more general information on coring, refer to ACI 214.4R "Guide for Obtaining Cores and Interpreting Compressive Strength Results".

The Contractor is normally responsible for obtaining the cores. The Engineer will supervise the coring and will take immediate possession of or otherwise secure the cores for transportation and testing. Either the Department or the Contractor will test the

cores. For Contractor testing, a Consultant that is acceptable to the Department is usually hired by the Contractor. The Engineer may witness the testing of the cores if it is not done by the Department. Core holes are normally repaired by the Contractor using a nonshrink grout from the Department's "Approved List of Nonshrink Grouts".

Per AASHTO T 24, cores should be tested at least five days after the wetting of the core. If quicker testing is required, it is recommended to wait at least two days after the last wetting of the core. The last wetting may occur after coring or after sawing the ends of the core (if applicable) in preparation for the test. If the core test results per AASHTO T 24 are 100.0 percent or more of the required strength, the concrete will be accepted for strength. This statement for concrete acceptance is based on the test result for each core, and not the average of two or more cores.

9.8.2.3.2 Load Test

In some cases coring is not possible or desirable and a load test is performed. A load test typically consists of placing a dead load on the structure or structural member and measuring the deflection and rebound after a period of time. The main goal of a load test is to prove structural adequacy with an adequate factor of safety against failure. Load tests are not able to determine concrete strength. A load test protocol is provided in ACI 318, and has been shown to produce acceptable results. However, there is much discussion on the acceptable criteria for a load test, and philosophical differences exist among engineers.

9.8.2.3.3 Other Tests

Two other methods for estimating in place concrete strength are ASTM C 803 "Penetration Resistance of Hardened Concrete" and ASTM C 805 "Rebound Number of Hardened Concrete". Unfortunately, these two test methods do not provide an accurate representation of in place concrete strength. <u>The ASTM C 803 and ASTM C 805 tests are not normally permitted by the Department to show the concrete may be accepted</u>. However, the test data may be used as supplemental information when evaluating questionable concrete. ASTM C 803 involves a steel probe or pin driven into the concrete using a driver unit. ASTM C 805 involves a spring-loaded steel hammer that is released and then strikes a plunger in contact with the concrete surface. The inaccuracies for these two tests are caused by the presence or absence of coarse aggregate beneath the point of contact. The tests may also be influenced by reinforcement bars with shallow concrete cover. In addition, ASTM C 805 is influenced by vertical versus horizontal testing, vertical distance from the bottom of concrete placement, depth of carbonation, concrete moisture, freezing temperatures, and concrete surface texture. The tests are better suited for evaluating the uniformity of the concrete at the surface, and to locate areas that have the potential for the least strength.

One other method for estimating in place concrete strength is ASTM C 597 “Pulse Velocity Through Concrete”. Unfortunately, this test method also does not provide an accurate representation of in place concrete strength. The ASTM C 597 test is not normally permitted by the Department to show the concrete may be accepted. However, the test data may be used as supplemental information when evaluating questionable concrete. ASTM C 597 involves a pulse generator, a pair of transducers for transmitting and receiving, an amplifier, and a time measuring circuit. The equipment measures the time for waves to move through concrete. The inaccuracy of the test is caused by the moisture, voids, and cracks in the concrete. The test is also influenced by the amount and type of aggregate, as well as the amount and orientation of reinforcement bars.

9.8.2.3.4 Strength Curve

When the test failure for low strength concrete is by a small amount, a strength curve may be considered. A strength curve is a plot of strength versus time. A strength curve requires a sufficient number of test results at different points in time to represent the concrete in question. A minimum of three well spaced test results is recommended, and the curve should not be drawn past 56 days to project strength. Any historical strength curve information should also be provided if available. The strength curve option causes much debate among engineers because the fitted curve could be manipulated to show passing results. Thus, the Engineer of Record may desire more proof. However, with the assistance of experienced personnel in the area of concrete, this option may be considered. As a guide to consider this option, failing test results should be within 3.0 percent of the required strength at 28 days or less.

9.9 COMPARING INDIVIDUAL CYLINDER TEST RESULTS

If the difference between two companion 6 x 12 in. (152 x 305 mm) cylinders from the same batch of concrete and tested at the same age exceeds 8 percent on a frequent basis, or 9.5 percent for three companion cylinders, this may be an indication to review the laboratory test procedures as well as the molding and curing of cylinders in the field. Refer to “Precision and Bias” in Illinois Modified AASHTO T 22 for more information.

10.0 CONCRETE TEMPERATURE

The concrete temperature shall not be less than 50 °F (10 °C) nor more than 90 °F (32 °C). However, a maximum concrete temperature shall not apply to Class PP Concrete. For insulated forms involving cold weather, the concrete temperature shall not exceed 80 °F (25 °C). (Note: Insulated forms are frequently used in mass concrete applications, but the 80 °F (25 °C) maximum temperature does not apply. This is because the Contractor is required to submit a thermal control plan.) Concrete temperature is normally checked "immediately before placement". However, when concrete is pumped, the concrete temperature is checked "at point of placement" because of the friction in the pipeline which causes additional heat gain in the concrete. Refer to Article 1020.14 for additional information regarding concrete temperature.

A batch of concrete not within the temperature specification limits shall be rejected by the Level I PCC Technician.

10.1 HIGH TEMPERATURE

As the concrete temperature increases, the following will occur:

- Increased slump loss, which will make concrete more difficult to place.
- Increased water demand, as a result of moisture loss through evaporation.
- Decreased air content, unless the air-entraining admixture dosage is increased.
- Acceleration of the initial set time. The time to set will decrease approximately one third for every 10 °F (5.5 °C) increase in temperature. Thus, the potential for a cold joint is greater. Refer to 15.3.1 "Cold Joint" for additional information.
- Increased potential for plastic shrinkage cracking. Plastic shrinkage cracking is the result of rapid evaporation of moisture from the concrete surface. The cracks occur when water evaporates from the surface faster than bleed water can appear at the surface. The cracks can occur soon after freshly mixed concrete has been placed, and while it is being finished.

  If hot weather occurs when there is low humidity and high winds, the possibility of plastic shrinkage cracking is significantly increased. **In the Portland Cement Association's publication entitled "Design and Control of Concrete Mixtures," there is a very helpful evaporation rate figure. Refer to the Section on "Plastic Shrinkage Cracking." It is very important to know when the evaporation rate is dangerously high. In addition, the Contractor is responsible for providing temperature, relative humidity, and wind speed measuring equipment to determine the evaporation rate for bridge deck and bridge deck overlay pours.**

  The use of fine cement, fly ash, microsilica, high-reactivity metakaolin, synthetic fibers, and some admixtures (Refer to 11.0 "Admixtures") will result in less bleed water. Also, a low water content mixture or high entrained air mixture will have less bleed water. A concrete mixture which lacks bleed water will be more susceptible to plastic shrinkage cracking.

  The bridge deck microsilica or high-reactivity metakaolin overlay mixture is especially susceptible to plastic shrinkage cracking, because of little bleed water.

The lack of bleed water is due to the ultra-fineness of the microsilica or high-reactivity metakaolin and the thinness of the overlay. Therefore, take precautions with either mixture.

- The possibility for thermal cracking. Thermal cracking occurs when there is a significant drop in concrete temperature. As an example, the cracking can occur when a hot day is followed by a cool night.

- Higher early strengths but lower long term strengths.

If water is added to compensate for slump loss, or to compensate for increased water demand, early and long term strength will be reduced.

10.2 TAKING PRECAUTIONS IN THE FIELD DURING HOT WEATHER

The following methods can be used to reduce concrete temperature gain during hot weather conditions.

- Provide adequate labor to quickly place, consolidate, finish, and cure the concrete. **The sooner curing is started, the better! If finishing is delayed, then cover the concrete with wet burlap or cotton mats until finishing can be completed.**

- Pour during the cool part of the day or at night.

- Spray the subgrade, forms, and reinforcement with water, to take advantage of evaporative cooling.

- Erect sunscreens to reduce the concrete surface temperature.

For other precautions, consider the following:

- Reschedule the pour.

- Consider the use of windbreaks to reduce wind. This will decrease moisture loss from the concrete surface, which can prevent plastic shrinkage cracking. Refer to 10.1 “High Temperature” for additional information regarding plastic shrinkage cracking.

- Consider the use of fog spraying equipment. For bridge deck and bridge deck overlays, fog spraying with a triple head nozzle or an equivalent nozzle is required. Fog spraying increases the relative humidity above the concrete, which decreases moisture loss from the concrete surface. This will help prevent plastic shrinkage cracking. Refer to 10.1 “High Temperature” for additional information regarding plastic shrinkage cracking.

- For fog spraying, do not use garden-type spray nozzles because they are not effective. Fog spray nozzles can be purchased from finish-tool suppliers. Pressure washers can be used for fog spraying, if they provide 2 to 3 gallons (8 to 11 liters) per minute at 2,000 to 2,500 psi (14,000 to 17,000 kPa). A 40 to 50 degree wide angle is used for calm days. On a windy day, use a 10 to 15 degree wide angle. The information concerning pressure washers was obtained from Concrete Construction (June 1997). The article was called “Curing During the Pour.”

- Do not apply an evaporation retardant to the concrete. Testing by the Department has not shown any conclusive data, that the products will reduce the evaporation of moisture. There is also concern for scaling (i.e., deterioration of the upper concrete slab surface), if the evaporation retardant is finished into the concrete surface.

10.3 LOW TEMPERATURE

As the concrete temperature decreases, the following will occur:

- The initial set time will be delayed.
- The bleed water will decrease.
- The strength gain will slow down.

If the mix water for concrete freezes, a 30 to 50 percent reduction in concrete strength can occur. The danger from freezing is eliminated when the hydration process has consumed sufficient mix water. This occurs when the concrete compressive strength reaches 500 psi (3,450 kPa); provided no water is available from outside the concrete, such as curing water. Refer to 15.5 “Frozen Concrete” for additional information.

10.4 TAKING PRECAUTIONS IN THE FIELD DURING COLD WEATHER

The following methods can be used to reduce concrete temperature loss, during cold weather conditions.

- Provide adequate labor to quickly place, consolidate, finish, and cure the concrete; and to begin cold weather protection.
- Provide a heated enclosure.
- Preheat the subgrade, forms, and reinforcement.

10.5 QUALITY CONTROL

The Level I PCC Technician shall check the thermometers for calibration. In addition to the requirements of 2.4 “Frequency of Sampling and Testing”, concrete temperature should be determined whenever tests are performed at the plant or jobsite.

The Level I PCC Technician shall discuss the plant operations and admixtures being used, during hot and cold weather conditions, with the Level II PCC Technician.

10.6 GENERAL

If the temperature of concrete increases 10 °F (6 °C), then the following will occur:

- Approximately 1 gallon per cubic yard (5 liters per cubic meter) of additional water will be required to maintain slump, unless a water-reducing admixture is used.
- Air content will decrease approximately 1 percent.
- Long term compressive strength will decrease approximately 150 to 200 psi (1,035 to 1,380 kPa).

11.0 ADMIXTURES

According to Article 1020.05(b), the Contractor shall be responsible for using admixtures and determining dosages for all classes of concrete, cement aggregate mixture II, and controlled low-strength material that will produce a mixture with suitable workability, consistency, and plasticity. The Contractor shall obtain approval from the Engineer to use an accelerator when the concrete temperature is greater than 60 °F (16 °C). However, this accelerator approval will not be required for Class PP, RR, PC, and PS concrete. Information on the use of admixtures is provided in Article 1020.05(b). Admixtures are used to modify the properties of a concrete mixture, and are added as a water based solution. Solids, except for controlled low-strength material, are not permitted because they provide less uniformity in a mixture.

Admixtures approved by the Department are listed on the Approved List of Air-Entraining Admixtures for Controlled Low-Strength Material (CLSM), Approved List of Concrete Admixtures and Approved List of Corrosion Inhibitors. To view or download these lists on the Internet, go to http://www.dot.state.il.us. The lists are found under Doing Business; Materials; Approved Lists for Materials. There is also an Index which includes the contact person for questions about each list. For your convenience, a link has also been provided on the web page for an e-mail subscription to receive notice of changes to any list.

11.1 ADMIXTURES AND THEIR DESIGNATIONS

In addition to an air-entraining admixture or corrosion inhibitor, other chemical admixtures are typed according to AASHTO M 194 as follows:

- Type A — Water-reducing admixture.
- Type B — Retarding admixture.
- Type C — Accelerating admixture.
- Type D — Water-reducing and retarding admixture.
- Type E — Water-reducing and accelerating admixture.
- Type F — Water-reducing, high range admixture.
- Type G — Water-reducing, high range, and retarding admixture.
- Type S — Specific performance admixtures.

11.2 RETARDING ADMIXTURE

When the atmospheric or concrete temperature is 65 °F (18 °C) or higher, a retarding admixture shall be used for Class BS concrete and concrete bridge deck overlays. The retarding admixture is required at such a low temperature to allow ample time to add the required superplasticizer at the jobsite, and to consider the deflections that occur during the bridge deck pour. Deflections may cause cracking if the concrete becomes stiff as a result of the hydration process. Refer to 11.5 “High-Range Water-Reducing Admixture” for additional information. For Class PP-4 concrete, a retarding admixture shall be used to allow for haul time. For Class DS concrete, a retarding admixture shall be used. In addition for Class DS concrete, the concrete mixture shall be designed to remain fluid throughout the anticipated duration of the pour plus one hour.

The main reason the Department requires the use of a retarder is to counter the rapid setting caused by high temperatures. If the correct dosage is used, the initial set of concrete is not affected by the high temperatures. In other words, the time period for workability remains unchanged.

Another reason to use a retarder is to extend the haul time allowed; or extend the time to place, consolidate, and finish the mixture, if the haul distance is short. In other words, the retarder is used to extend the time period for mixture workability.

A retarding admixture is added at the plant.

11.3 WATER-REDUCING ADMIXTURE

A water-reducing admixture may be used to increase slump, while maintaining the same water/cement ratio; or to maintain the same slump, while decreasing the water/cement ratio; or to maintain the same slump and water/cement ratio, while decreasing the cement factor. The third use is permitted according to Article 1020.05(b)(8), and is primarily used for reducing heat generated by hydration, and for reducing material costs. A water-reducing admixture shall be used for cement aggregate mixture II according to Article 312.26. If Class C fly ash or ground granulated blast-furnace slag is used in Class PP-1 or RR concrete, a water-reducing or high range water-reducing admixture shall be used according to Article 1020.05(b)(3). For Class DS concrete involving dry excavations 10 ft (3 m) or less, a high range water-reducing admixture may be replaced with a water-reducing admixture if the concrete is vibrated. This is according to Article 1020.05(b)(7). During hot weather, concrete will require more water to maintain slump. Instead of adding water, which will increase the concrete's drying shrinkage and lower its strength, a water-reducing admixture is normally used.

A water-reducing admixture reduces the amount of water needed for a workable mixture. The typical water content reduction is between 5 and 10 percent.

A water-reducing admixture functions by dispersing cement, allowing water trapped within the cement grain clusters to become free. In addition, by dispersing the cement, more cement surface area is exposed to mix water. This allows more complete hydration of the individual cement grains, resulting in higher strength.

A water-reducing admixture is added at the plant.

11.4 MID-RANGE WATER-REDUCING ADMIXTURE

Mid-range water-reducing admixtures do not have their own type designation per Section 11.1 "Admixtures and Their Designations", but the term used is more descriptive of what the admixture can do. However, the Approved List of Concrete Admixtures does provide a list of admixtures that are capable of functioning as a mid-range water reducing admixture.

A mid-range water-reducing admixture may be used to increase slump, while maintaining the same water/cement ratio; or to maintain the same slump, while decreasing the water/cement ratio.

A mid-range water-reducing admixture will typically reduce the water content between 8 and 15 percent. A mid-range water-reducing admixture functions the same way as a water-reducing admixture, by dispersing cement.

A mid-range water-reducing admixture is added at the plant.

11.5 HIGH-RANGE WATER-REDUCING ADMIXTURE (Superplasticizer)

A superplasticizer may be used to produce a very high slump or slump flow for self-consolidating concrete (refer to Appendix H for more information), while maintaining the same water/cement ratio. The highly fluid and workable concrete will not bleed water excessively; and will not segregate readily, if handled and consolidated properly. Superplasticizers are ideal for pumping concrete, since the superplasticizer will reduce pump pressure, and thus, increase the lift and distance capacity. A superplasticizer may also be used to maintain the same slump, while decreasing the water/cement ratio significantly.

A superplasticizer shall be used for Class PP-2, PP-3, PP-4, PP-5 concrete, Class DS concrete, formed concrete repair, a bridge deck, a bridge deck fly ash or ground granulated blast-furnace slag overlay, a bridge deck microsilica overlay, or a bridge deck high-reactivity metakaolin overlay. If Class C fly ash or ground granulated blast-furnace slag is used in Class PP-1 or RR concrete, a water-reducing or superplasticizer admixture shall be used.

For a superplasticizer, the maximum slump according to Article 1020.04 is 7 in. (175 mm), except for Class PV, SC, and PP concrete. For Class SC, the maximum slump may be increased to 8 in. (200 mm). For Class PP-1, the maximum slump may be increased to 6 in. (150 mm). For Class PS, the 7 in. (175 mm) slump may be increased to 8 1/2 in. (215 mm) if the high range water-reducing admixture is the polycarboxylate type. For Class DS concrete that is placed to displace drilling fluid, or against temporary casing, the slump shall be 8 – 10 in. (200 – 250 mm) at the point of placement. A superplasticizer will typically reduce the water content between 12 and 30 percent. A polycarboxylate superplasticizer may reduce the water content up to 40 percent. A superplasticizer functions the same way as a water-reducing admixture, by dispersing cement.

Type F superplasticizers are frequently added at the jobsite, because of their 30 to 60 minute life, which is followed by a rapid slump loss. The polycarboxylate superplasticizer is known for its longer slump life, provided the mixture is agitated until discharge. Extended life superplasticizers are available for addition at the concrete plant, and a Type G superplasticizer will typically fall in this category. If a superplasticizer will be added at the plant, the admixture technical representative should be consulted.

11.5.1 Adding A Superplasticizer At The Jobsite

The procedure for adding a superplasticizer at the jobsite is as follows:

- Verify the Level II PCC Technician has reduced the total mix water by the amount contained in the superplasticizer. Ask the Level II PCC Technician what is the allowable quantity of water which can be added at the jobsite.

- Admixtures compatible with the superplasticizer may be used concurrently to facilitate placement, for strength gain, and to control set times. These admixtures should be added just after the air entraining agent, but before the addition of the superplasticizer. This includes an accelerating admixture which is always added before the superplasticizer.

- An initial minimum slump of 1 1/2 in. (40 mm) is required prior to the addition of the superplasticizer, except as approved by the Engineer. After the addition of the superplasticizer, final slump shall be no greater than is necessary for proper placement and compaction. In no case shall the slump exceed the maximum value allowed per Article 1020.04.

- The dosage rate shall be in accordance with the Department's Approved List of Concrete Admixtures.

- The concrete in the truck mixer shall be moved to the rear of the drum with discharge imminent.

- The superplasticizer shall be added by dispensing directly onto the concrete.

- The Level I PCC Technician should consult the manufacturer's recommendations for the minimum number of mixing revolutions. Do not mix the concrete less than 40 revolutions. For a bridge deck microsilica or high-reactivity metakaolin concrete overlay, refer to the specifications. The mixing speed for the truck mixer shall be per the manufacturer's rating plate.

- Perform a slump test to verify compliance with specifications.

- Perform an air content test to verify compliance with specifications. Sulfonated melamine formaldehyde condensate (melamine-based) superplasticizers may decrease air content or have little effect. Sulfonated napthalene formaldehyde condensates (napthalene-based) superplasticizers will decrease air content. Lignosulfate superplasticizers and polycarboxylate superplasticizers will increase air content. A polycarboxylate superplasticizer is especially prone to increasing air content when the drum mixing speed is too fast.

- If slump loss occurs after a period of time, retempering the concrete shall be per the manufacturer's recommendations. Remember that retempering may unduly affect set time, especially a Type G.

11.6 VISCOSITY MODIFYING ADMIXTURE

A viscosity modifying admixture is used to increase the cohesiveness of a concrete mixture and reduce or eliminate bleed water. The two applications for a viscosity modifying admixture are as follows:

- To provide resistance to washout of cement, finely divided minerals, and aggregate fines when placing concrete underwater. The term anti-washout admixture is more commonly used for this application.

- To supplement the resistance to segregation in self-consolidating concrete mixtures. Normally, the superplasticizer will be sufficient to prevent segregation. However, a mixture with a little too much water can be corrected by adding a viscosity modifying admixture to the concrete mixture. Some types of superplasticizers used to make self-consolidating concrete require a separate viscosity modifying admixture to be added to the concrete mixture.

11.7 ACCELERATING ADMIXTURE

An accelerating admixture is used to accelerate strength development at an early age, by reducing the initial set time of concrete. Accelerators are recommended in cold weather to help concrete gain high early strength. An accelerator will make the concrete resistant to damage from freezing, and reduces the time period for cold weather protection measures. However, accelerators shall not be used to replace proper curing and cold weather protection. Accelerators are sometimes used to begin finishing operations earlier. An accelerator is frequently used for patching mixtures, and is required for Class PP-2, PP-3, and PP-5 concrete. For Class PP-3 concrete, the accelerator is required to be calcium nitrite.

Accelerators should not be used for mass concrete pours, because the heat from hydration may increase the possibility for thermal cracking. Thermal cracking occurs when there is a significant drop in concrete temperature. A cool night can cause this significant drop in temperature.

Accelerating admixtures approved by the Department are calcium chloride and those listed on the Department's Approved List of Concrete Admixtures.

Accelerators are frequently added at the jobsite because the concrete mixture will stiffen rapidly.

11.7.1 Calcium Chloride

To assure the calcium chloride admixture will be evenly distributed throughout the concrete and will give predictable results, a standard solution of calcium chloride and water shall be used. Dry pellets or flakes shall not be used. The standard solution shall contain a minimum of 32.0 percent by weight (mass) of calcium chloride.

If a prepared calcium chloride solution is not available, the following method is recommended for preparing the solution at the jobsite:

- Fill a 55 gallon (208 liter) drum with sufficient water to create a minimum 32.0 percent by weight (mass) of calcium chloride. The drum should be approximately 2/3 full of water.

- Slowly add 2 bags of calcium chloride while stirring. Use two 100 lb (45 kg) bags of regular calcium chloride, 77 percent minimum or two 80 lb (36 kg) bags of concentrated calcium chloride, 94 percent minimum. Always add calcium chloride to water because if water is poured on calcium chloride, a hard coating will form which will be difficult to dissolve. The calcium chloride will dissolve easily in hot or cold water. Do not add more calcium chloride than recommended because unnecessary calcium chloride will be added to the batch of concrete, or the solution may solidify at higher temperatures.

- Stir until the calcium chloride is dissolved. A mechanical mixer is recommended to stir the solution.

- Fill with water to the 50 gallon (189 liter) level and stir again. The addition of calcium chloride develops heat. Therefore, allow the solution to cool after stirring is completed.

- If the solution is prepared in drums, keep a clean empty drum nearby to eliminate the calculation of partial quantities. Before more solution is needed, fill this drum using the method previously discussed.

11.7.2 Adding An Accelerating Admixture At The Jobsite

The procedure for adding an accelerating admixture at the jobsite is as follows:

- Verify the Level II PCC Technician has reduced the total mix water by the amount contained in the accelerator.

- Add approximately 1 to 2 percent of calcium chloride by weight (mass) of the portland cement. This corresponds to a dosage rate of 1 to 2 quarts (1 to 2 liters) of standard solution per 100 lb (45 kg) of cement. Refer to Article 1020.05(b)(6) for additional information. For other accelerating admixtures, the Department's Approved List of Concrete Admixtures provides a dosage rate.

- The concrete in the truck mixer shall be moved to the rear of the drum with discharge imminent.

- The accelerator shall be added by dispensing directly onto the concrete.

- Mix the concrete a minimum of 40 revolutions at mixing speed. The mixing speed for the truck mixer shall be per the manufacturer's rating plate.

- Perform a slump test to verify compliance with specifications.

- Perform an air content test to verify compliance with specifications. Calcium chloride accelerators increase air content. The other types of accelerators have little effect.

11.8 RHEOLOGY-CONTROLLING ADMIXTURE

A rheology-controlling admixture is a specialty admixture available for use. A rheology-controlling admixture lowers the yield stress, or force required to initiate flow, of the bulk concrete mixture without necessarily changing its viscosity. A rheology-controlling admixture is ideal for slipform applications. The admixture increases extrusion rate/productivity, improves surface appearance/minimizes bugholes, and reduces vibration intensity for consolidation.

11.9 CORROSION INHIBITOR

A corrosion inhibitor is used in concrete to inhibit the corrosion of steel reinforcement that is exposed to high concentrations of chlorides from deicing agents. Corrosion inhibitors are normally used in precast prestressed concrete members, but may be used in other applications. Corrosion inhibitors approved by the Department are calcium nitrite and those listed on the Department's Approved List of Corrosion Inhibitors.

12.0 CEMENT AND FINELY DIVIDED MINERALS

12.1 CEMENT

There are eight types of portland cement allowed by the Department according to AASHTO M 85 (ASTM C 150). They are as follows:

- Type I * - General purpose.
- Type IA - General purpose and air-entraining.
- Type II * - Moderate sulfate resistance.
- Type IIA - Moderate sulfate resistance and air-entraining.
- Type II(MH) - Moderate heat of hydration and moderate sulfate resistance.
- Type II(MH)A - Moderate heat of hydration, moderate sulfate resistance, and air-entraining.
- Type III * - High early strength. **
- Type IIIA - High early strength ** and air-entraining.
- Type IV - Low heat of hydration.
- Type V - High sulfate resistance.

* The cement is commonly used in Illinois.

** The cement is finely ground.

There are two types of blended cement allowed by the Department according to AASHTO M 240 (ASTM C 595). They are as follows:

- Type IP - Portland-pozzolan cement for general use.
- Type IS * - Portland blast-furnace slag cement for general use.

* The cement is commonly used in Illinois.

Two common problems associated with cement are flash set and false set. Flash set is the early stiffness of the concrete, usually with much heat. The stiffness cannot be dispelled by further mixing with no additional water. The frequent cause for flash set is insufficient gypsum to control the tricalcium aluminate (C_3A) reaction. False set is the early stiffness of the concrete without much heat. The stiffness can be dispelled by further mixing with no additional water. False set may occur when concrete is mixed in a stationary mixer for a short period of time, and subsequently transported in nonagitating trucks. Paving jobs are an example. False set may also occur when there is an incompatibility between a cement and an admixture.

Two other terms to know are initial and final set of concrete, which is influenced by the cement, finely divided minerals, admixtures, and concrete temperature. Initial set is the point of time where the concrete begins to become firm. This will typically occur 2 to 4 hours after batching the concrete. Final set is the point of time where the concrete is no longer plastic and finishing no longer can take place. This will typically occur 5 to 8 hours after batching the concrete.

12.2 FLY ASH

Fly ash is the finely divided residue that results from the combustion of ground or powdered coal. Fly ash may partially replace portland cement in concrete mixtures, and will have the following effects on the freshly mixed concrete:

- Air content will require a higher dosage of air-entraining admixture.
- Workability will improve (i.e., pumping and finishing).
- Segregation will be reduced.
- Bleed water will be reduced.
- Heat of hydration will be reduced.
- Set time will be delayed. However, a fly ash with high tricalcium aluminate (C_3A) or calcium oxide (CaO) may cause a faster set time.

Hardened concrete containing fly ash will normally have lower early strengths and higher long term strengths, than comparable “cement only” concrete mixtures.

12.3 GROUND GRANULATED BLAST-FURNACE SLAG (GGBF SLAG)

GGBF Slag is the glassy granular material formed when molten blast-furnace slag is rapidly chilled, and then finely ground. GGBF Slag may partially replace portland cement in concrete mixtures, and will have the following effects on freshly mixed concrete:

- Air content may require either an increase or decrease in the dosage of the air-entraining admixture.
- Workability will improve (i.e., pumping and finishing).
- Segregation is not adversely affected.
- Bleed water may increase or decrease slightly.
- Heat of hydration will be reduced.
- Set time will be delayed.

Hardened concrete containing GGBF Slag will normally have lower early strengths and higher long term strengths, than comparable “cement only” concrete mixtures.

12.4 MICROSILICA

Microsilica is the extremely fine by-product that results from the manufacture of silicon or silicon alloys. The use of microsilica will have the following effects on freshly mixed concrete:

- Air content will require a higher dosage of air-entraining admixture.
- Workability will be reduced. Thus, high range water-reducing admixtures (superplasticizers) are used.
- Segregation will be reduced.
- Bleed water will be reduced.
- Heat of hydration is not affected. (Note: A superplasticizer allows more complete hydration of the individual cement grains. Thus, more heat will be released.)
- Set time is not affected.

Hardened concrete containing microsilica will have higher early and long term strengths, than comparable “cement only” concrete mixtures.

12.5 HIGH-REACTIVITY METAKAOLIN (HRM)

HRM is the manufactured product formed by calcining purified kaolinite at a specific temperature range. The use of HRM will have the following effects on freshly mixed concrete.

- Air content will require a higher dosage of air-entraining admixture.
- Workability will be reduced. Thus, high range water-reducing admixtures (superplasticizers) are used. When compared to microsilica, HRM will require slightly less superplasticizer.
- Segregation will be reduced.
- Bleed water will be reduced.
- Heat of hydration is reduced.
- Set time is not affected.

Hardened concrete containing HRM will have higher early and long term strengths, than comparable “cement only” concrete mixtures.

13.0 WATER-CEMENT CONTROL

The water/cement ratio is defined as the weight (mass) of water, divided by the weight (mass) of cement. The water shall include mixing water, water in admixtures, free moisture on the aggregates (i.e., water on the surface of the individual aggregate particles), and water added at the jobsite.

When fly ash, ground granulated blast-furnace slag, microsilica, or high-reactivity metakaolin are used in a concrete mix, the water/cement ratio will be based on the total cement and finely divided minerals contained in the mixture.

A maximum water/cement ratio will limit the quantity of water which can be added at the jobsite. A water/cement ratio range is specified for the following:

- The minimum water/cement ratio for all classes of concrete is 0.32, except Class PC (dry cast) which may be 0.25. The water/cement ratio should never be below 0.32 because cement hydration could be restricted.

- To ensure durability of concrete, the maximum water/cement ratio should never exceed 0.45 for a concrete mixture except as allowed for Class PP-4 concrete.

- The maximum water/cement ratio for Class PV concrete is 0.42. The maximum water/cement ratio for Class RR, BS, PC (wet cast), PS, DS, SC and SI concrete is 0.44. The maximum water/cement ratio for Class PC (dry cast) concrete is 0.40. The maximum water/cement ratio for Class PP-1 concrete is 0.44, for Class PP-2 concrete it is 0.38, for Class PP-3 concrete it is 0.35, for Class PP-4 concrete it is 0.50, and for Class PP-5 concrete it is 0.40.

- The water/cement ratio for a bridge deck overlay varies with the type of overlay. For a bridge deck fly ash or ground granulated blast-furnace slag overlay, the water/cement ratio range is 0.32 – 0.44. For bridge deck microsilica and high-reactivity metakaolin overlays, the water/cement ratio range is 0.37 to 0.41. For latex concrete bridge deck overlays, the range is 0.30 to 0.40. For a concrete wearing surface, the range is 0.32 to 0.44.

The Level II PCC Technician is responsible for determining the allowable quantity of water which can be added at the jobsite, and communicating this information to the Level I PCC Technician on-site. The Level I PCC Technician is responsible for notifying the Level II PCC Technician the quantity of water added at the jobsite.

14.0 CURING

One of the most important aspects of concrete construction is curing. **The need for proper curing cannot be overemphasized.** The most frequent problem that occurs in the field is not curing soon enough. Curing should begin as soon as possible after the concrete surface is finished. By doing this, a durable concrete with the required strength can be achieved. In addition, timely curing can prevent the occurrence of cracks in the concrete. This is especially important for bridge decks which are subjected to deicing chemicals. For more information on curing requirements, refer to Articles 602.11(c) and 1020.13.

15.0 PROBLEMS IN THE FIELD

15.1 IDENTIFYING PROBLEMS WITH A CONCRETE MIXTURE

Careful observation by the Level I PCC Technician can detect many problems which can occur with a concrete mixture.

The following situations require notification to the Level II PCC Technician at the plant, and action at the jobsite:

- Uncoated Aggregates - Concrete containing uncoated aggregates is to be discarded by the Contractor.

- Segregation - Segregation occurs when the coarse aggregate separates from the mortar. Mortar consists of fine aggregate, cement, finely divided minerals, water, and air.

  If segregation occurs, check for lower air content and the transport/handling method used.

- Microball - A microball is a clump of material containing cement on the outside and microsilica on the inside. A microball is normally 2 in. (50 mm) in diameter, and very hard to detect in a batch of concrete. The Level I PCC Technician shall reject the entire batch of concrete if a microball is observed.

  The Department has experienced numerous popouts on microsilica bridge deck overlays, because of microballs. These popouts will appear after the overlay experiences one or more freeze/thaw cycles.

- Cement Ball - A cement ball is a clump of material containing cement, fine aggregate, and coarse aggregate. The dry materials may pack into the truck mixer and are not mixed. During discharge, the lumps will break loose. Occasional cement balls can be removed by the Contractor during placement.

- Sand Streaks - Sand streaks consist of fine aggregate, or fine aggregate and cement which have become packed in the head of the truck mixer, and are not mixed. Occasionally, dry fine aggregate material will also pack around or behind the blades, in the discharge end of the drum. Concrete containing sandy material is to be discarded by the Contractor.

- Change In Color - A change in concrete color may be an indication of a change in materials, incomplete mixing, or too little cement.

- Change In Appearance - A change in appearance, such as a sticky mixture, may indicate too many fine materials. These fine materials may be cement or finely divided minerals. A sticky mixture may also indicate high air content.

- Mudballs - Mudballs can be introduced into concrete as a result of contaminated aggregate stockpiles. Aggregate stockpiles can be contaminated by mud which drops from hauling and loading equipment. Occasional mudballs can be removed by the Contractor during placement.

- Mix Foaming – Mix foaming or other detrimental material may be observed during placement or at the completion of a self-consolidating concrete pour. In this case, the material may be removed by the Contractor while the concrete is still plastic.

  Mix foaming is an indication that the self-consolidating concrete is not cohesive (or stable) and may have excess water.

Many of the previous examples indicate incomplete mixing of the concrete. This may be the result of the method used to "charge" or load materials in a truck mixer. Incomplete mixing may also be the result of concrete build-up within the mixer, mixer blade wear, mixing speed, and mixing time or revolutions. Therefore, some of these problems can only be resolved by the Level II PCC Technician.

15.2 BUGHOLES IN HARDENED CONCRETE

Bugholes are voids in hardened concrete that result from entrapped air bubbles migrating to where the concrete meets the form's interior surface. An excessive number of bugholes will cause an aesthetic problem, and will require more work to correct the surface's appearance.

Improper consolidation is the most frequent cause of bugholes. Therefore, it is very important to vibrate between lifts and work entrapped air bubbles up the form sides. In addition, the type of form material and form release agent will influence bugholes, possibly requiring extra vibration effort to move the air bubbles up the form sides. Mixes with a high sand (except for self-consolidating concrete) and air content will also make it more difficult to move the air bubbles up the form sides.

A mix design which contributes to the ease of consolidating the concrete is beneficial. Self-consolidating concrete (SCC) is increasingly being used to obtain a high quality surface finish with few bugholes.

15.3 COLD JOINT OR FOLD IN HARDENED CONCRETE

15.3.1 Cold Joint

A cold joint is visible as a distinct and separate layer in hardened concrete. It occurs when there has been a delay in placing a subsequent lift of concrete. The lift may have been vibrated, but not sufficiently to combine it with the previous lift. Good concrete delivery and consolidation practices will prevent this problem.

In the case of equipment breakdown and a long delay before operations are resumed, it may be possible to prevent a cold joint by periodically vibrating the concrete. The time interval for vibrating the concrete should be 15 minutes or less, depending on field conditions. If possible, cover the concrete with wet burlap or cotton mats between intervals. Be careful to not vibrate so much that the concrete segregates. Vibration shall stop if there is any indication the concrete is beginning to get firm. If this occurs, it is probably too late to prevent the cold joint.

The PCC Level I Technician is advised that discoloration between lifts of concrete is not always an indication of a cold joint. For example, a discoloration may occur due to a different water/cement ratio. A mix with a relatively higher water/cement ratio will typically be lighter in color. A discoloration may also be caused by the condition of the forms or amount of form release applied to the forms.

15.3.2 Fold from Self-Consolidating Concrete (SCC)

A fold resulting from self-consolidating concrete is identified by the visible line between concrete lifts, and is very similar to a cold joint. A fold is the result of the thixotropic nature of SCC. Thixotropy is a liquid state when stirred or shaken that returns to a hardened state when left standing. In the case of SCC, the concrete starts out very fluid and will subsequently "stiffen" very soon after placement. Excessive time between concrete lifts will produce a poor bond between each layer of placed concrete. Therefore, it is very important to rod the SCC with a piece of lumber or conduit when the concrete has lost its fluidity. A vibrator used in a manner that does not cause the coarse aggregate to separate from the mortar may also be used to restore fluidity.

15.3.3 Laminations

Whenever there is a reason to suspect a cold joint or fold, the following initial visual inspection in conjunction with examining exploratory cores may be used to determine if a lamination actually exists. A lamination will permit water access and reduce the life expectancy and durability of the construction item.

In the case of the initial visual inspection, if water weeps from the cold joint or fold immediately after form removal, this indicates a lamination exists. However, if no water is observed, this does not assure a cold joint or fold does not exist. The visible line may be at the form surface only, or an actual lamination may extend into the construction item. Therefore, coring will need to be performed.

Exploratory core samples shall be taken by the Contractor. The locations should focus on those areas with the highest concern, and consideration should be given to spacing the cores every 10 to 15 ft. (3 to 4.5 m) if the cold joint or fold is extensive in length. The Engineer will make the final determination on the appropriate number of cores and their locations, but may consult with the Bureau of Bridges and Structures. The cores should be approximately 1 in. (25 mm) in diameter, centered over the visible line, and extend approximately 2 in. (50 mm) into the construction item. Care shall be taken to ensure that no reinforcing steel or prestressing strand is damaged by the core sampling operation. Once the exploratory core sample is obtained, use the following three steps to examine the core and determine if a lamination exists.

1. The first step is to firmly tap the core on a hard and flat surface. If the core separates into two halves along the visible line, this is confirmation a lamination exists.

2. If the core doesn't break, the second step is to allow the core to dry, since it will be wet from the coring operation. As the core dries, observe if the visible line remains wet after the surface of the core dries. Preference should be given to the inner portion of the core sample, since the formed face may have honeycomb or other issues that are not related to the suspected cold joint or fold. If it remains wet, this is confirmation a lamination exists.

3. If the visible line does not remain wet, the third step is to examine the core and core hole for consolidation. If visual inspection shows coarse aggregate crossing what is suspected to be the lamination, this is an indication that the concrete was adequately consolidated and no cold joint or fold exists. However, if the inspection still shows a distinct layer in the core or core hole, this is confirmation that a lamination exists.

The Engineer will make the final determination if there is a cold joint or fold, and will indicate the repair material to be used for the core holes.

15.4 RAIN DAMAGED CONCRETE

Weather is unpredictable and rain can occur without notice. When rain occurs during placement of concrete, the best thing to do is cover the concrete with plastic sheeting. However, even this can be a challenge. For example, when pouring curb and gutter next to an existing pavement, the pavement's slope may make it impossible to keep water out. For slipform concrete, such as paving operations, it is recommended to install side forms to prevent erosion of the concrete edge.

When plastic sheeting is used, a good rule of thumb is to cover all concrete that shows indentation from the impact of raindrops. Some marring of the concrete surface may occur from the plastic sheeting, but it is usually minor. Areas where the rain does not indent the surface and is simply washing the curing compound away do not need to be covered.

When plastic sheeting is not available or water infiltrates the plastic and wets the concrete surface, the worst thing that can be done is to finish the rainwater into the surface. Finishing significant amounts of rainwater into the concrete surface will increase the surface's water/cement ratio and decrease its air entrainment. The net result is a weak surface with poor freeze/thaw durability. The surface will scale and deicing salt will accelerate the process.

When the rain does not indent the concrete surface and simply washes the curing compound away, satisfactory performance is possible. The main task of the Contractor is to reapply the curing compound after the rain has stopped. Experience has shown the concrete should not be greatly affected. If the concrete surface is gritty, this is not a problem if it is minor. The Department has evaluated a pavement that was rained on in this manner. The performance of the pavement was good, and skid testing showed only a minor affect.

When placing pavement, refer to Article 420.07 for specification requirements when rain is imminent. If grinding is allowed to repair the pavement, consideration must be given to the affect on slab thickness. In addition, for continuous reinforced pavement, consideration must also be given to the location of the reinforcement in the slab and to the resulting concrete cover over the reinforcement. For jointed concrete pavement, the location of the dowel bar may be affected.

In those situations where it may be needed to determine the depth of concrete damage, a core can be taken to a petrographer. Even though the petrographer can estimate the depth of damage, there is still the risk that some locations may have deeper damage where weak mortar may have filled in a depression.

In some instances rain can cause uncontrolled cracking in concrete pavements. This may occur after final set of the concrete. The rain may induce rapid cooling of the concrete surface, which produces cracks from thermal restraint stresses. The use of two layers of polyethylene sheeting, or one layer of polyethylene sheeting and one layer of burlap will help prevent this type of cracking.

15.5 FROZEN CONCRETE

Frozen concrete is a rare occurrence for field construction because of the minimum 50 ºF (10 ºC) concrete temperature specification requirement, and cold weather protective measures during the cure period. However, ice crystal imprints in the concrete are a sign that the concrete was frozen. A 2-power hand held lens may be needed to see the imprints. Even if the imprints are observed in strength specimens, this does not mean that the concrete placed in the field was damaged. This is due to heat of hydration generated by the larger mass of concrete. However, the field concrete still needs to be examined with particular attention given to edges and corners.

If ice crystal imprints are observed, this is a good indication the concrete froze before attaining a compressive strength of 500 psi (3450 kPa). If this occurred, the potential strength loss is 30 to 50 percent. Normally, when concrete obtains a compressive strength of 500 psi (3450 kPa) or more, it can withstand one freeze/thaw cycle. If the concrete is subjected to more than one freeze/thaw cycle before it has attained a compressive strength of 3500 psi (24130 kPa), there is also the risk for strength loss.

When frozen concrete is suspected, an investigation is warranted. Refer to 9.8.2.2 “Consultation with Engineer of Record” and 9.8.2.3.1 “Coring” as one course of action.

16.0 COMMUNICATION

The ability for the Level I PCC Technician to communicate with the Level II PCC Technician at the plant cannot be overemphasized. The most effective methods for communication are cellular phones or two-way portable radios.

Effective quality control at the plant requires the Level I PCC Technician to provide immediate notification of field test results. The weather conditions will change as the day progresses, and will affect the concrete mixture. Field observations are also to be reported by the Level I PCC Technician. These field observations should include mixture characteristics (Refer to 15.1 “Identifying Problems With A Concrete Mixture”), slump loss rate, workability, finishing characteristics, and bleed water rate. This field information will allow the Level II PCC Technician to diagnose problems at the plant, and to adjust the mixture before several delivery trucks leave for the jobsite.

By maintaining good communication between the plant and jobsite, concrete production can meet actual field production. As an example, pumping difficulties in the field are not unusual. There have been many instances for rejecting the entire load of concrete delivered, because the haul time expired.

17.0 DOCUMENTATION

For process control at the jobsite, the Level I PCC Technician shall complete the following documentation.

- Air Content, Slump, Unit Weight, Yield, Strength, and Other Tests — A bound, hardback field book or diary is acceptable for calculating and recording test results, and retest results. A plant or jobsite documentation example format is provided in Appendix J. For strength test results using the hand pump beam breaker, Form BMPR PCCW04, "Modulus of Rupture Worksheet for Concrete Beams," is available. To view or download the form on the Internet go to http://www.dot.il.gov/; Doing Business; Construction Guides; Materials; Materials Forms.

  If required by the Quality Control Manager, complete MISTIC forms BMPR MI654 and BMPR MI655. To view or download the form(s) on the Internet go to http://www.dot.il.gov/; Doing Business; Construction Guides; Materials; Materials Forms. Refer to Appendix K for instructions to complete the forms. Only field test results shall be recorded on MISTIC forms BMPR MI654 and BMPR MI655. The Level I PCC Technician may need to contact the Level II PCC Technician, to obtain the information requested on these forms.

- Miscellaneous - A bound, hardback field book or diary is acceptable for recording all observations, inspections, adjustments to the mix design, and corrective actions.

- Delivery Truck Ticket - Refer to the Special Provision For Quality Control/Quality Assurance of Concrete Mixtures, in Appendix A and Article 1020.11(a)(7). It is important to check the Department mix design number on the delivery ticket to ensure the correct mix is being delivered.

Forms BMPR MI654 and BMPR MI655 shall be submitted to the Engineer weekly or as required by the Engineer. The two forms, correctly completed, are also required to authorize payment by the Engineer.

In some cases, a District may have modified form BMPR MI654 or BMPR MI655. Therefore, the Level I PCC Technician shall check with the District office.

Information entered in a hardback field book or diary is never to be erased, whited-out, or eradicated in any manner. To correct information already entered, cross-out the information to be changed. When a change is made, the individual shall indicate their initials and the date of the change.

18.0 APPLICABLE SPECIFICATIONS

The Level I PCC Technician shall be familiar with the following Sections or Articles.

Article 285.05 Fabric Formed Concrete Revetment Mats

Article 312.26 Proportioning (Cement Aggregate Mixture II)

Section 1002. Water

Section 1020. Portland Cement Concrete

Article 1103.01. Concrete Mixers

To view or download the Standard Specifications for Road and Bridge Construction on the Internet go to http://www.dot.il.gov/; Doing Business; Construction Guides; BDE Specifications/Special Provisions/Highway Standards. In addition to the Standard Specifications, it is important for the Level I PCC Technician to be familiar with the Supplemental Specifications and Recurring Special Provisions document and the Bureau of Design and Environment (BDE) Special Provisions. They are also found under BDE Specifications/Special Provisions/Highway Standards and may be downloaded. The Supplemental Specifications are a supplement to the Standard Specifications. The Recurring Special Provisions are frequently included by reference, in selected contracts. The BDE special Provisions are frequently included by insertion, in selected contracts.

The Level I PCC Technician should also be familiar with Guide Bridge Special Provisions (GBSP). To view or download them go to http://www.dot.il.gov/; Doing Business; Constructions Guides; Bridge Guide Special Provisions (GBSP). The GBSP are frequently included by insertion, in selected contracts. As an example, the bridge deck fly ash or ground granulated blast-furnace slag overlay, microsilica overlay, high-reactivity metakaolin overlay, and latex concrete overlay Special Provisions are found in this area.

19.0 ADDITIONAL QC/QA DOCUMENT

The Level I PCC Technician shall be familiar with the Model Quality Control Plan for Concrete Production. Refer to Appendix L.

20.0 CONCRETE PLANT MIXER PERFORMANCE TEST

The Level I PCC Technician may sometime be involved with a concrete plant mixer performance test. The purpose of the test is to determine if the mixing time can be reduced for a concrete plant that produces stationary-mixed (central-mixed) concrete. Refer to Appendix M for additional information.

21.0 CONCRETE PLANT TESTS

The Level I PCC Technician may be required to provide assistance at the concrete plant, and may perform those tests referenced in Appendix N. For the aggregate moisture tests, a Level II PCC Technician will provide guidance. For the coarse aggregate voids test, a Level III PCC Technician will provide guidance.

Illinois Department of Transportation

PORTLAND CEMENT CONCRETE

LEVEL I

TECHNICIAN COURSE

APPENDICES

Effective: December 1, 1995
Revised: November 1, 2012

Appendix A

CHECK SHEET #30

State of Illinois
Department of Transportation

SPECIAL PROVISION
FOR
QUALITY CONTROL OF CONCRETE MIXTURES AT THE PLANT

Effective: August 1, 2000
Revised: January 1, 2011

Description. This Special Provision specifies the quality control responsibilities of the Contractor at the plant, for portland cement concrete mixtures, cement aggregate mixture II, and controlled low-strength material incorporated in the project, and defines the quality assurance and acceptance responsibilities of the Engineer.

A list of quality control/quality assurance (QC/QA) documents is provided in Schedule C.

Equipment/Laboratory. The Contractor shall provide a laboratory and test equipment to perform their quality control testing, as required in Schedule A.

The laboratory shall be of sufficient size and be furnished with the necessary equipment, supplies, and current published test methods for adequately and safely performing all required tests. The laboratory will be approved by the Engineer at the beginning of each construction season or each 12 month period. Production of a mixture shall not begin until the Engineer provides written approval of the laboratory. The Contractor shall refer to the Department's "Required Sampling and Testing Equipment for Concrete" for equipment requirements.

Test equipment shall be maintained and calibrated as required by the appropriate test method, and when required by the Engineer. This information shall be documented on the Department's "Calibration of Concrete Testing Equipment" form.

The Engineer shall have unrestricted access to the plant and laboratory at any time to inspect measuring and testing equipment, and will notify the Contractor of any deficiencies. Defective equipment shall be immediately repaired or replaced by the Contractor.

Plant/Delivery Trucks. The concrete plant and delivery trucks shall be approved according to the Department's Policy Memorandum "Approval of Concrete Plants and Delivery Trucks".

Quality Control Plan. The Contractor shall submit, in writing, a proposed Quality Control (QC) Plan, Part 2, to the Engineer. The QC Plan shall be submitted a minimum of 45 calendar days prior to the production of a mixture. The QC Plan shall address the quality control of the concrete, cement aggregate mixture II, and controlled low-strength material at the plant. The Contractor shall refer to the Department's "Model Quality Control Plan for Concrete Production" to prepare a QC Plan. The Engineer will respond in writing to the Contractor's proposed QC Plan within 15 calendar days of receipt.

CHECK SHEET #30

Production of a mixture shall not begin until the Engineer provides written approval of the QC Plan. The approved QC Plan shall become a part of the contract between the Department and the Contractor, but shall not be construed as acceptance of any mixture produced.

The QC Plan may be amended during the progress of the work, by either party, subject to mutual agreement. The Engineer will respond in writing to a Contractor's proposed QC Plan amendment within 15 calendar days of receipt. The response will indicate the approval or denial of the Contractor's proposed QC Plan amendment.

Plant Quality Control by Contractor. At the plant, the Contractor shall perform quality control inspection, sampling, testing, and documentation to meet contract requirements. Quality control includes the recognition of obvious defects and their immediate correction. Quality control also includes appropriate action when passing test results are near specification limits. Quality control may require increased testing, communication of test results to the plant or the jobsite, modification of operations, suspension of mixture production, rejection of material, or other actions as appropriate. The Engineer shall be immediately notified of any failing tests and subsequent remedial action. Passing tests shall be reported no later than the start of the next work day.

When a mixture does not comply with specifications, the Contractor shall reject the material; unless the Engineer accepts the material for incorporation in the work, according to Article 105.03 of the Standard Specifications.

(a) Personnel Requirements. The Contractor shall provide personnel to perform the required inspections, sampling, testing, and documentation in a timely manner. A Quality Control (QC) Manager will not be required. The Contractor shall refer to the Department's "Qualifications and Duties of Concrete Quality Control Personnel" document.

A Level II PCC Technician shall be provided at the plant, or shall be available, during mixture production and placement. A Level II PCC Technician may supervise a maximum of three plants. Whenever the Level II PCC Technician is not at the plant during mixture production and placement, a Concrete Tester or Level I PCC Technician shall be present at the plant to perform any necessary concrete tests. The Concrete Tester, Level I PCC Technician, or other individual shall also be trained to perform any necessary aggregate moisture tests, if the Level II PCC Technician is not at the plant during mixture production and placement. The Concrete Tester, Level I PCC Technician, plant personnel, and jobsite personnel shall have the ability to contact the Level II PCC Technician by cellular phone, two-way radio, or other methods approved by the Engineer.

A Concrete Tester may provide assistance with sampling and testing, and shall be supervised by a Level I or Level II PCC Technician.

(b) Required Plant Tests. Sampling and testing shall be performed at the plant, or at a location approved by the Engineer, to control the production of a mixture. The required minimum Contractor plant sampling and testing is indicated in Schedule A.

Plant Quality Assurance by Engineer. The Engineer will perform quality assurance tests on independent samples and split samples at the plant. An independent sample is a field sample obtained and tested by only one party. A split sample is one of two equal portions of a field sample, where two parties each receive one portion for testing. The Engineer may request the Contractor to obtain a split sample. Aggregate split samples and any failing strength specimen shall be retained until permission is given by the Engineer for disposal. The results of all quality

assurance tests by the Engineer will be made available to the Contractor. However, Contractor split sample test results shall be provided to the Engineer before Department test results are revealed. The Engineer's quality assurance independent sample and split sample testing is indicated in Schedule B.

(a) Comparing Test Results. Differences between the Engineer's and the Contractor's split sample test results will not be considered extreme if within the following limits:

Test Parameter	Acceptable Limits of Precision
Slump	0.75 in. (20 mm)
Air Content	0.9%
Aggregate Gradation	See "Guideline for Sample Comparison" in Appendix "A" of the Manual of Test Procedures for Materials.

When acceptable limits of precision have been met, but only one party is within specification limits, the failing test shall be resolved before the material may be considered for acceptance.

(b) Test Results and Specification Limits. Split sample and independent sample testing shall be as follows.

(1) Split Sample Testing. If either the Engineer's or the Contractor's split sample test result is not within specification limits, and the other party is within specifications limits; immediate retests on a split sample shall be performed for slump, air content, or aggregate gradation. A passing retest result by each party will require no further action. If either the Engineer's or Contractor's slump, air content, or aggregate gradation split sample retest result is a failure; or if either the Engineer's or Contractor's strength test result is a failure, and the other party is within specification limits; the following actions shall be initiated to investigate the test failure:

a. The Engineer and the Contractor shall investigate the sampling method, test procedure, equipment condition, equipment calibration, and other factors.

b. The Engineer or the Contractor shall replace test equipment, as determined by the Engineer.

c. The Engineer and the Contractor shall perform additional testing on split samples, as determined by the Engineer.

For aggregate gradation, plant slump, and plant air content: if the failing split sample test result is not resolved according to a., b., or c., and the mixture has not been placed, the Contractor shall reject the material; unless the Engineer accepts the material for incorporation in the work according to Article 105.03 of the Standard Specifications. If the mixture has already been placed, the material will be considered unacceptable.

If a continued trend of difference exists between the Engineer's and the Contractor's split sample test results, or if split sample test results exceed the acceptable limits of precision, the Engineer and the Contractor shall investigate according to a., b., or c.

(2) Independent Sample Testing. For aggregate gradation, plant slump, and plant air content; if the result of a quality assurance test on a sample independently obtained by the Engineer is not within specification limits, and the mixture has not been placed, the Contractor shall reject the material, unless the Engineer accepts the material for incorporation in the work according to Article 105.03 of the Standard Specifications. If the mixture has already been placed, the material will be considered unacceptable.

Jobsite Acceptance Testing by the Engineer. The Engineer will perform acceptance testing at the jobsite for slump, air content, and strength.

Acceptance by the Engineer. Final acceptance will be based on the Standard Specifications and the following:

(a) The Contractor's compliance with all contract documents for quality control.

(b) Comparison of the Engineer's jobsite acceptance test results with specification limits, using samples independently obtained by the Engineer.

(c) Validation of Contractor plant quality control test results by comparison with the Engineer's quality assurance test results using split samples. Any quality control or quality assurance test determined to be flawed may be declared invalid only when reviewed and approved by the Engineer. The Engineer will declare a test result invalid only if it is proven that improper sampling or testing occurred. The test result is to be recorded and the reason for declaring the test invalid will be provided by the Engineer.

(d) Comparison of the Engineer's plant quality assurance test results with specification limits using samples independently obtained by the Engineer.

The Engineer may suspend mixture production, reject materials, or take other appropriate action if the Contractor does not control the quality of concrete, cement aggregate mixture II, or controlled low-strength material for acceptance. The decision will be determined according to (a), (b), (c), and (d).

Documentation. The Contractor shall be responsible for documenting all observations, inspections, adjustments to the mix design, test results, retest results, and corrective actions in a bound hardback field book, bound hardback diary, or appropriate Department form, which shall become the property of the Department. The documentation shall include a method to compare the Engineer's test results with the Contractor's results. The Contractor shall be responsible for the maintenance of all permanent records whether obtained by the Contractor, the consultants, subcontractors, or the producer of the mixture. The Contractor shall provide the Engineer full access to all documentation throughout the progress of the work.

The Department's form MI 504M shall be completed by the Contractor, and shall be submitted to the Engineer weekly or as required by the Engineer. A correctly completed Form MI 504M is required to authorize payment by the Engineer, for applicable pay items.

The Engineer will be responsible for completing form MI 654 and form MI 655.

Basis of Payment. Quality Control of Concrete Mixtures at the Plant will not be paid for separately, but shall be considered as included in the cost of the various types of concrete mixtures required to construct the work items included in the contract.

SCHEDULE A

CONTRACTOR PLANT SAMPLING AND TESTING - DOUBLE A			
Item	Test	Frequency	IL Modified AASHTO, IL Modified ASTM, or Department Test Method [1/]
Aggregates (Arriving at Plant)	Gradation [2/]	As needed to check source for each gradation number	T 2, T 11, T 27, and T 248
Aggregates (Stored at Plant in Stockpiles or Bins)	Gradation [2/]	2,500 cu yd (1,900 cu m) for each gradation number [3/]	T 2, T 11, T 27, and T 248
Aggregates (Stored at Plant in Stockpiles or Bins)	Moisture: [4/] Fine Aggregate	Once per week for moisture sensor, otherwise daily for each gradation number	Flask, Dunagan, Pychnometer Jar, or T 255
	Moisture: [4/] Coarse Aggregate	As needed to control production for each gradation number	Dunagan, Pychnometer Jar, or T 255
Mixture [5/]	Slump, Air Content, Unit Weight / Yield, and Temperature	As needed to control production	T 141 and T 119 T 141 and T 152 or T 196 T 141 and T 121 T 141 and ASTM C 1064

1/ Refer to the Department's "Manual of Test Procedures for Materials".

2/ All gradation tests shall be washed. Testing shall be completed no later than 24 hours after the aggregate has been sampled.

3/ One per week (Sunday through Saturday) minimum unless the stockpile has not received additional aggregate material since the previous test.

One per day minimum for a bridge deck pour unless the stockpile has not received additional aggregate material since the previous test. The sample shall be taken and testing completed prior to the pour. The bridge deck aggregate sample may be taken the day before the pour or as approved by the Engineer.

4/ If the moisture test and moisture sensor disagree by more than 0.5 percent, retest. If the difference remains, adjust the moisture sensor to an average of two or more moisture tests, using the Dunagan or Illinois Modified AASHTO T 255 test method. The Department's "Water/Cement Ratio Worksheet" form shall be completed when applicable.

5/ The Contractor may also perform strength testing according to Illinois Modified AASHTO T 141, T 23, and T 22 or T 177; or water content testing according to Illinois Modified AASHTO T 318; or other tests at the plant to control mixture production.

CHECK SHEET #30

SCHEDULE B

ENGINEER QUALITY ASSURANCE INDEPENDENT SAMPLE TESTING		
Location	Measured Property	Testing Frequency 1/
Plant	Gradation of aggregates stored in stockpiles or bins, Slump and Air Content	As determined by the Engineer.

ENGINEER QUALITY ASSURANCE SPLIT SAMPLE TESTING		
Location	Measured Property	Testing Frequency 1/
Plant	Gradation of aggregates stored in stockpiles or bins 2/	At the beginning of the project, the first test performed by the Contractor. Thereafter, a minimum of 10% of total tests required of the Contractor will be performed per aggregate gradation number and per plant.
	Slump and Air Content 2/	As determined by the Engineer.

1/ The Engineer will perform the testing throughout the period of quality control testing by the Contractor.

2/ The Engineer will witness and take immediate possession of or otherwise secure the Department's split sample obtained by the Contractor.

CHECK SHEET #30

SCHEDULE C

IDOT CONCRETE QUALITY CONTROL AND QUALITY ASSURANCE DOCUMENTS

(a) Model Quality Control Plan for Concrete Production (*)

(b) Qualifications and Duties of Concrete Quality Control Personnel (*)

(c) Development of Gradation Bands on Incoming Aggregate at Mix Plants (*)

(d) Required Sampling and Testing Equipment for Concrete (*)

(e) Calibration of Concrete Testing Equipment (*)

(f) Water/Cement Ratio Worksheet (BMPR PCCW01) (*)

(g) Field/Lab Gradations (MI 504 M) (*)

(h) Aggregate Technician Course or Mixture Aggregate Technician Course (*)

(i) Portland Cement Concrete Tester Course (*)

(j) Portland Cement Concrete Level I Technician Course – Manual of Instructions for Concrete Testing (*)

(k) Portland Cement Concrete Level II Technician Course – Manual of Instructions for Concrete Proportioning (*)

(l) Portland Cement Concrete Level III Technician Course – Manual of Instructions for Design of Concrete Mixtures (*)

(m) Manual of Test Procedures for Materials

* Refer to the Manual of Test Procedures for Materials for more information.

This Page Reserved

QUALITY CONTROL/QUALITY ASSURANCE OF CONCRETE MIXTURES (BDE)

Effective: January 1, 2012
Revised: January 1, 2013

Add the following to Section 1020 of the Standard Specifications:

"**1020.16 Quality Control/Quality Assurance of Concrete Mixtures**. This Article specifies the quality control responsibilities of the Contractor for concrete mixtures (except Class PC and PS concrete), cement aggregate mixture II, and controlled low-strength material incorporated in the project, and defines the quality assurance and acceptance responsibilities of the Engineer.

A list of quality control/quality assurance (QC/QA) documents is provided in Article 1020.16(g), Schedule D.

A Level I Portland Cement Concrete (PCC) Technician shall be defined as an individual who has successfully completed the Department's training for concrete testing.

A Level II Portland Cement Concrete (PCC) Technician shall be defined as an individual who has successfully completed the Department's training for concrete proportioning.

A Level III Portland Cement Concrete (PCC) Technician shall be defined as an individual who has successfully completed the Department's training for concrete mix design.

A Concrete Tester shall be defined as an individual who has successfully completed the Department's training to assist with concrete testing and is monitored on a daily basis.

Aggregate Technician shall be defined as an individual who has successfully completed the Department's training for gradation testing involving aggregate production and mixtures.

Mixture Aggregate Technician shall be defined as an individual who has successfully completed the Department's training for gradation testing involving mixtures.

Gradation Technician shall be defined as an individual who has successfully completed the Department's training to assist with gradation testing and is monitored on a daily basis.

(a) Equipment/Laboratory. The Contractor shall provide a laboratory and test equipment to perform their quality control testing.

The laboratory shall be of sufficient size and be furnished with the necessary equipment, supplies, and current published test methods for adequately and safely performing all required tests. The laboratory will be approved by the Engineer according to the current Bureau of Materials and Physical Research Policy Memorandum "Minimum Private Laboratory Requirements for Construction Materials Testing or Mix Design". Production of a mixture shall not begin until the Engineer provides written approval of the laboratory. The Contractor shall refer to the Department's "Required Sampling and Testing Equipment for Concrete" for equipment requirements.

Test equipment shall be maintained and calibrated as required by the appropriate test method, and when required by the Engineer. This information shall be documented on the Department's "Calibration of Concrete Testing Equipment" form.

Test equipment used to determine compressive or flexural strength shall be calibrated each 12 month period by an independent agency, using calibration equipment traceable to the National Institute of Standards and Technology (NIST). The Contractor shall have the calibration documentation available at the test equipment location.

The Engineer will have unrestricted access to the plant and laboratory at any time to inspect measuring and testing equipment, and will notify the Contractor of any deficiencies. Defective equipment shall be immediately repaired or replaced by the Contractor.

(b) Quality Control Plan. The Contractor shall submit, in writing, a proposed Quality Control (QC) Plan to the Engineer. The QC Plan shall be submitted a minimum of 45 calendar days prior to the production of a mixture. The QC Plan shall address the quality control of the concrete, cement aggregate mixture II, and controlled low-strength material incorporated in the project. The Contractor shall refer to the Department's "Model Quality Control Plan for Concrete Production" to prepare a QC Plan. The Engineer will respond in writing to the Contractor's proposed QC Plan within 15 calendar days of receipt.

Production of a mixture shall not begin until the Engineer provides written approval of the QC Plan. The approved QC Plan shall become a part of the contract between the Department and the Contractor, but shall not be construed as acceptance of any mixture produced.

The QC Plan may be amended during the progress of the work, by either party, subject to mutual agreement. The Engineer will respond in writing to a Contractor's proposed QC Plan amendment within 15 calendar days of receipt. The response will indicate the approval or denial of the Contractor's proposed QC Plan amendment.

(c) Quality Control by Contractor. The Contractor shall perform quality control inspection, sampling, testing, and documentation to meet contract requirements. Quality control includes the recognition of obvious defects and their immediate correction. Quality control also includes appropriate action when passing test results are near specification limits, or to resolve test result differences with the Engineer. Quality control may require increased testing, communication of test results to the plant or the jobsite, modification of operations, suspension of mixture production, rejection of material, or other actions as appropriate. The Engineer shall be immediately notified of any failing tests and subsequent remedial action. Passing tests shall be reported no later than the start of the next work day.

When a mixture does not comply with specifications, the Contractor shall reject the material; unless the Engineer accepts the material for incorporation in the work, according to Article 105.03.

(1) Personnel Requirements. The Contractor shall provide a Quality Control (QC) Manager who will have overall responsibility and authority for quality control. The jobsite and plant personnel shall be able to contact the QC Manager by cellular phone, two-way radio or other methods approved by the Engineer.

The QC Manager shall visit the jobsite a minimum of once a week. A visit shall be performed the day of a bridge deck pour, the day a non-routine mixture is placed as determined by the Engineer, or the day a plant is anticipated to produce more than 1000 cu yd (765 cu m). Any of the three required visits may be used to meet the once per week minimum requirement.

The Contractor shall provide personnel to perform the required inspections, sampling, testing and documentation in a timely manner. The Contractor shall refer to the Department's "Qualifications and Duties of Concrete Quality Control Personnel" document.

A Level I PCC Technician shall be provided at the jobsite during mixture production and placement, and may supervise concurrent pours on the project. For concurrent pours, a minimum of one Concrete Tester shall be required at each pour location. If the Level I PCC Technician is at one of the pour locations, a Concrete Tester is still required at the same location. Each Concrete Tester shall be able to contact the Level I PCC Technician by cellular phone, two-way radio or other methods approved by the Engineer. A single Level I PCC Technician shall not supervise concurrent pours for multiple contracts.

A Level II PCC Technician shall be provided at the plant, or shall be available, during mixture production and placement. A Level II PCC Technician may supervise a maximum of three plants. Whenever the Level II PCC Technician is not at the plant during mixture production and placement, a Concrete Tester or Level I PCC Technician shall be present at the plant to perform any necessary concrete tests. The Concrete Tester, Level I PCC Technician, or other individual shall also be trained to perform any necessary aggregate moisture tests, if the Level II PCC Technician is not at the plant during mixture production and placement. The Concrete Tester, Level I PCC Technician, plant personnel, and jobsite personnel shall have the ability to contact the Level II PCC Technician by cellular phone, two-way radio, or other methods approved by the Engineer.

For a mixture which is produced and placed with a mobile portland cement concrete plant as defined in Article 1103.04, a Level II PCC Technician shall be provided. The Level II PCC Technician shall be present at all times during mixture production and placement. However, the Level II PCC Technician may request to be available if operations are satisfactory. Approval shall be obtained from the Engineer, and jobsite personnel shall have the ability to contact the Level II PCC Technician by cellular phone, two-way radio, or other methods approved by the Engineer.

A Concrete Tester, Mixture Aggregate Technician, and Aggregate Technician may provide assistance with sampling and testing. A Gradation Technician may provide assistance with testing. A Concrete Tester shall be supervised by a Level I or Level II PCC Technician. A Gradation Technician shall be supervised by a Level II PCC Technician, Mixture Aggregate Technician, or Aggregate Technician.

(2) Required Plant Tests. Sampling and testing shall be performed at the plant, or at a location approved by the Engineer, to control the production of a mixture. The required minimum Contractor plant sampling and testing is indicated in Article 1020.16(g) Schedule A.

(3) Required Field Tests. Sampling and testing shall be performed at the jobsite to control the production of a mixture, and to comply with specifications for placement. For standard curing, after initial curing, and for strength testing; the location shall be approved by the Engineer. The required minimum Contractor jobsite sampling and testing is indicated in Article 1020.16(g), Schedule B.

(d) Quality Assurance by Engineer. The Engineer will perform quality assurance tests on independent samples and split samples. An independent sample is a field sample obtained and tested by only one party. A split sample is one of two equal portions of a field sample, where two parties each receive one portion for testing. The Engineer may request the Contractor to obtain a split sample. Aggregate split samples and any failing strength specimen shall be retained until permission is given by the Engineer for disposal. The results of all quality assurance tests by the Engineer will be made available to the Contractor. However, Contractor split sample test results shall be provided to the Engineer before Department test results are revealed. The Engineer's quality assurance independent sample and split sample testing is indicated in Article 1020.16(g), Schedule C.

(1) Strength Testing. For strength testing, Article 1020.09 shall apply, except the Contractor and Engineer strength specimens may be placed in the same field curing box for initial curing and may be cured in the same water storage tank for final curing.

(2) Comparing Test Results. Differences between the Engineer's and the Contractor's split sample test results will be considered reasonable if within the following limits:

Test Parameter	Acceptable Limits of Precision
Slump	0.75 in. (20 mm)
Air Content	0.9%
Compressive Strength	900 psi (6200 kPa)
Flexural Strength	90 psi (620 kPa)
Slump Flow (Self-Consolidating Concrete (SCC))	1.5 in. (40 mm)
Visual Stability Index (SCC)	Not Applicable
J-Ring (SCC)	1.5 in. (40 mm)
L-Box (SCC)	10 %
Hardened Visual Stability Index (SCC)	Not Applicable
Dynamic Segregation Index (SCC)	1.0 %
Flow (Controlled Low-Strength Material (CLSM))	1.5 in. (40 mm)
Strength (Controlled Low-Strength Material (CLSM))	40 psi (275 kPa)
Aggregate Gradation	See "Guideline for Sample Comparison" in Appendix "A" of the Manual of Test Procedures for Materials.

When acceptable limits of precision have been met, but only one party is within specification limits, the failing test shall be resolved before the material may be considered for acceptance.

(3)Test Results and Specification Limits.

a. Split Sample Testing. If either the Engineer's or the Contractor's split sample test result is not within specification limits, and the other party is within specification limits; immediate retests on a split sample shall be performed for slump, air content, slump flow, visual stability index, J-Ring, L-Box, dynamic segregation index, flow (CLSM), or aggregate gradation. A passing retest result by each party will require no further action. If either the Engineer's or Contractor's slump, air content, slump flow, visual stability index, J-Ring, L-Box, dynamic segregation index, flow (CLSM), or aggregate gradation split sample retest result is a failure; or if either the Engineer's or Contractor's strength or hardened visual stability

index test result is a failure, and the other party is within specification limits; the following actions shall be initiated to investigate the test failure:

1. The Engineer and the Contractor shall investigate the sampling method, test procedure, equipment condition, equipment calibration, and other factors.

2. The Engineer or the Contractor shall replace test equipment, as determined by the Engineer.

3. The Engineer and the Contractor shall perform additional testing on split samples, as determined by the Engineer.

For aggregate gradation, jobsite slump, jobsite air content, jobsite slump flow, jobsite visual stability index, jobsite J-Ring, jobsite L-Box, jobsite dynamic segregation index, and jobsite flow (CLSM); if the failing split sample test result is not resolved according to 1., 2., or 3., and the mixture has not been placed, the Contractor shall reject the material; unless the Engineer accepts the material for incorporation in the work according to Article 105.03. If the mixture has already been placed, or if a failing strength or hardened visual stability index test result is not resolved according to 1., 2., or 3., the material will be considered unacceptable.

If a continued trend of difference exists between the Engineer's and the Contractor's split sample test results, or if split sample test results exceed the acceptable limits of precision, the Engineer and the Contractor shall investigate according to items 1., 2., and 3.

b. Independent Sample Testing. For aggregate gradation, jobsite slump, jobsite air content jobsite slump flow, jobsite visual stability index, jobsite J-Ring, jobsite L-Box, jobsite dynamic segregation index, jobsite flow (CLSM); if the result of a quality assurance test on a sample independently obtained by the Engineer is not within specification limits, and the mixture has not been placed, the Contractor shall reject the material, unless the Engineer accepts the material for incorporation in the work according to Article 105.03. If the mixture has already been placed or the Engineer obtains a failing strength or hardened visual stability index test result, the material will be considered unacceptable.

(e) Acceptance by the Engineer. Final acceptance will be based on the Standard Specifications and the following:

(1) The Contractor's compliance with all contract documents for quality control.

(2) Validation of Contractor quality control test results by comparison with the Engineer's quality assurance test results using split samples. Any quality control or quality assurance test determined to be flawed may be declared invalid only when reviewed and approved by the Engineer. The Engineer will declare a test result invalid only if it is proven that improper sampling or testing occurred. The test result is to be recorded and the reason for declaring the test invalid will be provided by the Engineer.

(3) Comparison of the Engineer's quality assurance test results with specification limits using samples independently obtained by the Engineer.

The Engineer may suspend mixture production, reject materials, or take other appropriate action if the Contractor does not control the quality of concrete, cement aggregate mixture II, or controlled low-strength material for acceptance. The decision will be determined according to (1), (2), or (3).

(f) Documentation.

(1) Records. The Contractor shall be responsible for documenting all observations, inspections, adjustments to the mix design, test results, retest results, and corrective actions in a bound hardback field book, bound hardback diary, or appropriate Department form, which shall become the property of the Department. The documentation shall include a method to compare the Engineer's test results with the Contractor's results. The Contractor shall be responsible for the maintenance of all permanent records whether obtained by the Contractor, the consultants, the subcontractors, or the producer of the mixture. The Contractor shall provide the Engineer full access to all documentation throughout the progress of the work.

The Department's form MI 504M, form BMPR MI654, and form BMPR MI655 shall be completed by the Contractor, and shall be submitted to the Engineer weekly or as required by the Engineer. A correctly completed form MI 504M, form BMPR MI654, and form BMPR MI655 are required to authorize payment by the Engineer, for applicable pay items.

(2) Delivery Truck Ticket. The following information shall be recorded on each delivery ticket or in a bound hardback field book: initial revolution counter reading (final reading optional) at the jobsite, if the mixture is truck-mixed; time discharged at the jobsite; total amount of each admixture added at the jobsite; and total amount of water added at the jobsite.

(g) Basis of Payment and Schedules. Quality Control/Quality Assurance of portland cement concrete mixtures will not be paid for separately, but shall be considered as included in the cost of the various concrete contract items.

SCHEDULE A

CONTRACTOR PLANT SAMPLING AND TESTING			
Item	Test	Frequency	IL Modified AASHTO or Department Test Method 1/
Aggregates (Arriving at Plant)	Gradation 2/	As needed to check source for each gradation number	2, 11, 27, and 248
Aggregates (Stored at Plant in Stockpiles or Bins)	Gradation 2/	2,500 cu yd (1,900 cu m) for each gradation number 3/	2, 11, 27, and 248
Aggregates (Stored at Plant in Stockpiles or Bins)	Moisture 4/: Fine Aggregate	Once per week for moisture sensor, otherwise daily for each gradation number	Flask, Dunagan, Pychnometer Jar, or 255
	Moisture 4/: Coarse Aggregate	As needed to control production for each gradation number	Dunagan, Pychnometer Jar, or 255
Mixture 5/	Slump Air Content Unit Weight / Yield Slump Flow (SCC) Visual Stability Index (SCC) J-Ring (SCC) 6/ L-Box (SCC) 6/ Temperature	As needed to control production	T 141 and T 119 T 141 and T 152 or T 196 T 141 and T 121 SCC-1 and SCC-2 SCC-1 and SCC-2 SCC-1 and SCC-3 SCC-1 and SCC-4 T 141 and T 309
Mixture (CLSM) 7/	Flow Air Content Temperature	As needed to control production	Illinois Test Procedure 307

1/ Refer to the Department's "Manual of Test Procedures for Materials".

2/ All gradation tests shall be washed. Testing shall be completed no later than 24 hours after the aggregate has been sampled.

3/ One per week (Sunday through Saturday) minimum unless the stockpile has not received additional aggregate material since the previous test.

One per day minimum for a bridge deck pour unless the stockpile has not received additional aggregate material since the previous test. The sample shall be taken and testing completed prior to the pour. The bridge deck aggregate sample may be taken the day before the pour or as approved by the Engineer.

4/ If the moisture test and moisture sensor disagree by more than 0.5 percent, retest. If the difference remains, adjust the moisture sensor to an average of two or more moisture tests. The Department's "Water/Cement Ratio Worksheet" form shall be completed when applicable.

5/ The Contractor may also perform strength testing according to Illinois Modified AASHTO T 141, T 23, and T 22 or T 177; or water content testing according to Illinois Modified AASHTO T 318.

The Contractor may also perform other available self-consolidating concrete (SCC) tests at the plant to control mixture production.

6/ The Contractor shall select the J-Ring or L-Box test for plant sampling and testing.

7/ The Contractor may also perform strength testing according to Illinois Test Procedure 307.

SCHEDULE B

CONTRACTOR JOBSITE SAMPLING & TESTING [1/]			
Item	Measured Property	Random Sample Testing Frequency per Mix Design and per Plant [2/]	IL Modified AASHTO Test Method
Pavement, Shoulder, Base Course, Base Course Widening, Driveway Pavement, Railroad Crossing, Cement Aggregate Mixture II	Slump [3/ 4/]	1 per 500 cu yd (400 cu m) or minimum 1/day	T 141 and T 119
	Air Content [3/ 5/ 6/]	1 per 100 cu yd (80 cu m) or minimum 1/day	T 141 and T 152 or T 196
	Compressive Strength [7/ 8/] or Flexural Strength [7/ 8/]	1 per 1250 cu yd (1000 cu m) or minimum 1/day	T 141, T 22 and T 23 or T 141, T 177 and T 23
Bridge Approach Slab [9/], Bridge Deck [9/], Bridge Deck Overlay [9/], Superstructure [9/], Substructure, Culvert, Miscellaneous Drainage Structures, Retaining Wall, Building Wall, Drilled Shaft Pile & Encasement Footing, Foundation, Pavement Patching, Structural Repairs	Slump [3/ 4/]	1 per 50 cu yd (40 cu m) or minimum 1/day	T 141 and T 119
	Air Content [3/ 5/ 6/]	1 per 50 cu yd (40 cu m) or minimum 1/day	T 141 and T 152 or T 196
	Compressive Strength [7/ 8/] or Flexural Strength [7/ 8/]	1 per 250 cu yd (200 cu m) or minimum 1/day	T 141, T 22 and T 23 or T 141, T 177 and T 23
Seal Coat	Slump [3/]	1 per 250 cu yd (200 cu m) or minimum 1/day	T 141 and T 119
	Air Content [3/ 5/ 6/]	1 per 250 cu yd (200 cu m) or minimum 1/day when air is entrained	T 141 and T 152 or T 196
	Compressive Strength [7/ 8/] or Flexural Strength [7/ 8/]	1 per 250 cu yd (200 cu m) or minimum 1/day	T 141, T 22 and T 23 or T 141, T 177 and T 23
Curb, Gutter, Median, Barrier, Sidewalk, Slope Wall, Paved Ditch, Fabric Formed Concrete Revetment Mat [10/], Miscellaneous Items, Incidental Items	Slump [3/ 4/]	1 per 100 cu yd (80 cu m) or minimum 1/day	T 141 and T 119
	Air Content [3/ 5/ 6/]	1 per 50 cu yd (40 cu m) or minimum 1/day	T 141 and T 152 or T 196
	Compressive Strength [7/ 8/] or Flexural Strength [7/ 8/]	1 per 400 cu yd (300 cu m) or minimum 1/day	T 141, T 22 and T 23 or T 141, T 177 and T 23

CONTRACTOR JOBSITE SAMPLING & TESTING [1/]			
The Item will use a Self-Consolidating Concrete Mixture	Slump Flow [3/] VSI [3/] J-Ring [3/ 11/] L-Box [3/ 11/]	Perform at same frequency that is specified for the Item's slump	SCC-1 & SCC-2 SCC-1 & SCC-2 SCC-1 & SCC-3 SCC-1 & SCC-4
The Item will use a Self-Consolidating Concrete Mixture	HVSI [12/]	Minimum 1/day at start of production for that day	SCC-1 and SCC-6
The Item will use a Self-Consolidating Concrete Mixture	Dynamic Segregation Index (DSI)	Minimum 1/week at start of production for that week	SCC-1 and SCC-8 (Option C)
The Item will use a Self-Consolidating Concrete Mixture	Air Content [3/ 5/ 6/]	Perform at same frequency that is specified for the Item's air content	SCC-1 and T 152 or T 196
The Item will use a Self-Consolidating Concrete Mixture	Compressive Strength 7/ 8/ or Flexural Strength [7/ 8/]	Perform at same frequency that is specified for the Item's strength	SCC-1, T 22 and T 23 or SCC-1, T 177 and T 23
All	Temperature [3/]	As needed to control production	T 141 and T 309
Controlled Low-Strength Material (CLSM)	Flow, Air Content, Compressive Strength (28-day) [13/], and Temperature	First truck load delivered and as needed to control production thereafter	Illinois Test Procedure 307

1/ Sampling and testing of small quantities of curb, gutter, median, barrier, sidewalk, slope wall, paved ditch, miscellaneous items, and incidental items may be waived by the Engineer if requested by the Contractor. However, quality control personnel are still required according to Article 1020.16(c)(1) The Contractor shall also provide recent evidence that similar material has been found to be satisfactory under normal sampling and testing procedures. The total quantity that may be waived for testing shall not exceed 100 cu yd (76 cu m) per contract.

If the Contractor's or Engineer's test result for any jobsite mixture test is not within the specification limits, all subsequent truck loads delivered shall be tested by the Contractor until the problem is corrected.

2/ If one mix design is being used for several construction items during a day's production, one testing frequency may be selected to include all items. The construction items shall have the same slump, air content, and water/cement ratio specifications. For self-consolidating concrete, the construction items shall have the same slump flow, visual stability index, J-Ring, L-Box, air content, and water/cement ratio specifications. The frequency selected shall equal or exceed the testing required for the construction item.

One sufficiently sized sample shall be taken to perform the required test(s). Random numbers shall be determined according to the Department's "Method for Obtaining Random Samples for Concrete". The Engineer will provide random sample locations.

3/ The temperature, slump, and air content tests shall be performed on the first truck load delivered, for each pour. For self consolidating concrete, the temperature, slump flow, visual stability index, J-Ring or L-Box, and air content tests shall be performed on the first truck load delivered, for each pour. Unless a random sample is required for the first truck load, testing the first truck load does not satisfy random sampling requirements.

4/ The slump random sample testing frequency shall be a minimum 1/day for a construction item which is slipformed.

5/ If a pump or conveyor is used for placement, a correction factor shall be established to allow for a loss of air content during transport. The first three truck loads delivered shall be tested, before and after transport by the pump or conveyor, to establish the correction factor. Once the correction is determined, it shall be re-checked after an additional 50 cu yd (40 cu m) is pumped, or an additional 100 cu yd (80 cu m) is conveyored. This shall continue throughout the pour. If the re-check indicates the correction factor has changed, a minimum of two truckloads is required to re-establish the correction factor. The correction factor shall also be re-established when significant changes in temperature, distance, pump or conveyor arrangement, and other factors have occurred. If the correction factor is >3.0 percent, the Contractor shall take corrective action to reduce the loss of air content during transport by the pump or conveyor. The Contractor shall record all air content test results, correction factors and corrected air contents. The corrected air content shall be reported on form BMPR MI654.

6/ If the Contractor's or Engineer's air content test result is within the specification limits, and 0.2 percent or closer to either limit, the next truck load delivered shall be tested by the Contractor. For example, if the specified air content range is 5.0 to 8.0 percent and the test result is 5.0, 5.1, 5.2, 7.8, 7.9 or 8.0 percent, the next truck shall be tested by the Contractor.

7/ The test of record for strength shall be the day indicated in Article 1020.04. For cement aggregate mixture II, a strength requirement is not specified and testing is not required. Additional strength testing to determine early falsework and form removal, early pavement or bridge opening to traffic, or to monitor strengths is at the discretion of the Contractor. Strength shall be defined as the average of at least two cylinder or two beam breaks for field tests.

8/ In addition to the strength test, a slump test, air content test, and temperature test shall be performed on the same sample. For self-consolidating concrete, a slump flow test, visual stability index test, J-Ring or L-Box test, air content test, and temperature test shall be performed on the same sample as the strength test. For mixtures pumped or conveyored, the Contractor shall sample according to Illinois Modified AASHTO T 141.

9/ The air content test will be required for each delivered truck load.

10/ For fabric formed concrete revetment mat, the slump test is not required and the flexural strength test is not applicable.

11/ The Contractor shall select the J-Ring or L-Box test for jobsite sampling and testing.

12/ In addition to the hardened visual stability index (HVSI) test, a slump flow test, visual stability index (VSI) test, J-Ring or L-Box test, air content test, and temperature test shall be performed on the same sample. The Contractor shall retain all hardened visual stability index cut cylinder specimens until the Engineer notifies the Contractor that the specimens may be discarded.

13/ The test of record for strength shall be the day indicated in Article 1019.04. In addition to the strength test, a flow test, air content test, and temperature test shall be performed on the same sample. The strength test may be waived by the Engineer if future removal of the material is not a concern.

SCHEDULE C

ENGINEER QUALITY ASSURANCE INDEPENDENT SAMPLE TESTING		
Location	Measured Property	Testing Frequency 1/
Plant	Gradation of aggregates stored in stockpiles or bins, Slump and Air Content	As determined by the Engineer.
Jobsite	Slump, Air Content, Slump Flow, Visual Stability Index, J-Ring, L-Box, Hardened Visual Stability Index, Dynamic Segregation Index and Strength	As determined by the Engineer.
	Flow, Air Content, Strength (28-day), and Dynamic Cone Penetration for Controlled Low-Strength Material (CLSM)	As determined by the Engineer

ENGINEER QUALITY ASSURANCE SPLIT SAMPLE TESTING		
Location	Measured Property	Testing Frequency 1/
Plant	Gradation of aggregates stored in stockpiles or bins 2/	At the beginning of the project, the first test performed by the Contractor. Thereafter, a minimum of 10% of total tests required of the Contractor will be performed per aggregate gradation number and per plant.
	Slump and Air Content	As determined by the Engineer.
Jobsite	Slump 2/, Air Content 2/ 3/, Slump Flow 2/, Visual Stability Index 2/, J-Ring 2/ and L-box 2/	At the beginning of the project, the first three tests performed by the Contractor. Thereafter, a minimum of 20% of total tests required of the Contractor will be performed per plant, which will include a minimum of one test per mix design.
	Hardened Visual Stability Index 2/	As determined by the Engineer.
	Dynamic Segregation Index 2/	As determined by the Engineer.
	Strength 2/	At the beginning of the project, the first test performed by the Contractor. Thereafter, a minimum of 20% of total tests required of the Contractor will be performed per plant, which will include a minimum of one test per mix design.
	Flow, Air Content, and Strength (28-day) for Controlled Low-Strength Material (CLSM)	As determined by the Engineer.

1/ The Engineer will perform the testing throughout the period of quality control testing by the Contractor.

2/ The Engineer will witness and take immediate possession of or otherwise secure the Department's split sample obtained by the Contractor.

3/ Before transport by pump or conveyor, a minimum of 20 percent of total tests required of the Contractor will be performed per mix design and per plant. After transport by pump or conveyor, a minimum of 20 percent of total tests required of the Contractor will be performed per mix design and per plant.

SCHEDULE D

CONCRETE QUALITY CONTROL AND QUALITY ASSURANCE DOCUMENTS

(a) Model Quality Control Plan for Concrete Production (*)

(b) Qualifications and Duties of Concrete Quality Control Personnel (*)

(c) Development of Gradation Bands on Incoming Aggregate at Mix Plants (*)

(d) Required Sampling and Testing Equipment for Concrete (*)

(e) Method for Obtaining Random Samples for Concrete (*)

(f) Calibration of Concrete Testing Equipment (BMPR PCCQ01 through BMPR PCCQ09) (*)

(g) Water/Cement Ratio Worksheet (BMPR PCCW01) (*)

(h) Field/Lab Gradations (MI 504M) (*)

(i) Concrete Air, Slump and Quantity (BMPR MI654) (*)

(j) P.C. Concrete Strengths (BMPR MI655) (*)

(k) Aggregate Technician Course or Mixture Aggregate Technician Course (*)

(l) Portland Cement Concrete Tester Course (*)

(m) Portland Cement Concrete Level I Technician Course - Manual of Instructions for Concrete Testing (*)

(n) Portland Cement Concrete Level II Technician Course - Manual of Instructions for Concrete Proportioning (*)

(o) Portland Cement Concrete Level III Technician Course - Manual of Instructions for Design of Concrete Mixtures (*)

(p) Manual of Test Procedures for Materials

* Refer to Appendix C of the Manual of Test Procedures for Materials for more information."

80281

Appendix B

ILLINOIS DEPARTMENT OF TRANSPORTATION

QUALIFICATIONS AND DUTIES OF CONCRETE QUALITY CONTROL PERSONNEL

Effective: December 1, 1993
Revised: June 1, 2012

This document summarizes the qualifications and duties of quality control personnel for Portland Cement Concrete (PCC) mixtures, Cement Aggregate Mixture II (CAM II), and Controlled Low-Strength Material (CLSM). Duties shall be performed daily, or as required, according to the QC/QA specifications and related documents.

QUALITY CONTROL MANAGER: An individual who has the experience, responsibility, and authority to make decisions regarding quality control of Portland Cement Concrete, Cement Aggregate Mixture II, and Controlled Low-Strength Material. This individual is required to have successfully completed the Department's Portland Cement Concrete Level I Technician Course, the Portland Cement Concrete Level II Technician Course, and either the 3-day Mixture Aggregate Technician Course or 5-day Aggregate Technician Course.

Duties:

1. Understand the specifications and related documents regarding QC/QA. Read the Quality Control Plan and any amendments to the Plan.

2. Manage overall project quality control.

3. Ensure the laboratory, concrete plant, and delivery trucks are approved by the Engineer.

4. Ensure the test equipment is maintained and calibrated as required by the appropriate test procedure.

5. Ensure the mixture meets the requirements of the specifications.

6. Ensure good communication between the plant and jobsite to quickly resolve quality control problems. Failure to resolve quality control problems shall result in mixture production suspension.

7. Ensure the Engineer is notified of any material supply problems.

8. Ensure the Engineer is immediately notified of any failing tests and subsequent remedial action. Ensure passing tests are reported no later than the start of the next work day. Consult with the Engineer when questions arise concerning acceptance or rejection of materials.

9. Ensure all observations, inspections, adjustments to the mix design, test results, retest results, and corrective actions are documented promptly, and in the specified format. Ensure form MI 504M, form MI 654, and form MI 655 are submitted to the Engineer weekly, or as required by the Engineer.

10. Supervise the Level III PCC Technician, Level II PCC Technician, Level I PCC Technician, Concrete Tester, Gradation Technician, Mixture Aggregate Technician, and Aggregate Technician.

11. Ensure sufficient personnel are provided to perform the required inspections, sampling, testing, and documentation. Ensure work is accurate and done in a timely manner.

LEVEL III PCC TECHNICIAN: An individual who has successfully completed the Department's Portland Cement Concrete Level I Technician Course, the Portland Cement Concrete Level II Technician Course, the Portland Cement Concrete Level III Technician Course, and either the 3-day Mixture Aggregate Technician Course or 5-day Aggregate Technician Course.

Duties:

1. Understand the specifications and related documents regarding QC/QA. Read the Quality Control Plan and any amendments to the Plan.

2. Read contract special provision(s) for project specific mix design information.

3. Obtain component materials' specific gravities and absorptions (aggregates).

4. Ensure coarse aggregate voids tests are performed when necessary to calculate mix design batch weights (mass). NOTE: The Level III PCC Technician may train anyone to sample and test coarse aggregate voids, provided the individual is monitored on a daily basis by the Level III PCC Technician. This is not applicable to aggregate sampling and testing for gradation, or to any other type of test.

5. Determine the correct proportions of aggregates, cement, finely divided minerals, water, admixtures, and fiber reinforcement per cubic yard (meter).

6. Evaluate results when a trial mixture is performed.

7. Supervise a trial batch when requested by the Engineer.

8. Ensure the mix design is verified by the Engineer.

9. Ensure the mix design meets specification requirements during construction. If not, take appropriate action and re-submit to the Engineer.

LEVEL II PCC TECHNICIAN: An individual who has successfully completed the Department's Portland Cement Concrete Level I Technician Course, the Portland Cement Concrete Level II Technician Course, and either the 3-day Mixture Aggregate Technician Course or 5-day Aggregate Technician Course.

Duties:

1. See Level I PCC Technician duties.

2. Check the operation of the concrete plant and condition of the delivery trucks.

3. Ensure only materials approved by the Department are used.

4. Obtain and split aggregate samples.

5. Perform gradation test for coarse and fine aggregates. If test results are near specification limits or unsatisfactory, take appropriate action and retest when applicable.

6. Perform aggregate moisture tests to adjust mix design aggregate batch weights (mass). NOTE: The Level II PCC Technician may train anyone to sample and test aggregate for moisture, provided the individual is monitored on a daily basis by the Level II PCC Technician. This is not applicable to aggregate sampling and testing for gradation, or to any other type of test.

7. Verify the specified mix design is used, and the correct proportions of aggregates, cement, finely divided minerals, water, admixtures, and fiber reinforcement are batched.

8. Control water/cement ratio by determining the allowable quantity of water which can be added at the jobsite.

9. Maintain communications with jobsite personnel to control the mixture, for compliance with the specifications.

10. Supervise the Gradation Technician, or assign the task to the Mixture Aggregate Technician or Aggregate Technician.

LEVEL I PCC TECHNICIAN: An individual who has successfully completed the Department's Portland Cement Concrete Level I Technician Course.

Duties:

1. Understand the specifications and related documents regarding QC/QA. Read the Quality Control Plan and any amendments to the Plan.

2. Maintain and calibrate test equipment as required by the appropriate test procedure.

3. Sample the mixture.

4. Perform temperature, slump, slump flow (self-consolidating concrete (SCC)), flow (CLSM), J-Ring (SCC), L-Box (SCC), hardened visual stability index (SCC), measured stability index (SCC), dynamic segregation index (SCC), and air content tests and compare with specifications. If test results are unsatisfactory or near specification limits, take appropriate action and retest when applicable.

5. Perform unit weight test and determine yield.

6. Make strength and static segregation (SCC) specimens. Transport strength specimens properly and ensure correct curing. Break strength specimens. NOTE: If an individual has the responsibility of breaking strength specimens only, such as at a consultant's laboratory, this individual is required to have the Level I PCC Technician training or the Concrete Strength Testing Technician certification by the American Concrete Institute (ACI).

7. Monitor truck revolutions and haul time.

8. Determine the required quantity of water and admixtures for adjusting the mixture, to meet specifications and field conditions.

9. Observe the discharge of a mixture by the delivery truck, and take appropriate action if a problem is identified.

10. For a mixture which is not mixed on the jobsite, ensure the required information is recorded on the delivery truck ticket.

11. Document all observations, inspections, adjustments to the mix design, test results, retest results, and corrective actions promptly, and in the specified format.

12. Maintain communications with plant personnel to control the mixture, for compliance with the specifications.

13. Notify the Engineer of test results.

14. Report test results to the Quality Control Manager.

15. Supervise the Concrete Tester.

CONCRETE TESTER: An individual who has successfully completed the Department's Portland Cement Concrete Tester Course. The Concrete Tester shall be monitored on a daily basis by the Level I or the Level II PCC Technician when performing tests.

Duties:

1. Sample the mixture.

2. Perform temperature, slump, slump flow (self-consolidating concrete (SCC)), flow (CLSM), J-Ring (SCC), L-Box (SCC), hardened visual stability index (SCC), measured stability index (SCC), dynamic segregation index (SCC), air content and unit weight tests.

3. Make strength and static segregation (SCC) specimens.

4. Monitor truck revolutions and haul time.

5. Observe the mixture and notify the Level I or Level II PCC Technician of any problems.

6. Assist the Level I or Level II PCC Technician with adjustments to a mixture, by adding water or an admixture.

7. For a mixture which is not mixed on the jobsite, ensure the required information is recorded on the delivery ticket.

8. Document all observations, inspections, adjustments to the mix design, test results, retest results, and corrective actions promptly, and in the specified format.

9. Report truck revolutions, haul time, and test results to the Level I or Level II PCC Technician. Immediate notification is required if truck revolutions, haul time, or test results are near specification limits or unsatisfactory.

GRADATION TECHNICIAN: An individual who has successfully completed the Department's Aggregate Gradation Testing Course and has demonstrated satisfactory field performance. The Gradation Technician shall be monitored on a daily basis by the Level II PCC Technician when performing tests. The Level II PCC Technician may have the Mixture Aggregate Technician, or Aggregate Technician responsible for supervising the Gradation Technician on a daily basis.

Duties:

1. Split aggregate samples provided by others.
2. Perform gradation test for coarse and fine aggregates.
3. Document test results.
4. Report test results to Level II PCC Technician. Immediate notification is required if test results are near specification limits or unsatisfactory.

MIXTURE AGGREGATE TECHNICIAN: An individual who has successfully completed the Department's 3-day Aggregate Training Course.

Duties:

1. Obtain and split aggregate samples.
2. Perform gradation test for coarse and fine aggregates.
3. Document test results.
4. Report test results to Level II PCC Technician. Immediate notification is required if test results are near specification limits or unsatisfactory.
5. Supervise the Gradation Technician, when required by the Level II PCC Technician.

NOTE: The duties listed are for assisting the Level II PCC Technician, and are not to be confused with the “Aggregate Gradation Control System” program.

AGGREGATE TECHNICIAN: An individual who has successfully completed the Department's 5-day Aggregate Training Course.

Duties:

1. Obtain and split aggregate samples.
2. Perform gradation test for coarse and fine aggregates.
3. Document test results.
4. Report test results to Level II PCC Technician. Immediate notification is required if test results are near specification limits or unsatisfactory.
5. Supervise the Gradation Technician, when required by the Level II PCC Technician.

NOTE: The duties listed are for assisting the Level II PCC Technician, and are not to be confused with the “Aggregate Gradation Control System” program.

Appendix C

ILLINOIS DEPARTMENT OF TRANSPORTATION

REQUIRED SAMPLING AND TESTING EQUIPMENT FOR CONCRETE

Effective: December 1, 1993
Revised: June 1, 2012

This document applies to cast-in-place, precast, and precast prestressed operations. This document summarizes the minimum requirements for sampling and testing Portland Cement Concrete (PCC) mixtures, Cement Aggregate Mixture II (CAM II), and Controlled Low-Strength Material (CLSM). Refer to the *Manual of Test Procedures for Materials* for detailed equipment information.

AT THE PLANT OR LOCATION APPROVED BY THE ENGINEER:

Proportioning PCC, CAM II, CLSM

Aggregate Moisture Test Equipment, and Balance[1] or Scale[1]
([1] The weighing equipment does not have to be electronic. Check weights are recommended.)

Sampling Plastic PCC, CAM II, CLSM

Wheelbarrow or Similar Equipment

Shovel

Testing Plastic PCC, CAM II, CLSM

Slump Kit (PCC or CAM II)

Plastic Cylinder for Flow Test (CLSM)

Air Meter Kit and Calibration Equipment

Unit Weight Kit, Calibration Equipment, and Balance[1] or Scale[1]
([1] The weighing equipment does not have to be electronic. Check weights are recommended.)

Thermometer

Ruler

Hand Scoop or Trowel

Vibrator (if required)

Slump Flow Kit (Required only for self-consolidating concrete.)

J-Ring or L-Box Kit (Required only for self-consolidating concrete.)

Aggregate Sampling Equipment for High/Low Volume Operation

Template and brush, or sampling device, or shovel.

Aggregate Testing Equipment for High Volume Operation

Definition of High Volume Aggregate Testing Operation – The high volume aggregate testing equipment may be used for multiple concrete plants, if approved by the Engineer. The decision will be based on specification requirements for providing test results.

Electronic Balance[2]
([2] Check weights are recommended.)

Sieve Shaker, 305 mm (12 in.) sieve capacity and sufficient inside height to accept typical sieve stock

Sample Splitter, coarse aggregate, two pans[3]
([3] Three pans are required if the sample splitter does not have a hopper to hold aggregate.)

Sample Splitter, fine aggregate, two pans[3]
([3] Three pans are required if the sample splitter does not have a hopper to hold aggregate.)
(or)
Shovel, hand scoop, brush and dust pan,
Canvas blanket (optional), trowel (optional),
Sampling thief or small scoop or large spoon (optional)

Sieves, 305 mm (12 in.) brass with brass or stainless cloth

2 in. nominal height[4]—	25 mm (1 in.), 19 mm (3/4 in.), 16 mm (5/8 in.), 12.5 mm (1/2 in.)
1 5/8 in. nominal height[4]—	9.5 mm (3/8 in.), 6.25 mm (1/4 in.), 4.75 mm (No. 4), 1.18 mm (No. 16) two required, 0.3 mm (No. 50), 0.15 mm (No. 100), 0.075 mm (No. 200) two required

[4] Distance from the top of the frame to the sieve cloth surface

Two Pans

Lid

Electric Drying Oven 110 ± 5 °C (230 ± 9 °F)
(or)
Two Double Electric Hot Plates or Gas Burners

Sink, Faucet, and Water Supply

Four Drying Pans 330 x 230 x 50 mm (13 x 9 x 2 in.), typical

Four Holding Pans 305 mm (12 in.), minimum diameter

Accessories: Large spoon, soft bristle brass brush, paint brush or stencil brush, and putty knife or pointed dowel rod.

Aggregate Testing Equipment for Low Volume Operation

Definition of Low Volume Aggregate Testing Operation – The low volume aggregate testing equipment may be used only for a single concrete plant. If a reduced testing time is desired, the high volume aggregate testing equipment is recommended, since the low volume 200 mm (8 in.) sieves will normally require the coarse aggregate sample to be sieved in parts to prevent overloading.

Electronic Balance[2]
([2] Check weights are recommended.)

Sieve Shaker, 200 mm (8 in.) sieve capacity and sufficient inside height to accept typical sieve stock

Sample Splitter, coarse aggregate, two pans[3]
([3] Three pans are required if the sample splitter does not have a hopper to hold aggregate.)

Sample Splitter, fine aggregate, two pans[3]
([3] Three pans are required if the sample splitter does not have a hopper to hold aggregate.)
(or)
Shovel, hand scoop, brush and dust pan,
Canvas blanket (optional), trowel (optional),
Sampling thief or small scoop or large spoon (optional)

Sieves, 200 mm (8 in.) brass with brass or stainless cloth

2 in. nominal height[4]—	25 mm (1 in.), 19 mm (3/4 in.), 16 mm (5/8 in.), 12.5 mm (1/2 in.), 9.5 mm (3/8 in.), 6.25 mm (1/4 in.), 4.75 mm (No. 4)
1 in. nominal height[4]—	1.18 mm (No. 16) two required, 0.3 mm (No. 50) 0.15 mm (No. 100), 0.075 mm (No. 200) two required

[4] Distance from the top of the frame to the sieve cloth surface

Two Pans

Lid

Two Double Electric Hot Plates or Gas Burners

Sink, Faucet, and Water Supply

Two Drying Pans 330 x 230 x 50 mm (13 x 9 x 2 in.), typical

Three Holding Pans 305 mm (12 in.), minimum diameter

Accessories: Large spoon, soft bristle brass brush, paint brush or stencil brush, and putty knife or pointed dowel rod.

AT THE JOBSITE:

Sampling Plastic PCC, CAM II, CLSM

Wheelbarrow or Similar Equipment

Shovel

Testing Plastic PCC, CAM II, CLSM

Slump Kit (PCC or CAM II)

Plastic Cylinder for Flow Test (CLSM)

Air Meter Kit and Calibration Equipment

Thermometer

Ruler

Hand Scoop or Trowel

Vibrator (if required)

Slump Flow Kit (Required only for self-consolidating concrete.)

J-Ring or L-Box Kit (Required only for self-consolidating concrete.)

Making Strength Specimens (Cylinders or Beams)

Plastic Cylinder Molds, 152 x 305 mm (6 x 12 in.)

Plastic Cylinder Lids, 152 mm (6 in.), or other material per Illinois Modified AASHTO T 23
----------OR----------
Steel or Plastic Beam Molds (typical length)
152 x 152 x 457 mm (6 x 6 x 18 in.),
152 x 152 x 483 mm (6 x 6 x 19 in.),
152 x 152 x 508 mm (6 x 6 x 20 in.),
152 x 152 x 533 mm (6 x 6 x 21 in.), or
152 x 152 x 762 mm (6 x 6 x 30 in.)

Plastic Cover with Absorbent Pad, or other material per Illinois Modified AASHTO T 23
----------AND----------
Tamping Rod or Vibrator (as appropriate)

Mallet

Hand Scoop (optional)

Trowel or Wood Float

AT THE JOBSITE OR LOCATION APPROVED BY THE ENGINEER:

Curing Strength Specimens

Moist Cabinet or Moist Room, with Air Temperature and
Relative Humidity Control Equipment

Recording Thermometer

Relative Humidity Measuring Device and Logbook, or
Relative Humidity Recording Device
----------OR----------
Water Storage Tank and Provisions for Water Temperature Control

Maximum/Minimum Thermometer and Logbook, or
Recording Thermometer

Testing Strength Specimens

Capping System for Compressive Strength

Mechanical Testing Machine for Compressive Strength
----------OR----------
Mechanical or Hand-Operated Testing Machine for
Flexural Strength (Using Simple Beam with Center-Point Loading)

Self-Consolidating Concrete

Saw to cut cylinders for hardened visual stability index.

PRECAST CONCRETE PLANTS (ADDITIONAL REQUIREMENTS):

For dry cast operations, the slump kit is optional and the air meter kit is not required.

Block/Brick Products – A compression test machine is required.

Pipe Products – A three-edge-bearing machine is required.

Applicable Products – When cores are used to determine compressive strength, the core drill shall have diamond impregnated bits attached to the core barrel.

Applicable Products – Absorption, permeability, hydrostatic, density, freeze/thaw, linear drying shrinkage, and abrasion resistance test equipment are required.

This Page Reserved

Appendix D

Illinois Department of Transportation

Calibration of Concrete Test Equipment
Slump

Owner of Equipment: _____ Manufactured By: _____

Model No.: _____ Serial No.: _____ IDOT No.: _____

Inspection References: (check one) ☐ Illinois Modified AASHTO T 119 ☐ ASTM C 143

Frequency: a. Every 12 months, or
b. When there is a question of calibration.

	Calibrations[A]					
	# 1	# 2	# 3	# 4	# 5	# 6
Record date of inspection. (mm/dd/yy)						
Indicate date of next inspection. (mm/dd/yy)						
Are interior and exterior clean? (Y/N)						
Record cone thickness. (0.060 in. (1.5 mm) minimum; 0.045 in. (1.15 mm) minimum if formed by the Spinning Process)						
Record top diameter of cone. (4 ± 1/8 in. (102 ± 3.2 mm))						
Record bottom diameter of cone. (8 ± 1/8 in. (203 ± 3.2 mm))						
Record height of cone. (12 ± 1/8 in. (305 ± 3.2 mm))						
Are sides smooth and free of dents? (Y/N)						
Are foot pieces and handles in good condition? (Y/N)						
Do base plate clamps and swing handle move freely? (Y/N)						
Is tamping rod tip hemispherical? (Y/N)						
Record diameter of tamping rod and hemispherical tip. 5/8 ± 1/16 in. (16 ± 2 mm)						
Record tamping rod length. (Refer to test method for acceptable length, but 16 in. (400 mm) to 24 in. (600 mm) is typically acceptable.)						

Name of Inspector/Comments: (For BMPR*: Supervisor shall initial each calibration following completion.)	
# 1	
# 2	
# 3	
# 4	
# 5	
# 6	

*BMPR: IDOT Bureau of Materials and Physical Research

[A] A "No" answer or measured value outside of indicated tolerances requires the equipment to be repaired or replaced. For any discrepancy, the applicable inspection reference(s) checked above shall have precedence over this calibration form.

BMPR PCCQ01 (Rev. 09/17/12)

Illinois Department of Transportation

Calibration of Concrete Test Equipment
Air Meter, Type "A"

Owner of Equipment: _____ Manufactured By: _____

Model No.: _____ Serial No.: _____ IDOT No.: _____

Inspection References: (check one) ☐ Illinois Modified AASHTO T 152 ☐ ASTM C 231

Frequency:
a. Every 12 months according to Illinois Modified AASHTO T 152 (or every 3 months according to ASTM C 231, or
b. When there is an elevation change of more than 600 ft (183 m) from the location at which the test equipment is calibrated, or
c. When there is a question of calibration.

Calibration Equipment: INTERNAL CALIBRATION CYLINDER

	Calibrations[A]					
	# 1	# 2	# 3	# 4	# 5	# 6
Record date of inspection. (mm/dd/yy)						
Indicate date of next inspection. (mm/dd/yy)						
Are interior and exterior clean? (Y/N)						
Clamps, funnel assembly, & petcocks work properly? (Y/N)						
Are gasket and gauge in good condition? (Y/N)						
Record bowl height.						
Record bowl diameter. (0.75 to 1.25 times the height?)						
Record the Expansion Factor.[B]						
Indicate volume (%) of calibration cylinder.[C]						
Record Calibration Point Reading (%).[C]						
Is the air meter accurate?[C] (Y/N)						
Is tamping rod tip hemispherical? (Y/N)						
Record diameter of tamping rod and hemispherical tip. (5/8 ± 1/16 in. (16 ± 2mm))						
Record tamping rod length. (Refer to test method for acceptable length, but 16 in. (400 mm) to 24 in. (600 mm) is typically acceptable.)						
Record mallet weight (mass). (1.25 ± 0.50 lb (0.57 ± 0.23 kg))						
Indicate rubber or rawhide mallet head.						

Name of Inspector/Comments[B]: (For BMPR*: Supervisor shall initial each calibration following completion.)	
# 1	
# 2	
# 3	
# 4	
# 5	
# 6	

*BMPR: IDOT Bureau of Materials and Physical Research

[A] A "No" answer or measured value outside of indicated tolerances requires the equipment to be repaired or replaced. For any discrepancy, the applicable inspection reference(s) checked above shall have precedence over this calibration form.

[B] Record calculation of expansion factor in the Comments section.

[C] For Illinois Modified AASHTO T 152, refer to the Appendix of the Portland Cement Concrete Level I Technician Course manual for additional information on "Air Meter Adjustment Instructions."

BMPR PCCQ02 (Rev. 09/17/12)

Illinois Department of Transportation

Calibration of Concrete Test Equipment
Air Meter, Type "B"

Owner of Equipment: _____ Manufactured By: _____

Model No.: _____ Serial No.: _____ IDOT No.: _____

Inspection References: (check one) ☐ Illinois Modified AASHTO T 152 ☐ ASTM C 231

Frequency: a. Every 3 months during use, or
b. When there is a question of calibration.

Calibration Equipment: ☐ A = TUBES AND CALIBRATION VESSEL
☐ B = INTERNAL CALIBRATION CYLINDER

	Calibrations[A]					
	# 1	# 2	# 3	# 4	# 5	# 6
Record date of inspection. (mm/dd/yy)						
Indicate date of next inspection. (mm/dd/yy)						
Indicate Type of Calibration Equipment. (A or B)						
Are interior and exterior clean? (Y/N)						
Clamps, funnel assembly, & petcocks work properly? (Y/N)						
Are gasket and gauge in good condition? (Y/N)						
Record bowl height.						
Record bowl diameter. (0.75 to 1.25 times the height?)						
A: Indicate volume (%) of calibration vessel.[B]						
A: Record Calibration Point Reading (%) at 0, 5, & 10.[B] 0						
5						
10						
B: Indicate volume (%) of calibration cylinder.[B]						
B: Record Calibration Point Reading (%).[B]						
Is the air meter accurate?[B] (Y/N)						
Is tamping rod tip hemispherical? (Y/N)						
Record diameter of tamping rod and hemispherical tip. (5/8 ± 1/16 in. (16 ± 2 mm))						
Record tamping rod length. (Refer to test method for acceptable length, but 16 in. (400 mm) to 24 in. (600 mm) is typically acceptable.)						
Record strike-off bar length. (≥ 12 in. (300 mm))						
Record strike-off bar width. (≥ 3/4 in. (20 mm))						
Record strike-off bar thickness. (≥ 1/8 in. (3 mm))						
Record mallet weight (mass). (1.25 ± 0.50 lb (0.57 ± 0.23 kg))						
Indicate rubber or rawhide mallet head.						

Name of Inspector/Comments: (For BMPR*: Supervisor shall initial each calibration following completion.)

# 1	
# 2	
# 3	
# 4	
# 5	
# 6	

*BMPR: IDOT Bureau of Materials and Physical Research

[A] A "No" answer or measured value outside of indicated tolerances requires the equipment to be repaired or replaced. For any discrepancy, the applicable inspection reference(s) checked above shall have precedence over this calibration form.

[B] For Illinois Modified AASHTO T 152, refer to the Appendix of the Portland Cement Concrete Level I Technician Course manual for additional information on "Air Meter Adjustment Instructions."

BMPR PCCQ03 (Rev. 09/17/12)

Illinois Department of Transportation

Calibration of Concrete Test Equipment
Air Meter, Volumetric

Owner of Equipment: _____ Manufactured By: _____

Model No.: _____ Serial No.: _____ IDOT No.: _____

Inspection References: (check one) ☐ Illinois Modified AASHTO T 196 ☐ ASTM C 173

Frequency: a. Every 12 months, or
b. When there is a question of calibration.

	Calibrations[A]					
	# 1	# 2	# 3	# 4	# 5	# 6
Record date of inspection. (mm/dd/yy)						
Indicate date of next inspection. (mm/dd/yy)						
Are interior and exterior clean? (Y/N)						
Do clamps and screw cap work properly? (Y/N)						
Are gasket and transparent scale in good condition? (Y/N)						
Record bowl height.						
Record bowl diameter. (1.00 to 1.25 times the height?)						
Does funnel spout extend to a point just above the top section's bottom? (Y/N)						
Is calibrated cup total capacity or graduated increments equal to 1.00 ± 0.04% of the volume of the bowl? (Y/N)						
Is the rubber bulb syringe capacity at least 2 oz. (50 mL)? (Y/N)						
Is the alcohol 70 % by volume isopropyl alcohol? (Y/N)						
Is tamping rod tip hemispherical? (Y/N)						
Record diameter of tamping rod and hemispherical tip. (5/8 ± 1/16 in. (16 ± 2 mm))						
Record tamping rod length. (Refer to test method for acceptable length, but 16 in. (400 mm) to 24 in. (600 mm) is typically acceptable.)						
Record strike-off bar length.[B] (≥ 12 in. (300 mm))						
Record strike-off bar width.[B] (≥ 3/4 in. (20 mm))						
Record strike-off bar thickness.[B] (≥ 1/8 in. (3 mm))						
Record mallet weight (mass). (1.25 ± 0.50 lb (0.57 ± 0.23 kg))						
Indicate rubber or rawhide mallet head.						

Name of Inspector/Comments: (For BMPR*: Supervisor shall initial each calibration following completion.)	
# 1	
# 2	
# 3	
# 4	
# 5	
# 6	

*BMPR: IDOT Bureau of Materials and Physical Research

[A] A "No" answer or measured value outside of indicated tolerances requires the equipment to be repaired or replaced. For any discrepancy, the applicable inspection reference(s) indicated above shall have precedence over this calibration form.

[B] Refer to Illinois Modified AASHTO T 196 or ASTM C 173 to obtain required dimensions for high density polyethylene or other plastic strike-off bars.

BMPR PCCQ04 (Rev. 09/17/12)

Illinois Department of Transportation

Calibration of Concrete Test Equipment Unit Weight

Owner of Equipment: _____ Manufactured By: _____

Model No.: _____ Serial No.: _____ IDOT No.: _____

Inspection References: (check one) ☐ Illinois Modified AASHTO T 121 and Illinois Test Procedure 19 ☐ ASTM C 138 and ASTM C 24

Frequency: a. Every 12 months, or
b. When there is a question of calibration.

	Calibrations[A]					
	# 1	# 2	# 3	# 4	# 5	# 6
Record date of inspection. (mm/dd/yy)						
Indicate date of next inspection. (mm/dd/yy)						
Are interior and exterior clean? (Y/N)						
Balance/scale conforms to Illinois Specification 101? (Y/N)						
Record the measure diameter.						
Record the measure height. (0.80 to 1.50 times the diameter? [B])						
Record thickness of bottom, wall, and remainder. (Refer to Illinois Test Procedure 19 or ASTM C 29) — bottom						
upper wall						
wall remainder						
Is measure's top rim smooth and plane? (Y/N) (within 0.01 in. (0.25 mm))						
Record strike-off plate's thickness. (metal: ≥ 1/4 in. (6 mm); glass/acrylic: ≥ 1/2 in. (13 mm))						
Are strike-off plate edges straight/smooth? (Y/N) (within 1/16 in. (1.6 mm))						
Strike-off plate ≥ 2 in. (50 mm) larger than diameter of measure? (Y/N)						
Record calibration plate thickness. (1/4 in. (6 mm))						
Record calibration plate length/width. (≥ 1 in. (25 mm) larger than measure's diameter)						
Calculate and record calibration volume. (Refer to Illinois Test Procedure 19 or ASTM C 29)						
Record temperature of water used in calibration.						
Record diameter of tamping rod and hemispherical tip. (5/8 ± 1/16 in. (16 ± 2 mm))						
Record tamping rod length. (Refer to test method for acceptable length, but 16 in. (400 mm) to 24 in. (600 mm) is typically acceptable.)						
Record mallet weight (mass). (1.25 ± 0.50 lb (0.57 ± 0.23 kg) for measures ≤ 0.5 ft^3 (0.014 m^3); 2.25 ± 0.50 lb (1.020 ± 0.23 kg) for larger measures)						
Indicate rubber or rawhide mallet head.						

Name of Inspector/Comments: (For BMPR*: Supervisor shall initial each calibration following completion.)	
# 1	
# 2	
# 3	
# 4	

*BMPR: IDOT Bureau of Materials and Physical Research

[A] A "No" answer or measured value outside of indicated tolerances requires the equipment to be repaired or replaced. For any discrepancy, the applicable inspection reference(s) checked above shall have precedence over this calibration form.

[B] The measure's height:diameter ratio requirement is not applicable for an air meter bowl used as a unit weight measure, which should have a diameter 0.75 to 1.25 times the height.

BMPR PCCQ05 (Rev. 09/17/12)

Illinois Department of Transportation

Calibration of Concrete Test Equipment
Cylinder Molds, Plastic or Metal

Note: Metal cylinder molds may be used for only precast concrete or precast prestressed concrete products when approved by the Engineer.

Owner of Equipment: _____ Manufactured By: _____

Model No.: _____ Serial No.: N/A IDOT No.: N/A

Inspection References:(check one) ☐ Illinois Modified AASHTO T 23 and IL Mod. M 205 ☐ ASTM C 31 and ASTM C 470[A]

Frequency: a. Minimum 3 randomly chosen molds per shipment, or
b. When there is a question of calibration.

	Calibrations[B]					
	# 1	# 2	# 3	# 4	# 5	# 6
Record date of inspection. (mm/dd/yy)						
Indicate date of next inspection. (mm/dd/yy)						
Are interior and exterior clean? (Y/N)						
Record inside diameter. (6 ± 1/16 in. (152 ± 1.6 mm))						
Record height. (12 ± 1/4 in. (305 ± 6 mm))						
Record wall thickness.						
Is mold watertight? [C] (Y/N)						
Are top and bottom perpendicular to the vertical axis? [C] (within 1/8 in. in 12 in. (3 mm in 300 mm))						
Is bottom inside surface plane? [C] (within 1/16 in. in 6 in. (1.6 mm in 152 mm))						
Is bottom flush with sidewall bottom? [C] (within 1/16 in. (1.6 mm))						
Is sidewall bottom fillet within 1/8 in. (3 mm) vertical and 3/16 in. (5 mm) horizontal? [C] (Y/N)						
Is tamping rod tip hemispherical? (Y/N)						
Record diameter of tamping rod and hemispherical tip. (5/8 in. (16 mm) is specified)						
Record tamping rod length. (≥23 in. (584 mm); 20 ± 4 in. (500 ± 100 mm)[A])						
Record mallet weight (mass). (1.25 ± 0.50 lb (0.57 ± 0.23 kg))						
Indicate rubber or rawhide mallet head.						
Is the cover for curing in good condition? (Y/N)						

Name of Inspector/Comments: (For BMPR*: Supervisor shall initial each calibration following completion.)	
# 1	
# 2	
# 3	
# 4	
# 5	
# 6	

*BMPR: IDOT Bureau of Materials and Physical Research

[A] Only applies to laboratories inspected by the Cement and Concrete Reference Laboratory (CCRL).

[B] A "No" answer or measured value outside of indicated tolerances requires the equipment to be repaired or replaced. For a shipment of molds, if one or more of the three random samples is unacceptable, return the shipment or check all molds. For any discrepancy, the applicable inspection reference(s) checked above shall have precedence over this calibration form.

[C] Refer to Illinois Modified AASHTO M 205 or ASTM C 470 according to the reference checked above.

BMPR PCCQ06 (06/03/09)

Illinois Department of Transportation

Calibration of Concrete Test Equipment
Beam Molds, Steel

Owner of Equipment: _____ Manufactured By: _____

Model No.: _____ Serial No.: _____ IDOT No.: _____

Inspection References: (check one) ☐ Illinois Modified AASHTO T 23 and IL Mod. M 205 ☐ ASTM C 31 and ASTM C 470 [A]

Frequency: a. Every 12 months, or
b. When there is a question of calibration.

	Calibrations[B]					
	# 1	# 2	# 3	# 4	# 5	# 6
Record date of inspection. (mm/dd/yy)						
Indicate date of next inspection. (mm/dd/yy)						
Are interior and exterior clean? (Y/N)						
Record width. (6 ± 1/4 in. (152 ± 6 mm))						
Record height. (6 ± 1/4 in. (152 ± 6 mm))						
Record length. (≥ 18 3/4 in. (476 mm) for one break; ≥ 29 3/4 in. (756 mm) for two breaks)						
Are inside mold surfaces smooth? (Y/N)						
Are mold sides, bottom, and ends perpendicular, straight and true, and free of warpage? (Y/N)						
Is the mold watertight?[C] (Y/N)						
Is tamping rod tip hemispherical? (Y/N)						
Record diameter of tamping rod and hemispherical tip. (5/8 in. (16 mm) is specified)						
Record tamping rod length. (≥23 in. (584 mm); 20 ± 4 in. (500 ± 100 mm)[A])						
Record mallet weight (mass). (1.25 ± 0.50 lb (0.57 ± 0.23 kg))						
Indicate rubber or rawhide mallet head.						
Is the cover for curing in good condition? (Y/N)						

Name of Inspector/Comments: (For BMPR*: Supervisor shall initial each calibration following completion.)	
# 1	
# 2	
# 3	
# 4	
# 5	
# 6	

*BMPR: IDOT Bureau of Materials and Physical Research

[A] Only applies to laboratories inspected by the Cement and Concrete Reference Laboratory (CCRL).

[B] A "No" answer or measured value outside of indicated tolerances requires the equipment to be repaired or replaced. For any discrepancy, the applicable inspection reference(s) checked above shall have precedence over this calibration form.

[C] Refer to Illinois Modified AASHTO M 205 or ASTM C 470 according to the reference checked above.

BMPR PCCQ07 (06/03/09)

Illinois Department of Transportation

Calibration of Concrete Test Equipment
Metal Retainers & Neoprene Pads

Owner of Equipment: _____ Manufactured By: _____

Model No.: _____ Serial No.: _____ IDOT No.: _____

Inspection References: Illinois Modified AASHTO T 22 and ASTM C 1231

Frequency: a. Every 3 months during use, or
b. When there is a question of calibration.

Note: A visual inspection shall be performed prior to first use each day, but does not need to be recorded.

	Calibrations[A]					
	# 1	# 2	# 3	# 4	# 5	# 6
Record date of inspection. (mm/dd/yy)						
METAL RETAINER						
Record inner wall height. (1.0 ± 0.1 in. (25 ± 3 mm))						
Record inside diameter. (102 – 107% of cylinder diameter)						
Are bearing surfaces plane? (Y/N) (within 0.002 in. (0.05 mm))						
Is bearing surface free of gouges, grooves, or indentations greater than 0.010 in. (0.25 mm) deep? (Y/N)						
Is bearing surface free of gouges, grooves, or indentations greater than 0.05 in.^{2} (32 mm^2) in surface area? (Y/N)						
Free of rust and other foreign material? (Y/N)						
NEOPRENE PADS						
Record Shore "A" Durometer hardness. (typically 70, tolerance ±5. See Table 1, ASTM C 1231)						
Record diameter. (not more than 1/16 in. (2 mm) smaller than inside diameter of retaining ring)						
Record thickness. (1/2 ± 1/16 in. (13 ± 2 mm))						
Free of excessive wear; damage (e.g., compression set); cracks or splits >3/8 in. (10 mm) in length regardless of depth? (Y/N)						
Is number of uses no more than 100? (Y/N)						

Name of Inspector/Comments: (For BMPR*: Supervisor shall initial each calibration following completion.)	
# 1	
# 2	
# 3	
# 4	
# 5	
# 6	

*BMPR: IDOT Bureau of Materials and Physical Research

[A] A "No" answer or measured value outside of indicated tolerances requires the equipment to be repaired or replaced. For any discrepancy, the applicable inspection reference(s) indicated above shall have precedence over this calibration form.

BMPR PCCQ08 (Rev. 07/28/09)

Illinois Department of Transportation

Calibration of Concrete Test Equipment
Capping Cylindrical Strength Specimens

Owner of Equipment: _____ Manufactured By: _____

Model No.: _____ Serial No.: _____ IDOT No.: _____

Inspection References: (check one) ☐ Illinois Modified AASHTO T 231 ☐ ASTM C 617[A]

Frequency: a. Every 3 months during use, or
b. When there is a question of calibration.

	Calibrations[B]					
	# 1	# 2	# 3	# 4	# 5	# 6
Record date of inspection. (mm/dd/yy)						
Indicate date of next inspection. (mm/dd/yy)						
Record capping plate thickness. (glass ≥ 1/4 in. (6 mm); metal ≥ 0.45 in. (11 mm); granite ≥ 3 in. (75 mm))						
Record capping plate side dimension. (≥ 1 in. (25 mm) larger than specimen's diameter)						
Is metal capping plate surface plane? (within 0.002 in. in 6 in. (0.05 mm in 150 mm))						
Is metal capping plate surface free of gouges, grooves, and indentations > 0.010 in. (25 mm) deep? (Y/N)						
Is metal capping plate surface free of gouges, grooves, and indentations > 0.05 in.^{2} (32 mm^2) in area? (Y/N)						
If recess, record metal plate thickness beneath recess. (≥ 1/2 in. (13 mm))						
If recess, record depth of metal plate recess. (≤ 1/2 in. (13 mm))						
Does alignment device ensure that no single cap will depart from perpendicularity of cylindrical specimen by more than 1/8 in. in 12 in. (3.2 mm in 305 mm)? (Y/N)						
Can the sulfur mortar be heated between 265° to 290°F (129° to 143° C)? (Y/N)						
Is capping material strength adequate for cylinder strength?[C] (Y/N)						

Name of Inspector/Comments: (For BMPR*: Supervisor shall initial each calibration following completion.)	
# 1	
# 2	
# 3	
# 4	
# 5	
# 6	

*BMPR: IDOT Bureau of Materials and Physical Research

[A] Only applies to laboratories inspected by the Cement and Concrete Reference Laboratory (CCRL).

[B] A "No" answer or measured value outside of indicated tolerances requires the equipment to be repaired or replaced. For any discrepancy, the applicable inspection reference(s) indicated above shall have precedence over this calibration form.

[C] Refer to Illinois Modified AASHTO T 231 or ASTM C 617 according to the reference checked above.

BMPR PCCQ09 (06/03/09)

This Page Reserved

Appendix E

AIR METER ADJUSTMENT INSTRUCTIONS TYPE "B" (VERTICAL AIR CHAMBER) ACCORDING TO ILLINOIS MODIFIED AASHTO T 152 USING TUBES AND CALIBRATION VESSEL

NOTE: Do not use these instructions if manufacturer instructions are available.

Use distilled water, boiled water, or tap water that has been allowed to stand for 24 hours or more. The water must be at room temperature.

Calibration of the Vessel (w)

1. Weigh the empty calibration vessel.
2. Fill the vessel with water at room temperature. Weigh on a balance or scale with a minimum readability of 0.1 gram.
3. Repeat Step 2 two more times and average the three results.
4. Subtract the mass (weight) in Step 1 from the average result in Step 3, to obtain the mass (weight) of the water (**w**).

Calibration of the Air Meter Bowl (W)

5. Weigh the empty bowl and glass plate. Use a glass plate which is a minimum 0.25 in. (6 mm) thick, and 1 in. (25 mm) wider than the diameter of the air meter bowl.
6. Fill the bowl with water at room temperature, using the glass plate to insure that the bowl is level, full of water, and has no air bubbles. Wipe off excess water from the outside of the bowl and glass plate.
7. Weigh the filled bowl and glass plate. Use a balance or scale with a minimum readability of 0.1 lb. (0.05 kg).
8. Repeat Steps 6 and 7 two more times and average the three results.
9. Subtract the mass (weight) of Step 5 from the average result in Step 8, to obtain the mass (weight) of water (**W**).

Effective Volume of the Calibration Vessel

10. Calculate the effective volume of the calibration vessel, **V**, as follows:

$$\mathbf{V} \text{ (nearest 0.1 percent)} = (\mathbf{w} \div \mathbf{W}) \times 100$$

Calibration Test to Check Initial Pressure of Air Meter

11. Screw the short straight section of tubing to the underside of the cover assembly (note which petcock).

12. Fill air meter bowl with water.

13. Clamp the moistened cover assembly to the bowl.

14. Tip the bowl slightly to one side and inject water into the lower petcock (which has the tube screwed into its underside) until water is expelled through the opposite petcock. Leave both petcocks open.

15. Pump up the air pressure to a little beyond the pre-determined initial pressure line. Wait a few seconds for the compressed air to cool to normal temperature. While tapping the gauge lightly, stabilize the gauge hand at the proper initial pressure line by pumping or bleeding off air as needed.

16. Close both petcocks, then press down on the needle valve lever.

17. Lightly tap the pressure gauge while keeping the needle valve lever pressed down.

18. Wait a few seconds until the hand stabilizes. If the correct initial pressure was selected, the gauge should read ± 0.1% at 0.0%.

19. If two or more tests exceed the ± 0.1% at 0.0%, select a new initial pressure line.

    ALTERNATIVE METHOD TO SET INITIAL PRESSURE LINE

    If two or more tests exceed the ± 0.1% at 0.0%, remove the glass face cover and reset the gauge needle by turning the recalibration screw on the gauge needle (dial face on older models) until the needle reads exactly 0.0%.

20. Open both petcocks to release pressure, and repeat Steps 14 through 18 to verify the gauge reads ± 0.1% at 0.0%.

Calibration Test to Check Accuracy of Air Meter

21. Attach the curved section of tubing to the top of the petcock which has the short straight section of tubing attached on the underside.

22. Open the petcock with the curved tube, press the needle valve lever, and fill the calibration vessel.

23. Close the petcock immediately when the vessel is full.

24. Open the opposite petcock. Then open the petcock with the curved section of tubing. This will allow the water in the curved tube to drain back into the bowl.

25. Repeat Steps 15, 16, and 17.

26. Wait a few seconds until the hand stabilizes. If the correct initial pressure was selected, the gauge should read ± 0.1% of the effective volume of the calibration vessel. For example, if the effective volume is 5.0%, the gauge should read between 4.9% and 5.1%. If not, use the ALTERNATIVE METHOD TO SET INITIAL PRESSURE LINE to correct the problem.

27. Continue the calibration process by filling the calibration vessel again. This is accomplished by repeating Steps 22 through 25.

28. Wait a few seconds until the hand stabilizes. The gauge should read ± 0.1% of the calculated value. For example, if the calculated value is 10.0%, the gauge should read between 9.9% and 10.1%. If not, use the ALTERNATIVE METHOD TO SET INITIAL PRESSURE LINE to correct the problem. Note: The calculated value is determined by doubling the effective volume of the calibration vessel.

AIR METER ADJUSTMENT INSTRUCTIONS TYPE "B" (LOW PROFILE AIR CHAMBER) USING TUBE AND CALIBRATION VESSEL

Obtain And Follow Instructions Of The Manufacturer.

AIR METER ADJUSTMENT INSTRUCTIONS
TYPE "A"
ACCORDING TO ILLINOIS METHOD
USING INTERNAL CALIBRATION CYLINDER

NOTE: Do not use these instructions if manufacturer instructions are available. In addition, these instructions are based on a minimum 6% internal calibration cylinder, and a Type "A" air meter typically owned by the Department.

Use distilled water, boiled water, or tap water that has been allowed to stand for 24 hours or more. The water must be at room temperature.

Calibration of the Cylinder (w)

1. Weigh the empty calibration vessel.

2. Fill the cylinder with water at room temperature. Weigh on a balance or scale with a minimum readability of 0.1 gram.

3. Repeat Step 2 two more times and average the three results.

4. Subtract the weight (mass) in Step 1 from the average result in Step 3, to obtain the weight (mass) of the water (**w**).

   NOTE: Between uses, the calibration vessel must be dry on the outside and inside. The vessel may be dried internally by placing it upside down (opening upwards) in a low temperature oven overnight; or by introducing a small quantity, approximately 0.5-1.0 oz. (10-25 ml), of methyl alcohol, ethyl alcohol, isopropyl alcohol, or acetone (all of these are very FLAMMABLE) into the vessel. Shake the vessel with the drying fluid in it. This is to ensure total contact of the fluid with the interior surfaces. Pour and shake out as much of the drying fluid as possible. The vessel should be placed upside down (opening upwards) to allow the drying fluid to evaporate. A stream of dry air may be directed through the opening to speed drying. When the calibration vessel is dry, its weight will match its original dry weight.

Calibration of the Air Meter Bowl (W)

5. Weigh the empty bowl and glass plate. Use a glass plate which is a minimum 0.25 in. (6 mm) thick, and 1 in. (25 mm) wider than the diameter of the air meter bowl.

6. Fill the bowl with water at room temperature, using the glass plate to insure that the bowl is level, full of water, and has no air bubbles. Wipe off excess water from the outside of the bowl and glass plate.

7. Weigh the filled bowl and glass plate. Use a balance or scale with a minimum readability of 0.1 lb. (0.05 kg).

8. Repeat Steps 6 and 7 two more times and average the three results.

9. Subtract the weight (mass) of Step 5 from the average result in Step 8, to obtain the weight (mass) of water (**W**).

Effective Volume of the Calibration Cylinder

10. Calculate the effective volume of the calibration cylinder, **V**, as follows:

$$\mathbf{V} \text{ (nearest 0.1 percent)} = 0.98(\mathbf{w} \div \mathbf{W}) \times 100$$

Calibration Test to Check Accuracy of Air Meter

11. Place a dry calibration cylinder, with its opening face down, in the center of the air meter bowl.

12. Moisten the cover assembly and clamp to the bowl.

13. Close the lower petcock. Open the upper petcock and the funnel valve. Add water, which is at room temperature, through the funnel until the level is slightly above the index mark, or until water flows from the upper petcock.

14. Close the funnel valve. Using the lower petcock, adjust the water level to the index mark. The index mark is above the zero mark. Always read the water level at the bottom of the meniscus. Close the lower petcock.

15. Close the upper petcock.

16. Using the hand pump, apply 15 psi (103 kPa) pressure.

17. Tap the cover assembly and sides of the bowl to remove any entrapped air adhering to the inner surface of the air meter.

18. Slowly (to avoid loss of air from the calibration cylinder) release the pressure by opening the upper petcock.

19. If the water level does not return to the index mark, this is an indication of an air or water leak. Determine and fix the leak. When checking for the leak, make sure the clamps were tight, and inspect all fittings. If there is no leak, then make sure the calibration cylinder has not tipped over.

20. If the water level returns to the index mark, apply 15 psi (103 kPa) pressure again. The scale should read ± 0.1% of the effective volume of the calibration cylinder. For example, if the effective volume is 6.5%, the scale should read between 6.4% and 6.6%. If not, the air meter will require service. For Type “A” air meters used by Department personnel, the Concrete Subunit in the Bureau of Materials and Physical Research will perform the required service.

Appendix F

ILLINOIS DEPARTMENT OF TRANSPORTATION

METHOD FOR OBTAINING RANDOM SAMPLES FOR CONCRETE

Effective: December 1, 1993
Revised: May 1, 2007

- **Point of Random Sampling and Testing Based on Production**

Applicable Specification(s):

Special Provision for Quality Control/Quality Assurance of Concrete Mixtures

A random sample based on mixture production is to be determined according to the following procedure:

a) Determine the total quantity to be placed.

b) Divide the total quantity by the random sample testing frequency. Round up to the nearest whole number.

i.e. Total quantity of bridge substructure is 395 yd³ (302 m³). The random sample testing frequency is 50 yd³ (40 m³) for slump and air.

302/40 = 7.6
Obtain 8 random samples.

c) Obtain a random number from a calculator, a computer, or the Department's random numbers table and multiply this number by the random sample testing frequency. Round the result to the nearest whole number and document the random number used.

*0.576 × 50 yd³ (40 m³) = 29 yd³ (23 m³)

* Random number is from the Department's random numbers table.

d) Determine which truck is to be sampled by maintaining a cumulative total of the amount placed during the pour.

		Cumulative Total
1st truck	6.5 yd³ (5.0 m³)	6.5 yd³ (5.0 m³)
2nd truck	6.5 yd³ (5.0 m³)	13.0 yd³ (10.0 m³)
3rd truck	6.5 yd³ (5.0 m³)	19.5 yd³ (15.0 m³)
4th truck	6.5 yd³ (5.0 m³)	26.0 yd³ (20.0 m³)
**5th truck	6.5 yd³ (5.0 m³)	32.5 yd³ (25.0 m³)

** Sample this truck since the random sample calculation is at 29 yd³ (23 m³). It is not necessary to sample exactly at 29 yd³ (23 m³). Therefore, the slump and air test may be performed upon arrival of the truck. Sampling is to be performed according to Illinois Modified AASHTO T 141.

e) Continue the random sampling method for the next 50 yd³ (40 m³).

i.e. Second sample random number = 0.892

Sample to be obtained at:

0.892 × 50 yd³ (40 m³) = 45 yd³ (36 m³) in the second 50 yd³ (40 m³).
Using the cumulative total you would sample at 95 yd³ (76 m³).

Third sample random number = 0.669

Sample to be obtained at:

0.669 × 50 yd³ (40 m³) = 33 yd³ (27 m³) in the third 50 yd³ (40 m³). Using the cumulative total you would sample at 133 yd³ (107 m³).

f) The last random sample shall be obtained by multiplying a random number by the fractional portion of the random sample testing frequency. Refer to the value of 7.6 which was determined under part b).

Obtain the last sample at:

0.609 × [0.6 × 50 yd³ (40 m³)] = 18 yd³ (15 m³) in the final 50 yd³ (40 m³). Using the cumulative total you would sample at 368 yd³ (295 m³).

- **<u>Point of Random Sampling and Testing Based on Location</u>**

Applicable Specification(s): (Note: Specifically for pull-off tests.)

Bridge Deck Microsilica Concrete Overlay
Bridge Deck Latex Concrete Overlay
Bridge Deck High-Reactivity Metakaolin (HRM) Concrete Overlay

A random sample based on a location within an area of pavement or bridge deck is to be determined according to the following procedure:

a) Obtain the length and width of the lot or sublot.

b) Obtain a random number from a calculator, a computer, or the Department's random numbers table, and multiply this number by the total length of the lot or sublot. Obtain another random number and multiply this number by the total width of the lot or sublot. For each result round to the nearest 0.1. Document the result and random number used.

For example, the lot or sublot is 500 ft (152 m) long and 12 ft (3.6 m) wide.

* 0.576 × 500 ft (152 m) = 288.0 ft (87.6 m)

* 0.892 × 12 ft (3.6 m) = 10.7 ft (3.2 m)

* Random number is from the Department's random numbers table.

Therefore, the random sample location shall be taken 288.0 ft (87.6 m) from the beginning of the lot or sublot, and 10.7 ft (3.2 m) from the designated right or left edge of the lot or sublot. The designated edge shall be determined by the Engineer, and shall not vary.

c) For each random sample location, determine the corresponding station location and document.

d) For each random sample location, the process shall be repeated for additional test locations using new random numbers for each location.

RANDOM NUMBERS

0.576	0.730	0.430	0.754	0.271	0.870	0.732	0.721	0.998	0.239
0.892	0.948	0.858	0.025	0.935	0.114	0.153	0.508	0.749	0.291
0.669	0.726	0.501	0.402	0.231	0.505	0.009	0.420	0.517	0.858
0.609	0.482	0.809	0.140	0.396	0.025	0.937	0.301	0.253	0.761
0.971	0.824	0.902	0.470	0.997	0.392	0.892	0.957	0.040	0.463
0.053	0.899	0.554	0.627	0.427	0.760	0.470	0.040	0.904	0.993
0.810	0.159	0.225	0.163	0.549	0.405	0.285	0.542	0.231	0.919
0.081	0.277	0.035	0.039	0.860	0.507	0.081	0.538	0.986	0.501
0.982	0.468	0.334	0.921	0.690	0.806	0.879	0.414	0.106	0.031
0.095	0.801	0.576	0.417	0.251	0.884	0.522	0.235	0.389	0.222
0.509	0.025	0.794	0.850	0.917	0.887	0.751	0.608	0.698	0.683
0.371	0.059	0.164	0.838	0.289	0.169	0.569	0.977	0.796	0.996
0.165	0.996	0.356	0.375	0.654	0.979	0.815	0.592	0.348	0.743
0.477	0.535	0.137	0.155	0.767	0.187	0.579	0.787	0.358	0.595
0.788	0.101	0.434	0.638	0.021	0.894	0.324	0.871	0.698	0.539
0.566	0.815	0.622	0.548	0.947	0.169	0.817	0.472	0.864	0.466
0.901	0.342	0.873	0.964	0.942	0.985	0.123	0.086	0.335	0.212
0.470	0.682	0.412	0.064	0.150	0.962	0.925	0.355	0.909	0.019
0.068	0.242	0.777	0.356	0.195	0.313	0.396	0.460	0.740	0.247
0.874	0.420	0.127	0.284	0.448	0.215	0.833	0.652	0.701	0.326
0.897	0.877	0.209	0.862	0.428	0.117	0.100	0.259	0.425	0.284
0.876	0.969	0.109	0.843	0.759	0.239	0.890	0.317	0.428	0.802
0.190	0.696	0.757	0.283	0.777	0.491	0.523	0.665	0.919	0.146
0.341	0.688	0.587	0.908	0.865	0.333	0.928	0.404	0.892	0.696
0.846	0.355	0.831	0.281	0.945	0.364	0.673	0.305	0.195	0.887
0.882	0.227	0.552	0.077	0.454	0.731	0.716	0.265	0.058	0.075
0.464	0.658	0.629	0.269	0.069	0.998	0.917	0.217	0.220	0.659
0.123	0.791	0.503	0.447	0.659	0.463	0.994	0.307	0.631	0.422
0.116	0.120	0.721	0.137	0.263	0.176	0.798	0.879	0.432	0.391
0.836	0.206	0.914	0.574	0.870	0.390	0.104	0.755	0.082	0.939
0.636	0.195	0.614	0.486	0.629	0.663	0.619	0.007	0.296	0.456
0.630	0.673	0.665	0.666	0.399	0.592	0.441	0.649	0.270	0.612
0.804	0.112	0.331	0.606	0.551	0.928	0.830	0.841	0.702	0.183
0.360	0.193	0.181	0.399	0.564	0.772	0.890	0.062	0.919	0.875
0.183	0.651	0.157	0.150	0.800	0.875	0.205	0.446	0.648	0.685

NOTE: Always select a new set of numbers in a systematic manner, either horizontally or vertically. Once used, the set should be crossed out.

This Page Reserved

Appendix G

Illinois Department of Transportation

Illinois Modified AASHTO T 141 Checklist
Sampling Fresh Concrete

The following is a summary checklist of the key steps involved in sampling freshly mixed concrete.

Did the tester:	**YES**	**NO**
1. Sample the concrete after discharge of at least 4 ft^3 (0.1 m^3) of concrete?	☐	☐
2. Repeatedly pass a receptacle through the entire discharge stream, or completely divert the discharge stream into a sampling container?	☐	☐
3. Remix the concrete with a damp shovel?	☐	☐
4. Obtain the sample within a 15 minute interval?	☐	☐
5. Start tests for slump and air within 5 minutes after the final portion of the sample was obtained?	☐	☐
6. Start molding cylinders or beams within 15 minutes after the sample was fabricated?	☐	☐
7. Protect the sample against contamination and rapid evaporation?	☐	☐

Tester: _____ Observer: _____ Date: _____

REMARKS: _____

Illinois Department of Transportation

Illinois Modified AASHTO T 309 Checklist

Temperature of Freshly Mixed Portland Cement Concrete

The following is a summary checklist of the key steps involved in measuring the temperature of freshly mixed concrete.

Did the tester:	**YES**	**NO**
1. Obtain a sample large enough to provide a minimum of 3 in. (75 mm) of concrete cover around the sensor in all directions?	☐	☐
2. Use an ASTM approved thermometer, accurate to ± 1° F (± 0.5° C) with an appropriate temperature range?	☐	☐
3. Place the thermometer in the sample with a minimum of 3 in. (75 mm) cover around the sensor?	☐	☐
4. Gently press the concrete around the thermometer?	☐	☐
5. Read the temperature after a minimum of 2 minutes or when the temperature readings stabilized?	☐	☐
6. Complete the temperature measurement within 5 minutes after obtaining the sample?	☐	☐
7. Record the temperature to the nearest ± 1° F (± 0.5° C)?	☐	☐

Tester: _____ Observer: _____ Date: _____

REMARKS: _____

Illinois Department of Transportation

Illinois Modified AASHTO T 119 Checklist
Slump of Portland Cement Concrete

The following is a summary checklist of the key steps involved in determining the slump of freshly mixed concrete.

Did the tester:	**YES**	**NO**
1. Dampen the funnel, the cone, the hand scoop or trowel, the tamping rod, and the floor or base plate?	☐	☐
2. Hold the cone firmly in place by standing on the two foot pieces, or by closing the clamps on the base plate?	☐	☐
3. Fill the cone in three approximately equal layers (by volume)?	☐	☐
4. Rod each layer throughout its depth 25 times, distributing the strokes uniformly over the cross section of each layer?	☐	☐
5. Rod the second and third layers to just penetrate into the underlying layer?	☐	☐
6. Keep excess concrete above the mold when rodding the top layer?	☐	☐
7. Strike off the concrete level with the top of the cone using the tamping rod?	☐	☐
8. Lift the cone upward in one smooth motion, without lateral movement or rotation, in 3 to 7 seconds?	☐	☐
9. Measure and record the slump to the nearest 1/4 in. (5 mm) from the top of cone to the displaced original center of the top surface of the concrete?	☐	☐
10. Perform the test from start to finish within 2 1/2 minutes?	☐	☐

Tester: _____ Observer: _____ Date: _____

REMARKS: _____

Illinois Department of Transportation

Illinois Modified AASHTO T 152 Checklist

Air Content of Freshly Mixed Concrete by the Pressure Method, Type A Meter

The following is a summary checklist of the key steps involved in determining the air content of freshly mixed concrete by the pressure method, using the Type A meter.

Did the tester:	**YES**	**NO**
1. Dampen the inside of the air meter bowl and top, the hand scoop or trowel, the tamping rod, and the strike-off bar?	☐	☐
2. Fill the bowl in three equal layers by volume, slightly overfilling the top layer?	☐	☐
3. Rod each layer 25 times with the hemispherical end of the tamping rod, uniformly distributing the strokes?	☐	☐
4. Rod the bottom layer throughout its depth, without forcefully striking the bottom of the bowl?	☐	☐
5. Rod the middle and top layers about 1 in. (25 mm) into the underlying layer?	☐	☐
6. Tap the sides of the bowl smartly 10-15 times with the mallet after rodding each layer?	☐	☐
7. Strike off the concrete level with the top of the bowl using the strike-off bar and clean off the rim?	☐	☐
8. Clean and moisten the inside of the cover before clamping it to the base?	☐	☐
9. Add water through the funnel valve until the level was slightly above the index mark, or until water flowed from the upper petcock?	☐	☐
10. Adjust the bottom of the meniscus (water level) to be level with the index mark?	☐	☐
11. Close the funnel valve and upper petcock and apply pressure using the hand pump?	☐	☐
12. Read the air content at 15 psi (103 kPa), or apply the proper multiplication factor (1.25 or 2.00) if the test was conducted at 10 or 5 psi (69 or 34 kPa), respectively?	☐	☐
13. Calculate and record the air content to the nearest tenth of a percent? Air Content = Gauge Reading - Aggregate Correction Factor	☐	☐

Tester: _____ Observer: _____ Date: _____

REMARKS: _____

Illinois Department of Transportation

Illinois Modified AASHTO T 152 Checklist

Air Content of Freshly Mixed Concrete by the Pressure Method, Type B Meter

The following is a summary checklist of the key steps involved in determining the air content of freshly mixed concrete by the pressure method, using the Type B meter.

Did the tester:	**YES**	**NO**
1. Dampen the inside of the air meter bowl and top, the hand scoop or trowel, the tamping rod, and the strike-off bar?	☐	☐
2. Fill the bowl in three equal layers by volume, slightly overfilling the top layer?	☐	☐
3. Rod each layer 25 times with the hemispherical end of the tamping rod, uniformly distributing the strokes?	☐	☐
4. Rod the bottom layer throughout its depth, without forcefully striking the bottom of the bowl?	☐	☐
5. Rod the middle and top layers about 1 in. (25 mm) into the underlying layer?	☐	☐
6. Tap the sides of the bowl smartly 10-15 times with the mallet after rodding each layer?	☐	☐
7. Strike off the concrete level with the top of the bowl using the strike-off bar and clean off the rim?	☐	☐
8. Clean and moisten the inside of the cover before clamping it to the base?	☐	☐
9. Open both petcocks?	☐	☐
10. Close the main air valve between the air chamber and the bowl?	☐	☐
11. Inject water through the petcock until it flowed out the other petcock?	☐	☐
12. Continue injecting water into the petcock while jarring the meter to insure all air was expelled?	☐	☐
13. Pump air until the gauge needle was on the initial pressure line?	☐	☐
14. Allow a few seconds for the compressed air to cool?	☐	☐
15. Adjust the gauge needle to the initial pressure line?	☐	☐
16. Close both petcocks?	☐	☐
17. Open the main air valve between the chamber and bowl?	☐	☐
18. Read the air percentage after lightly tapping the gauge to ensure the needle is not sticking?	☐	☐
19. Close the main air valve and then open the petcocks to release the air pressure before removing the cover?	☐	☐
20. Calculate and record the air content to the nearest tenth of a percent? Air Content = Gauge Reading - Aggregate Correction Factor	☐	☐

Tester: _____ Observer: _____ Date: _____

REMARKS: _____

Illinois Department of Transportation

Illinois Modified AASHTO T 23 Checklist

Making and Curing Concrete Test Specimens in the Field, Casting Cylinders

The following is a summary checklist of the key steps involved in making and curing test cylinder specimens.

Did the tester:	**YES**	**NO**
1. Place the molds on a flat, level, firm surface which was free of vibration or other disturbances?	☐	☐
2. Uniformly distribute the concrete in the mold?	☐	☐
3. Further distribute the concrete by using the tamping rod?	☐	☐
4. Fill the mold in three equal layers, slightly overfilling the top layer?	☐	☐
5. Rod each layer 25 times with the hemispherical end of the tamping rod, uniformly distributing the strokes?	☐	☐
6. Rod the bottom layer throughout its depth?	☐	☐
7. Rod the middle and top layers about 1 in. (25 mm) into the underlying layer?	☐	☐
8. Tap the sides of the mold lightly with the mallet or the open hand after rodding each layer?	☐	☐
9. Strike off the surface with a tamping rod, wood float, or trowel to produce a flat and even surface, using a minimum amount of manipulation?	☐	☐
10. Cover the specimens with a plastic cylinder lid or with a plastic sheet secured by a rubber band?	☐	☐
11. Identify the specimen by writing on the outside of the mold?	☐	☐
12. Place the specimens where they could remain undisturbed, and within the curing temperature range of 60° F to 80° F (16° C to 27° C)?	☐	☐

Tester: _____ Observer: _____ Date: _____

REMARKS: _____

_____

_____

_____

Illinois Department of Transportation

Illinois Modified AASHTO T 23 Checklist

Making and Curing Concrete Test Specimens in the Field, Casting Beams

The following is a summary checklist of the key steps involved in making and curing test beam specimens.

Did the tester:	**YES**	**NO**
1. Apply a light coating of form release to the inside of the mold?	☐	☐
2. Place the molds on a flat, level, firm surface which was free of vibration or other disturbances?	☐	☐
3. Uniformly distribute the concrete in the mold?	☐	☐
4. Further distribute the concrete by using a scoop or shovel?	☐	☐
5. Fill the mold in two equal layers, slightly overfilling the top layer?	☐	☐
6. Rod each layer 90 times for the 30 in. (762 mm) beam, or 60 times for the 20 in. (508 mm) beam, or 57 times for the 19 in. (483 mm) beam, using the hemispherical end of the tamping rod and uniformly distributing the strokes?	☐	☐
7. Rod the bottom layer throughout its depth?	☐	☐
8. Tap the outside of the mold 10-15 times with the mallet after rodding each layer?	☐	☐
9. Rod the top layer about 1/2 in. (15 mm) into the bottom layer?	☐	☐
10. Spade the sides and ends of the mold with a trowel or other tool after rodding each layer?	☐	☐
11. Strike off the surface with a wood float or trowel to produce a flat and even surface, using a minimum amount of manipulation?	☐	☐
12. Identify the specimen by writing on the outside of the mold, or by inserting a weatherproof tag at one end of the mold?	☐	☐
13. Cure the beam by covering with a plastic cover that has an absorbent pad, or with impervious plastic that has wet burlap on top?	☐	☐
14. Place the specimens where they could remain undisturbed, and within the curing temperature range of 60° F to 80° F (16° C to 27° C)?	☐	☐

Tester: _____ Observer: _____ Date: _____

REMARKS: _____

_____

_____

_____

BMPR PCCX02 (07/29/09)

Illinois Department of Transportation

Illinois Modified AASHTO T 121 Checklist
Unit Weight, Yield, and Air Content (Gravimetric) of Concrete

The following is a summary checklist of the key steps involved in determining the unit weight of freshly mixed

Did the tester:	**YES**	**NO**
1. Determine and record the weight (mass) of the empty container?	☐	☐
2. Dampen the container, the hand scoop or trowel, the tamping rod, and the strike-off plate?	☐	☐
3. Fill the container in three equal layers by volume, slightly overfilling the top layer?	☐	☐
4. Rod each layer 25 times for a 0.5 ft^3 (0.014 m^3) or smaller container?	☐	☐
5. Rod the bottom layer throughout its depth, without forcibly striking the bottom of the measure?	☐	☐
6. Rod the middle and top layers about 1 in. (25 mm) into the underlying layer?	☐	☐
7. Tap the sides of the container smartly 10-15 times with the mallet after rodding each layer?	☐	☐
8. Strike off the concrete level with the top of the container using the strike-off plate and clean off the rim?	☐	☐
9. Determine and record the total mass (weight) of the container and concrete?	☐	☐

Tester: _____ Observer: _____ Date: _____

REMARKS: _____

Appendix H

Introduction to Self-Consolidating Concrete

Self-consolidating concrete (SCC) is a flowable mixture capable of flowing around reinforcement and consolidating under its own weight without additional mechanical effort (vibration) and without segregation. Self-consolidating concrete may be used for Class BS, PC, PS, DS, and SI concrete. Admixtures for producing SCC shall be according to Article 1021.05 of the Standard Specifications; refer to the Department's Approved List of Concrete Admixtures for a list of self-consolidating concrete admixtures.

Though self-consolidating concrete is not a new technology (it was first used in Japan during the 1980s), it is relatively new in the United States, and the standards for testing it are still being developed. The Department has written several test methods based on current common practices. Appendix H-A collects these standard test methods (also found in the Manual of Test Procedures for Materials):

SCC-1, Sampling, Yield and Air Content, and Making Strength Test Specimens
This test method notes SCC specific modifications to existing standard AASHTO test methods. These modifications address how to prepare test specimens for air content, unit weight/yield, and strength tests, taking into consideration the material's self-consolidating properties.

SCC-2, Slump Flow and Stability
This test method covers the determination of flowability and stability of fresh SCC. The average diameter of the slump flow is a measure of the filling ability (flowability) of SCC. The Visual Stability Index (VSI) is a measure of the dynamic segregation resistance (stability) of SCC.

SCC-3, Passing Ability by J-Ring and Slump Cone
This test method covers the determination of the flowability and passing ability of fresh SCC using the J-Ring and Slump Cone. The diameter of the unobstructed slump flow versus the obstructed slump flow passing through the J-Ring is a measure of the passing ability of SCC.

SCC-4, Passing Ability by L-Box
This test method covers the determination of the flowability and passing ability of fresh SCC using the L-Box. The flow heights ratio is a measure of the passing ability of SCC. The flow times (optional) are a measure of the flowability of SCC.

SCC-6, Test Method for Static Segregation Using Hardened Concrete Cylinders
This test method covers the determination of the static segregation resistance (stability) of SCC. The visual assessment, using a Hardened Visual Stability Index (HVSI), of cast or cored hardened cylinders cut lengthwise in two is a measure of the stability of SCC.

Following the test methods, Appendix H-B has checklists for each test method. These checklists summarize the test method for inspection or refresher purposes.

Appendix H-C contains **SCC-10, Standard Test Method for Determining Formwork Pressure of Fresh Self-Consolidating Concrete Using Pressure Transducer Sensors.** This test method is required to be used when the form height for placing the self-consolidating concrete is greater than 10.0 ft (3.0 m).

This Page Reserved

Appendix H-A

Illinois Test Procedure SCC-1
Effective Date: May 1, 2007

Standard Test Method for Sampling, Determining Yield and Air Content, and Making and Curing Strength Test Specimens of Self-Consolidating Concrete

I. SAMPLING OF FRESHLY MIXED CONCRETE

Sampling freshly mixed self-consolidating concrete (SCC) shall be performed according to Illinois Modified AASHTO T 141, except the elapsed time for obtaining the representative sample shall not exceed two minutes. The number of testing personnel shall be such that all tests shall start within five minutes of obtaining the representative sample.

II. YIELD AND AIR CONTENT OF FRESHLY MIXED CONCRETE

The yield test shall be according to Illinois Modified AASHTO T 121, except the measure shall be filled in one lift without vibration, rodding, or tapping. The air content test shall be according to Illinois Modified AASHTO T 152 or T 196, except the bowl shall be filled in one lift without vibration, rodding, or tapping.

III. MAKING AND CURING CONCRETE STRENGTH TEST SPECIMENS

Strength test specimens shall be made according to Illinois Modified AASHTO T 23 or R 39, except for the following:

a. The specimen molds shall be filled using a suitable container in one lift without vibration, rodding, or tapping.

b. Strike off the surface of the concrete level with the top of the mold using the strike-off bar or tamping rod.

c. The slump flow, VSI, air content, and temperature of each batch of concrete, from which specimens are made, shall be measured immediately after remixing.

This Page Reserved

Illinois Test Procedure SCC-2
Effective Date: April 1, 2008

Standard Test Method for Slump Flow and Stability of Self-Consolidating Concrete

Referenced Test Procedure(s):

1. Illinois Test Procedure SCC-1, Sampling, Determining Yield and Air Content, and Making and Curing Strength Test Specimens of Self-Consolidating Concrete

2. AASHTO T 119 (Illinois Modified), Slump of Hydraulic-Cement Concrete

3. ASTM E 29 (Illinois Modified), Standard Practice for Using Significant Digits in Test Data to Determine Conformance with Specifications

To maintain brevity in the text, the following will apply:
Example: Illinois Test Procedure SCC-1 will be designated as "Illinois Test SCC-1."
AASHTO T 119 (Illinois Modified) will be designated as "T 119."
ASTM E 29 (Illinois Modified) will be designated as "ASTM E 29."

1. GENERAL

This test method covers the determination of flowability and stability of fresh self-consolidating concrete (SCC). The average diameter of the slump flow is a measure of the filling ability (flowability) of SCC. The Visual Stability Index (VSI) is a measure of the dynamic segregation resistance (stability) of SCC.

All rounding shall be according to ASTM E 29.

2. EQUIPMENT

a. Mold and Tamping Rod – The mold and tamping rod shall conform to that described in T 119.

b. Strike-Off Bar – *Optional.* The strike-off bar shall be a flat straight bar at least 3 mm (0.125 in.) x 20 mm (0.75 in.) x 300 mm (12 in.).

c. Base Plate – The base plate shall be of a smooth, rigid, and nonabsorbent poly methyl methacrylate (e.g. Plexiglas®, Lucite®, etc.) or high-density overlay (HDO) plywood material, and be of sufficient dimensions to accommodate the maximum slump flow. *Optional*: Centered on the testing surface of the base plate shall be a marked circle of diameter 500 mm (20 in.).

d. Suitable container for filling inverted slump cone.

e. Measuring Tape – The measuring tape shall have a minimum gradation of 10 mm (0.5 in.).

f. Stopwatch – *Optional.* The stopwatch shall have a minimum reading of 0.2 seconds.

3. MATERIALS

The sample of SCC from which test specimens are made shall be obtained according to Section I of Illinois Test SCC-1.

4. PROCEDURE

a. Dampen the slump cone and base plate. Ensure excess water is removed from the testing surface as too much water may influence the Visual Stability Index (VSI) rating.

b. Place the base plate on level, stable ground. Center the mold on the base plate. The mold shall be placed inverted with the smaller diameter opening down.

c. Fill the mold in one lift without vibration, rodding, or tapping.

d. Strike off the surface of the concrete level with the top of the mold using the tamping rod or strike-off bar. Remove surplus concrete from around the base of the mold and base plate surface.

e. Raise the mold vertically a distance of 225 ± 75 mm (9 ± 3 in.) in 3 ± 1 seconds without any lateral or torsional motion. Complete the test procedure from the start of filling through removal of the mold without interruption and within an elapsed time of 2.5 minutes.

f. *Optional.* Measured from the time the mold is lifted, determine the time in seconds it takes for the concrete flow to reach a diameter of 500 mm (20 in.). This is the T_{50} time.

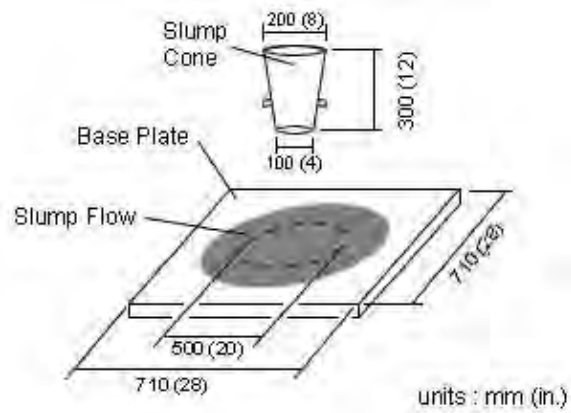

Figure 1. Slump Flow Test

g. When the concrete has stopped flowing, measure the maximum diameter of the resulting slump flow and measure the diameter perpendicular to the maximum. Each measurement shall be to the nearest 10 mm (0.5 in.). If the two measurements differ by more than 50 mm (2 in.), verify base plate to be level, and test again.

h. Calculate the average of the two measured diameters. This is the slump flow.

i. By visual examination, rate the Visual Stability Index (VSI) of the SCC using the criteria in Table 1 and illustrated in Figures 2 – 9.

Table 1 – Visual Stability Index (VSI)

VSI	***Criteria***
0 stable	No evidence of segregation or bleeding in slump flow, mixer drum/pan, or sampling receptacle (e.g. wheelbarrow).
1 stable	No mortar halo or coarse aggregate heaping in the slump flow, but some slight bleeding and/or air popping is evident on the surface of the slump flow, or concrete in the mixer drum/pan or sampling receptacle (e.g. wheelbarrow).
2 unstable	Slight mortar halo, ≤ 10 mm (0.5 in.) wide, and/or coarse aggregate heaping in the slump flow, and highly noticeable bleeding in the mixer drum/pan or sampling receptacle (e.g. wheelbarrow).
3 unstable	Clearly segregated by evidence of a large mortar halo, > 10 mm (0.5 in.), and/or large coarse aggregate pile in the slump flow, and a thick layer of paste on the surface of the concrete sample in the mixer drum or sampling receptacle (e.g. wheelbarrow).

5. REPORT

a. Report the slump flow (average of two measured diameters) to the nearest 5 mm (0.25 in.).

b. Report the VSI.

c. *Optional.* Report the T_{50} time to the nearest 0.2 second.

Figure 2. VSI = 0, stable

Figure 3. VSI = 0, stable

Figure 4. VSI = 1, stable

Figure 5. VSI = 1, stable

Figure 6. VSI = 2, unstable

Figure 7. VSI = 2, unstable

Figure 8. VSI = 3, unstable

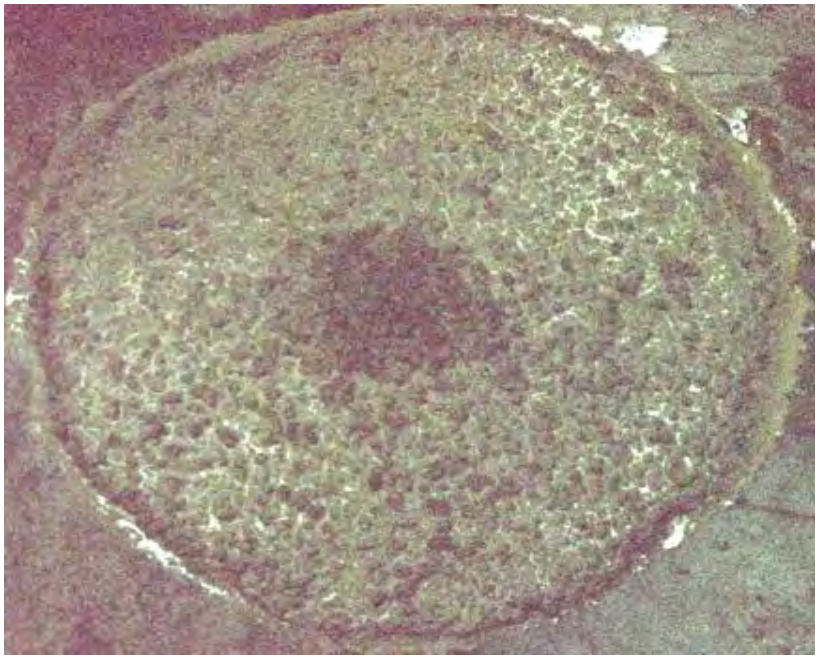

Figure 9. VSI = 3, unstable

Illinois Test Procedure SCC-3
Effective Date: May 1, 2007

Standard Test Method for Passing Ability of Self-Consolidating Concrete by J-Ring and Slump Cone

Referenced Test Procedure(s):

1. Illinois Test Procedure SCC-1, Sampling, Determining Yield and Air Content, and Making and Curing Strength Test Specimens of Self-Consolidating Concrete

2. Illinois Test Procedure SCC-2, Slump Flow and Stability of Self-Consolidating Concrete

3. AASHTO T 119 (Illinois Modified), Slump of Hydraulic-Cement Concrete

4. ASTM E 29 (Illinois Modified), Standard Practice for Using Significant Digits in Test Data to Determine Conformance with Specifications

To maintain brevity in the text, the following will apply:
Example: Illinois Test Procedure SCC-1 will be designated as "Illinois Test SCC-1."
AASHTO T 119 (Illinois Modified) will be designated as "T 119."
ASTM E 29 (Illinois Modified) will be designated as "ASTM E 29."

1. GENERAL

This test method covers the determination of the flowability and passing ability of self-consolidating concrete (SCC) using the J-Ring and Slump Cone. The diameter of the unobstructed slump flow versus the obstructed slump flow passing through the J-Ring is a measure of the passing ability of SCC.

All rounding shall be according to ASTM E 29.

2. EQUIPMENT

a. J-Ring – See Figure 1. The J-Ring shall consist of sixteen evenly spaced smooth steel rods of 16 mm (5/8 in.) diameter and 100 mm (4 in.) length.

b. Mold and Tamping Rod – The mold and tamping rod shall conform to that described in T 119.

c. Strike-Off Bar – *Optional.* The strike-off bar shall be a flat straight bar minimum 3 x 20 x 300 mm (0.125 x 0.75 x 12 in.).

d. Base Plate – The base plate shall be of a smooth, rigid, nonabsorbent poly methyl methacrylate (e.g. Plexiglas®, Lucite®, etc.) or high-density overlay (HDO) plywood material, and be of sufficient dimensions to accommodate the maximum slump flow.

e. Suitable container for filling inverted slump cone.

f. Measuring Tape – The measuring tape shall have a minimum gradation of 10 mm (0.5 in.).

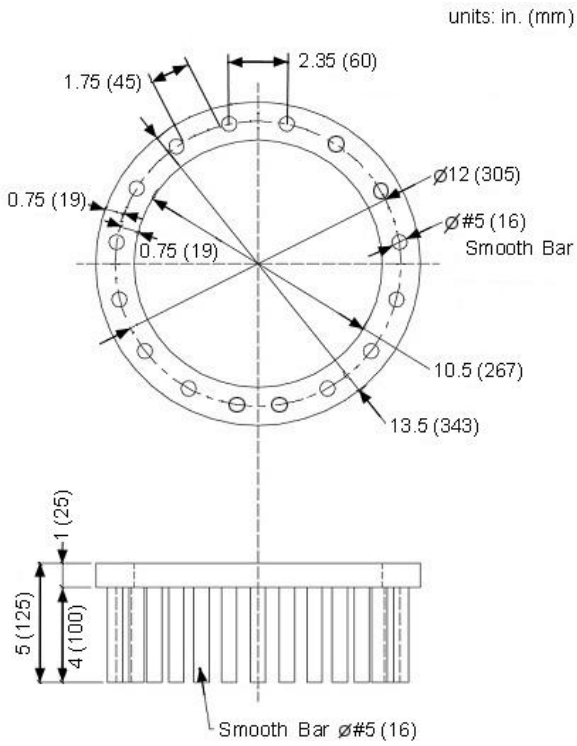

Figure 1. J-Ring Apparatus

3. MATERIALS

The sample of SCC from which test specimens are made shall be obtained according to Section I of Illinois Test SCC-1.

4. PROCEDURE

a. Dampen the J-Ring, slump cone, and base plate.

b. Place the base plate on level, stable ground. Center the J-Ring on the base plate. The mold shall be centered within the J-Ring and inverted with the smaller diameter opening down.

c. Fill the mold in one lift without vibration, roddding, or tapping.

d. Strike off the surface of the concrete level with the top of the mold using the tamping rod or strike-off bar. Remove surplus concrete from around the base of the mold and base plate surface.

e. Raise the mold vertically a distance of 225 ± 75 mm (9 ± 3 in.) in 3 ± 1 seconds without any lateral or torsional motion. Complete the test procedure from the start of filling through removal of the mold without interruption and within an elapsed time of 2.5 minutes.

f. When the concrete has stopped flowing, measure the maximum diameter of the resulting slump flow and measure the diameter perpendicular to the maximum. Each measurement shall be to the nearest 10 mm (0.5 in.). If the two measurements differ by more than 50 mm (2 in.), verify base plate to be level, and test again.

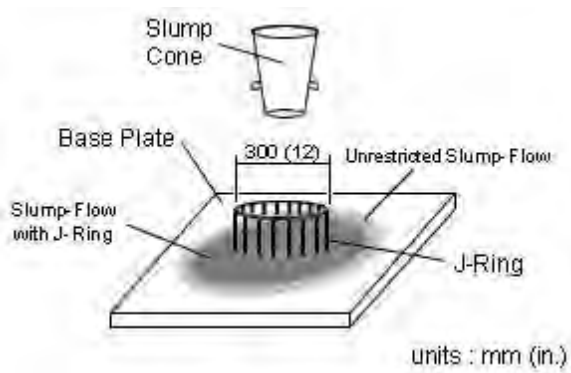

Figure 2. J-Ring Test

g. Calculate the average of the two measured diameters. This is the J-Ring flow.

h. Calculate the difference between the J-Ring flow and the unobstructed slump flow, as tested according to Illinois Test SCC-2, of the same representative sample. This is the J-Ring value. Rate the passing ability of SCC using the criteria in Table 1.

Table 1 – Passing Ability Rating

J-Ring Value, in. (mm)	Passing Ability Rating	Remarks
0 – 1 (0 – 25)	0	High passing ability
> 1 – 2 (> 25 – 50)	1	Moderate passing ability
> 2 (> 50)	2	Low passing ability

5. REPORT

a. Report the unobstructed slump flow (average of two measured diameters) and J-Ring flow (average of two measured diameters) to the nearest 5 mm (0.25 in.).

b. Report the J-Ring value and corresponding passing ability rating.

Illinois Test Procedure SCC-4
Effective Date: July 1, 2005

Standard Test Method for Passing Ability of Self-Consolidating Concrete by L-Box

Referenced Test Procedure(s):

1. Illinois Test Procedure SCC-1, Sampling, Determining Yield and Air Content, and Making and Curing Strength Test Specimens of Self-Consolidating Concrete

2. AASHTO T 119 (Illinois Modified), Slump of Hydraulic-Cement Concrete

3. ASTM E 29 (Illinois Modified), Standard Practice for Using Significant Digits in Test Data to Determine Conformance with Specifications

To maintain brevity in the text, the following will apply:
Example: Illinois Test Procedure SCC-1 will be designated as "Illinois Test SCC-1."
AASHTO T 119 (Illinois Modified) will be designated as "T 119."
ASTM E 29 (Illinois Modified) will be designated as "ASTM E 29."

1. GENERAL

This test method covers the determination of the flowability and passing ability of self-consolidating concrete (SCC) using the L-Box. The flow heights ratio is a measure of the passing ability of SCC. The flow times (T_{20} and T_{40}) are a measure of the flowability of SCC.

All rounding shall be according to ASTM E 29.

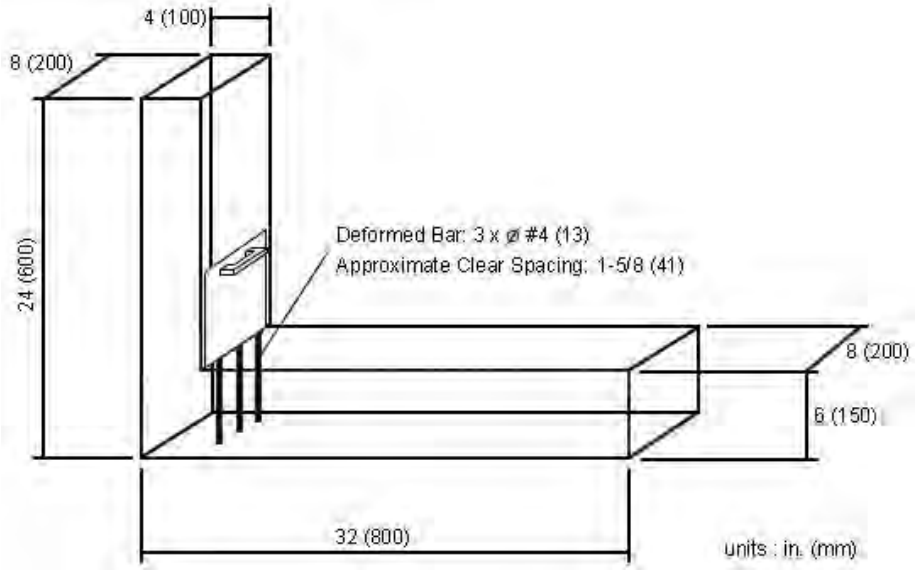

Figure 1. L-Box Apparatus

2. EQUIPMENT

a. L-Box – See Figure 1. The inside surface of the L-Box walls shall be of a smooth, rigid, nonabsorbent material.

b. Tamping Rod or Strike-Off Bar – The tamping rod shall conform to that described in T 119. The strike-off bar shall be a flat straight bar at least 0.125 x 0.75 x 12 in. (3 x 20 x 300 mm).

c. Suitable container for filling L-Box.

d. Measuring Tape – The measuring tape shall have a minimum gradation of 0.25 in. (5 mm).

e. Stopwatch – *Optional.* The stopwatch shall have a minimum reading of 0.2 seconds.

3. MATERIALS

The sample of SCC from which test specimens are made shall be obtained according to Section I of Illinois Test SCC-1.

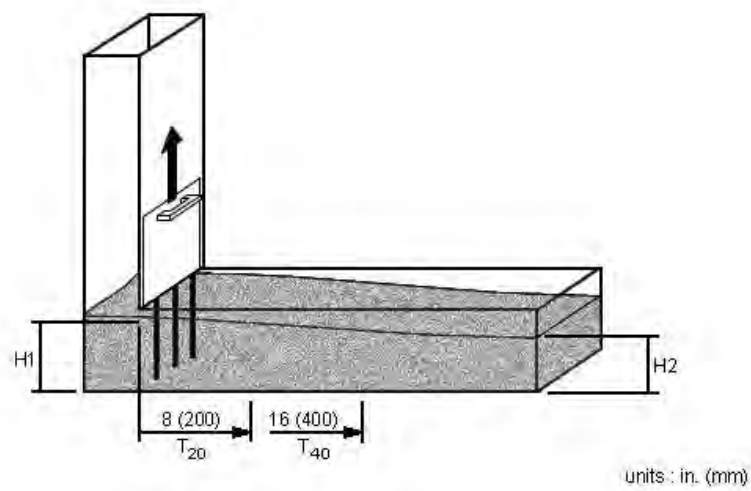

Figure 2. L-Box Test

4. PROCEDURE

a. Dampen the L-Box.

b. Place the L-Box on level, stable ground.

c. Ensure the sliding gate is shut, and fill the vertical of the L-Box in one lift without vibration, rodding, or tapping.

d. Strike off the surface of the concrete level with the top of the L-Box using the tamping rod or strike-off bar.

e. Allow the test specimen to stand for 1 minute.

f. Raise the sliding gate. Complete the test procedure from the start of filling through opening of the sliding gate without interruption and within 5 minutes.

g. *Optional.* Determine the time in seconds it takes for the concrete flow to travel 8 in. (200 mm) and 16 in. (400 mm), as measured from the time the sliding gate is lifted. These are the T_{20} and T_{40} times, respectively. Refer to Figure 2.

h. When the concrete has stopped flowing, measure the height of the resulting flow at the sliding gate, H1, and at the end of the horizontal, H2, to the nearest 0.25 in. (5 mm). However, if a significant amount of coarse aggregate has not passed through the gate, then the test shall be considered failing and the blocking ratio disregarded.

i. Calculate the blocking ratio as follows:

$$\textit{Blocking Ratio} = \frac{H2}{H1} \times 100$$

5. REPORT

a. Report the filling heights, H1 and H2, to the nearest 0.25 in. (5 mm).

b. Report the blocking ratio, H2/H1, to the nearest 1 percent.

c. Report observations of aggregate blockage, bleeding, and/or air popping of the concrete.

d. *Optional.* Report the T_{20} and T_{40} flow times to the nearest 0.2 second.

Illinois Test Procedure SCC-6
Effective Date: April 1, 2011

Standard Test Method for Static Segregation of Hardened Self-Consolidating Concrete Cylinders[1]

Referenced Test Procedure(s):

1. Illinois Test Procedure SCC-1, Sampling, Determining Yield and Air Content, and Making and Curing Strength Test Specimens of Self-Consolidating Concrete
2. AASHTO T 22 (Illinois Modified), Compressive Strength of Cylindrical Concrete Specimens
3. AASHTO T 23 (Illinois Modified), Making and Curing Concrete Test Specimens in the Field
4. AASHTO T 24, Obtaining and Testing Drilled Cores and Sawed Beams of Concrete
5. AASHTO T 119 (Illinois Modified), Slump of Hydraulic-Cement Concrete
6. AASHTO R 39 (Illinois Modified), Making and Curing Concrete Test Specimens in the Laboratory

To maintain brevity in the text, the following will apply:
Example: Illinois Test Procedure SCC-1 will be designated as "Illinois Test SCC-1."
AASHTO T 22 (Illinois Modified) will be designated as "T 22."

1. GENERAL

This test method covers the determination of the static segregation resistance (stability) of self-consolidating concrete (SCC). The visual assessment, using a Hardened Visual Stability Index (HVSI), of cast or cored hardened cylinders cut lengthwise in two is a measure of the stability of SCC.

2. EQUIPMENT

a. Mold – The mold shall be a 6 x 12 in. (150 x 300 mm) cylinder mold and conform to T 23 or R 39.

b. Tamping Rod or Strike-Off Bar – The tamping rod shall conform to that described in T 119. The strike-off bar shall be a flat straight bar at least 0.125 x 0.75 x 12 in. (3 x 20 x 300 mm).

c. Suitable container for filling specimen molds.

d. Saw – The saw shall have a diamond or silicon-carbide cutting edge and shall be capable of cutting specimens without excessive heating or shock.

e. Core Drill – The core drill shall have diamond impregnated bits attached to a core barrel.

3. MATERIALS

The sample of SCC from which fresh test specimens are made shall be obtained according to Section I of Illinois Test SCC-1. Cored specimens from hardened concrete shall be obtained according to T 24 and have a minimum diameter of 50 mm (2 in.). When necessary as determined by the Engineer, the core may be taken so that its axis is perpendicular to the concrete as it was originally placed as long as the core diameter is sufficiently large enough to assess extent of static segregation.

[1]Test method developed by the Illinois Department of Transportation (Original Effective Date: August 12, 2004).). Test method submitted to AASHTO by Illinois Department of Transportation. The AASHTO version is similar and is known as AASHTO PP 58.

4. PROCEDURE

a. A minimum of two fresh test specimens shall be made according to T 23 or R 39, except for the following:

i. The specimen molds shall be filled in one lift using a suitable container without vibration, rodding, or tapping.

ii. Strike off the surface of the concrete level with the top of the mold using the strike-off bar or tamping rod.

iii. The slump flow, VSI, air content, and temperature of each batch of concrete, from which specimens are made, shall be measured immediately after remixing.

b. Immediately after being struck off, the specimens shall be capped with a plastic cylinder lid and moved to the storage place where they will remain undisturbed. The specimens shall be assigned an identification number, and the date of molding, location of concrete, and mix design number shall be recorded.

c. Before being subjected to sawing, the specimens shall have had a minimum curing period of 24 hours at a minimum temperature of 16 °C (60 °F) ***or*** attained a minimum compressive strength of 6200 kPa (900 psi) according to T 22.

d. The specimens shall be saw cut lengthwise down the center through its diameter. If the specimen cannot be satisfactorily sawed smooth from lack of curing, then the remaining specimen(s) shall remain undisturbed for an additional minimum curing period of 24 hours before being subjected to sawing.

e. Make a visual assessment of the cut plane of the hardened concrete cylinder(s) using the criteria in Table 1 and illustrated in Figures 1 – 8. The cut plane shall be wetted to facilitate visual inspection.

Table 1 – Hardened Visual Stability Index (HVSI)

HVSI	Criteria
0 stable	No mortar layer at the top of the cut plane and no variance in size and percent area of coarse aggregate distribution from top to bottom.
1 stable	Slight mortar layer, less than or equal to 6 mm (1/4 in.) tall, at the top of the cut plane and slight variance in size and percent area of coarse aggregate distribution from top to bottom.
2 unstable	Mortar layer, less than or equal to 25 mm (1 in.) tall, at the top of the cut plane and distinct variance in size and percent area of coarse aggregate distribution from top to bottom.
3 unstable	Clearly segregated as evidenced by a mortar layer greater than 25 mm (1 in.) tall and considerable variance in size and percent area of coarse aggregate distribution from top to bottom.

5. REPORT

a. Report the identification number and required information for each hardened specimen.

b. Report the Hardened Visual Stability Index (HVSI) for each hardened specimen.

[1]Test method developed by the Illinois Department of Transportation (Original Effective Date: August 12, 2004).). Test method submitted to AASHTO by Illinois Department of Transportation. The AASHTO version is similar and is known as AASHTO PP 58.

Single Coarse Aggregate Mixture **Uniformly Graded Coarse Aggregate Mixture**

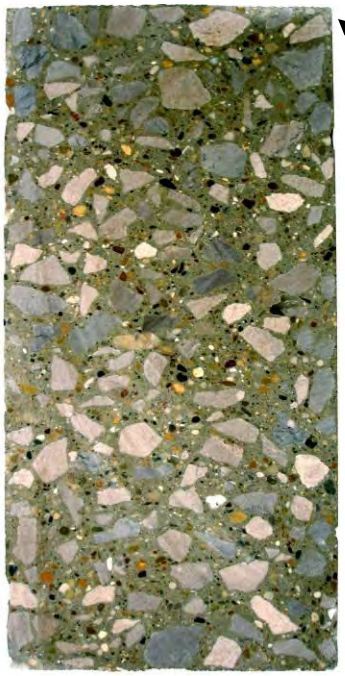

No mortar layer.

Uniform distribution of coarse aggregate from top to bottom.

Figure 1. HVSI = 0, stable

Figure 2. HVSI = 0, stable

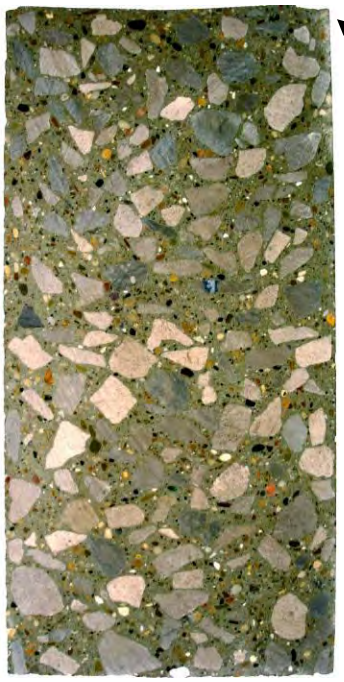

Slight mortar layer, ≤ 6 mm (1/4 in.), and slight variance of coarse aggregate distribution from top to bottom.

Figure 3. HVSI = 1, stable

Figure 4. HVSI = 1, stable

[1]Test method developed by the Illinois Department of Transportation (Original Effective Date: August 12, 2004).). Test method submitted to AASHTO by Illinois Department of Transportation. The AASHTO version is similar and is known as AASHTO PP 58.

Single Coarse Aggregate Mixture **Uniformly Graded Coarse Aggregate Mixture**

Visible mortar layer ≤ 1 in. (25 mm), and distinct variance of coarse aggregate distribution from top to bottom.

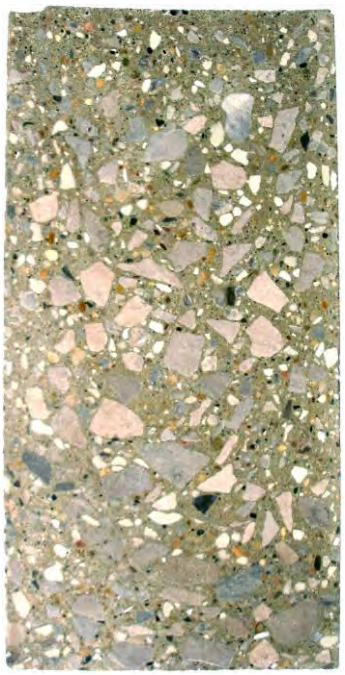

Figure 5. HVSI = 2, unstable

Figure 6. HVSI = 2, unstable

Visible Mortar layer > 1 in. (25 mm) and considerable variance of coarse aggregate distribution from top to bottom.

Note contrast at top. This is a layer of foam, which may be visible in any stable or unstable mix.

Figure 7. HVSI = 3, unstable

Figure 8. HVSI = 3, unstable

[1]Test method developed by the Illinois Department of Transportation (Original Effective Date: August 12, 2004).). Test method submitted to AASHTO by Illinois Department of Transportation. The AASHTO version is similar and is known as AASHTO PP 58.

Illinois Provisional Test Procedure SCC-8
Effective Date: January 1, 2008

Provisional Test Method for Assessment of Dynamic Segregation of Self-Consolidating Concrete During Placement[1]

This is a provisional test method requiring field trials.

Referenced Test Procedure(s):

1. Illinois Test Procedure SCC-6, Standard Test Method for Static Segregation of Hardened Self-Consolidating Concrete Cylinders
2. Illinois Provisional Test Procedure SCC-7, Provisional Test Method for Static Segregation of Fresh Self-Consolidating Concrete Cylinders Using the Static Segregation Probe
3. Illinois Specification 101, Minimum Requirements for Electronic Balances
4. AASHTO M 92, Standard Specification for Wire Cloth Sieves for Testing Purposes
5. AASHTO T 23 (Illinois Modified), Making and Curing Concrete Test Specimens in the Field
6. AASHTO T 119 (Illinois Modified), Slump of Hydraulic-Cement Concrete
7. ASTM E 29 (Illinois Modified), Standard Practice for Using Significant Digits in Test Data to Determine Conformance with Specifications

To maintain brevity in the text, the following will apply:
Example: Illinois Test Procedure SCC-1 will be designated as "Illinois Test SCC-1."
Illinois Provisional Test Procedure SCC-7 will be designated as "Illinois Provisional Test SCC-7."
AASHTO T 23 (Illinois Modified) will be designated as "T 23."
ASTM E 29 (Illinois Modified) will be designated as "ASTM E 29."

1. GENERAL

This test method covers the evaluation of the dynamic segregation resistance (stability) of self-consolidating concrete (SCC). The visual assessment using a Hardened Visual Stability Index (HVSI), the settlement depth using the static segregation probe, or the coarse aggregate weight (mass) retained ratio are measures of the stability of SCC.

All rounding shall be according to ASTM E 29.

2. EQUIPMENT

a. Specimen Mold – The mold shall be a 6 x 12 in. (150 x 300 mm) cylinder mold and conform to T 23.

b. Tamping Rod or Strike-Off Bar – The tamping rod shall conform to that described in T 119. The strike-off bar shall be a flat straight bar at least 0.125 x 0.75 x 12 in. (3 x 20 x 300 mm).

c. Suitable container for filling specimen molds.

d. Saw – *Procedure Option A only*, The saw shall have a diamond or silicon-carbide cutting edge and shall be capable of cutting specimens without excessive heating or shock.

e. Static Segregation Probe – *Procedure Option B only*, The static segregation probe shall be according to Illinois Provisional Test SCC-7.

f. Sieve – *Procedure Option C only*, The sieve shall be a No. 4 (4.75 mm) rectangular sieve of minimum dimensions 13 x 25 in. (330 x 635 mm) manufactured according to AASHTO M 92.

g. Balance – *Procedure Option C only*, The balance shall be according to Illinois Specification 101 for portland cement concrete unit weight measurements.

[1]Test method developed by the Illinois Department of Transportation (Original Effective Date: May 1, 2006).

3. MATERIALS

Test specimens shall be made from separate samples of SCC obtained at or near 1) the point of discharge by deliver equipment, and 2) the point of flow termination as approved by the Engineer.

4. PROCEDURE

Option A—For each of the two samples obtained (i.e., one at or near the point of discharge and another at point of flow termination), conduct testing according to Illinois Test SCC-6 for assessment of Hardened Visual Stability Index (HVSI).

Option B—For each of the two samples obtained (i.e., one at or near the point of discharge and another at point of flow termination), conduct testing according to Illinois Provisional Test SCC-7 for assessment of the Measured Stability Index (MSI).

Option C—Obtain two samples (i.e., one at or near the point of discharge and another at point of flow termination) and determine the Dynamic Segregation Index as follows:

a. Fill the mold in one lift without vibration, rodding, or tapping.

b. Strike off the surface of the concrete level with the top of the mold using the tamping rod or strike-off bar.

c. Wet wash over the No. 4 (4.75 mm) sieve the sample collected at or near the point of discharge.

d. Blot any free water from the retained coarse aggregate particles' surface with a towel to achieve a saturated surface dry (SSD) condition.
e. Determine the weight (mass) of the coarse aggregate to the nearest 0.1 lb. (50 g).
f. Repeat a. – e. for the sample collected at the point of flow termination.
g. Calculate the Dynamic Segregation Index (DSI) as follows:

$$DSI = \frac{(CA_1 - CA_2)}{CA_1} \times 100$$

Where: CA_1 = weight (mass) of coarse aggregate collected at or near the point of discharge
CA_2 = weight (mass) of coarse aggregate collected at the point of flow termination

5. REPORT

For all procedures,
a. Report maximum length of flow and maximum and minimum width of flow path.

b. Report approximate rate, feet per minute (meters per minute).

c. Report reinforcement bar size(s) and typical longitudinal and lateral spacing.

Procedure Option A only,
a. Report the Hardened Visual Stability Index (HVSI) rating for each hardened specimen.

Procedure Option B only,
a. Report the settlement depth of the static segregation probe to the nearest 1/8 in. (1 mm).

b. Report the Measured Stability Index (MSI).

Procedure Option C only,
e. Report the SSD weight (mass) of coarse aggregate collected at or near the point of discharge and point of flow termination, CA_1 and CA_2, respectively, to the nearest 0.1 lb. (50 g).

f. Report the Dynamic Segregation Index (DSI) to the nearest 1 percent.

[1]Test method developed by the Illinois Department of Transportation (Original Effective Date: May 1, 2006).

Appendix H-B

Illinois Department of Transportation

Illinois Test Procedure SCC-1 Checklist A
Sampling Fresh Self-Consolidating Concrete
(Reference: Illinois Modified AASHTO T 141)

The following is a summary checklist of the key steps involved in sampling freshly mixed self-consolidating concrete.

Did the tester:	**YES**	**NO**
1. Sample the concrete after discharge of at least 4 ft^3 (0.1 m^3) of concrete?	☐	☐
2. Repeatedly pass a receptacle through the entire discharge stream, or completely divert the discharge stream into a sampling container?	☐	☐
3. Remix the concrete with a damp shovel?	☐	☐
4. Obtain the sample within a 2 minute interval?	☐	☐
5. Start tests for slump flow and air within 5 minutes after the final portion of the sample was obtained?	☐	☐
6. Start molding cylinders or beams within 15 minutes after the sample was fabricated?	☐	☐
7. Protect the sample against contamination and rapid evaporation?	☐	☐

Tester: _____ Observer: _____ Date: _____

REMARKS: _____

Illinois Department of Transportation

Illinois Test Procedure SCC-1 Checklist B

Unit Weight, Yield, and Air Content (Gravimetric) of Self-Consolidating Concrete

(Reference Illinois Modified AASHTO T 121)

The following is a summary checklist of the key steps involved in determining the unit weight of freshly mixed self-consolidating concrete.

Did the tester:	**YES**	**NO**
1. Determine and record the weight (mass) of the empty container?	☐	☐
2. Dampen the container, the hand scoop, and the strike-off plate?	☐	☐
3. Fill the container in one lift, slightly overfilling the top layer?	☐	☐
4. Strike off the concrete level with the top of the container using the strike-off plate and clean off the rim?	☐	☐
5. Determine and record the total mass (weight) of the container and concrete?	☐	☐

Tester: _____ Observer: _____ Date: _____

REMARKS: _____

Illinois Department of Transportation

Illinois Test Procedure SCC-1 Checklist C
Making and Curing Self-Consolidating Concrete Test Specimens in the Field
(Reference: Illinois Modified AASHTO T 23)

The following is a summary checklist of the key steps involved in making and curing self-consolidating concrete test specimens: cylinders and beams.

Did the tester:	**YES**	**NO**
Cylinders:		
1. Place the molds on a flat, level, firm surface which was free of vibration or other disturbances?	☐	☐
2. Fill the mold in one lift, slightly overfilling the top layer?	☐	☐
3. Strike off the surface with a tamping rod or strike-off bar to produce a flat and even surface, using a minimum amount of manipulation?	☐	☐
4. Cover the specimens with a plastic cylinder lid or with a plastic sheet secured by a rubber band?	☐	☐
5. Identify the specimen by writing on the outside of the mold?	☐	☐
6. Place the specimens where they could remain undisturbed, and within the curing temperature range of 60° F to 80° F (16° C to 27° C)?	☐	☐
Beams:		
1. Apply a light coating of form release to the inside of the mold?	☐	☐
2. Place the molds on a flat, level, firm surface which was free of vibration or other disturbances?	☐	☐
3. Strike off the surface with a wood float or trowel to produce a flat and even surface, using a minimum amount of manipulation?	☐	☐
4. Identify the specimen by writing on the outside of the mold, or by inserting a weatherproof tag at one end of the mold?	☐	☐
5. Cure the beam by covering with a plastic cover that has an absorbent pad, or with impervious plastic that has wet burlap on top?	☐	☐
6. Place the specimens where they could remain undisturbed, and within the curing temperature range of 60° F to 80° F (16° C to 27° C)?	☐	☐

Tester: _____ Observer: _____ Date: _____

REMARKS: _____

Illinois Department of Transportation

Illinois Test Procedure SCC-2 Checklist
Slump Flow and Stability of Self-Consolidating Concrete

The following is a summary checklist of the key steps involved in testing the slump flow and stability of freshly mixed self-consolidating concrete (SCC).

Did the tester:	**YES**	**NO**
1. Dampen the slump cone, tamping rod or strike-off bar, and base plate?	☐	☐
2. Place the cone's smaller diameter opening in the middle of the base plate?	☐	☐
3. Fill the cone in one lift without vibration, rodding, or tapping?	☐	☐
4. Strike off the concrete level with the top of the cone using the tamping rod or strike-off bar?	☐	☐
5. Remove surplus concrete from around the base of the mold and base plate surface?	☐	☐
6. Raise the cone vertically 9 ± 3 in. (225 ± 75 mm) in one smooth motion, without lateral or torsional motion, in 3 ± 1 seconds?	☐	☐
7. Perform the test from start to raising of the cone within 2.5 minutes?	☐	☐
8. Measure the slump flow's maximum diameter and measure the diameter perpendicular to the maximum to the nearest 0.5 in. (10 mm)?	☐	☐
9. Rate the stability of the SCC according to the Visual Stability Index (VSI)?	☐	☐

Tester: _____ Observer: _____ Date: _____

REMARKS: _____

.

Illinois Department of Transportation

Illinois Test Procedure SCC-3 Checklist
Passing Ability of Self-Consolidating Concrete by J-Ring and Slump Cone

The following is a summary checklist of the key steps involved in testing the passing ability of freshly mixed self-consolidating concrete (SCC) using the J-Ring and slump cone.

Did the tester:	**YES**	**NO**
1. Dampen the slump cone, tamping rod or strike-off bar, base plate, and J-Ring?	☐	☐
2. Place the J-Ring in the middle of the base plate, and place the cone's smaller diameter opening centered within the J-Ring?	☐	☐
3. Fill the cone in one lift without vibration, rodding, or tapping?	☐	☐
4. Strike off the concrete level with the top of the cone using the tamping rod or strike-off bar?	☐	☐
5. Remove surplus concrete from around the base of the mold and base plate surface?	☐	☐
6. Raise the cone vertically 9 ± 3 in. (225 ± 75 mm) in one smooth motion, without lateral or torsional motion, in 3 ± 1 seconds?	☐	☐
7. Perform the test from start to raising of the cone within 2.5 minutes?	☐	☐
8. Measure the slump flow's maximum diameter and measure the diameter perpendicular to the maximum to the nearest 0.5 in. (10 mm)?	☐	☐
9. Calculate the difference between the J-Ring flow and the unobstructed slump flow, as tested according to Illinois Test SCC-2?	☐	☐
10. Rate the passing ability according to the Passing Ability Rating?	☐	☐

Tester: _____ Observer: _____ Date: _____

REMARKS: _____

_____

_____

_____

Illinois Department of Transportation

Illinois Test Procedure SCC-4 Checklist
Passing Ability of Self-Consolidating Concrete by L-Box

The following is a summary checklist of the key steps involved in testing the passing ability of freshly mixed self-consolidating concrete (SCC) using the L-Box.

Did the tester:	**YES**	**NO**
1. Dampen the L-Box and tamping rod or strike-off bar?	☐	☐
2. Shut the sliding gate, and fill the vertical of the L-Box in one lift without vibration, rodding, or tapping?	☐	☐
3. Strike off the concrete level with the top of the L-Box using the tamping rod or strike-off bar?	☐	☐
4. Raise the sliding gate vertically in one smooth motion?	☐	☐
5. Perform the test from start to raising of the gate within 5 minutes?	☐	☐
6. Measure the heights at the gate, *H1*, and the end of the L-Box, *H2*, to the nearest 0.25 in. (5 mm)?	☐	☐
7. Calculate the Blocking Ratio, $\frac{H2}{H1} \times 100$?	☐	☐

Tester: _____ Observer: _____ Date: _____

REMARKS: _____

Illinois Department of Transportation

Illinois Test Procedure SCC-6 Checklist
Static Segregation of Hardened Self-Consolidating Concrete Cylinders

The following is a summary checklist of the key steps involved in making self-consolidating concrete cylinder specimens.

Did the tester:	**YES**	**NO**
1. Place the molds on a flat, level, firm surface which was free of vibration or other disturbances?	☐	☐
2. Fill the mold in one lift, slightly overfilling the top layer?	☐	☐
3. Strike off the surface with a tamping rod or strike-off bar to produce a flat and even surface, using a minimum amount of manipulation?	☐	☐
4. Cover the specimens with a plastic cylinder lid or with a plastic sheet secured by a rubber band?	☐	☐
5. Identify the specimen by writing on the outside of the mold?	☐	☐
6. Place the specimens where they could remain undisturbed, and within the curing temperature range of 60° F to 80° F (16° C to 27° C)?	☐	☐
7. Cure the specimens for a minimum 24 ± 0.5 hours ***or*** ensured a minimum compressive strength of 900 psi (6200 kPa)?	☐	☐
8. Saw cut the specimens lengthwise down the center?	☐	☐
9. Make a visual assessment of the cut plane of the hardened concrete cylinder according to the Hardened Visual Stability Index (HVSI)?	☐	☐

Tester: _____ Observer: _____ Date: _____

REMARKS: _____

_____

_____

_____

This Page Reserved

Appendix H-C

Illinois Test Procedure SCC-10
Effective Date: June 1, 2012

Standard Method of Test for

Determining Formwork Pressure of Fresh Self-Consolidating Concrete Using Pressure Transducers[1]

1. SCOPE

1.1 This method covers the measurement of formwork pressure of fresh self-consolidating concrete (SCC) using pressure transducers attached to formwork.

1.2 This is a field test with the intention of measuring formwork pressure during placement of SCC.

1.3 The text of this standard references notes and footnotes that provide explanatory information. These notes and footnotes (excluding those in tables and figures) shall not be considered as requirements for this standard.

1.4 The values stated in SI units are to be regarded as the standard.

1.5 *This standard may involve hazardous materials, operations, and equipment. This standard does not purport to address all of the safety concerns, if any, associated with its use. It is the responsibility of the user of this standard to establish appropriate safety and health practices and determine the applicability of regulatory limitations prior to use.*

2. REFERENCED DOCUMENTS

2.1 *ASTM Standards*:

- C 125, Standard Terminology Relating to Concrete and Concrete Aggregates

3. SIGNIFICANCE AND USE

3.1 This method is applicable when there is a concern about SCC form pressures which may exceed the rated strength of the formwork. SCC shall be defined by ASTM C 125.

Note 1— Formwork less than or equal to 3 m (10 ft) tall constructed of commercial forms rated at 57.5 kPa (1200 psf) or greater may be able to resist the SCC pressures encountered in the field. However, the engineer is still responsible for the formwork design.

[1]Test method developed by the Illinois Department of Transportation (Original Effective Date: January 1, 2008). The test method provided is the version submitted to AASHTO for adoptance as an AASHTO test method.

[1]Test method developed by the Illinois Department of Transportation (Original Effective Date: January 1, 2008).

4. APPARATUS AND MATERIALS

4.1 *Pressure Transducer*— a suitable pressure transducer for measuring pressure from SCC.

Figure 1—Pressure Transducer

4.2 *Data Acquisition System*— a suitable data acquisition interface for obtaining pressure readings from pressure transducers.

4.3 *Bracket*— a bracket conforming to the pressure transducer and formwork geometry shall be used for attaching the pressure transducer to the formwork. Figures 2 and 3 show one such bracket system.

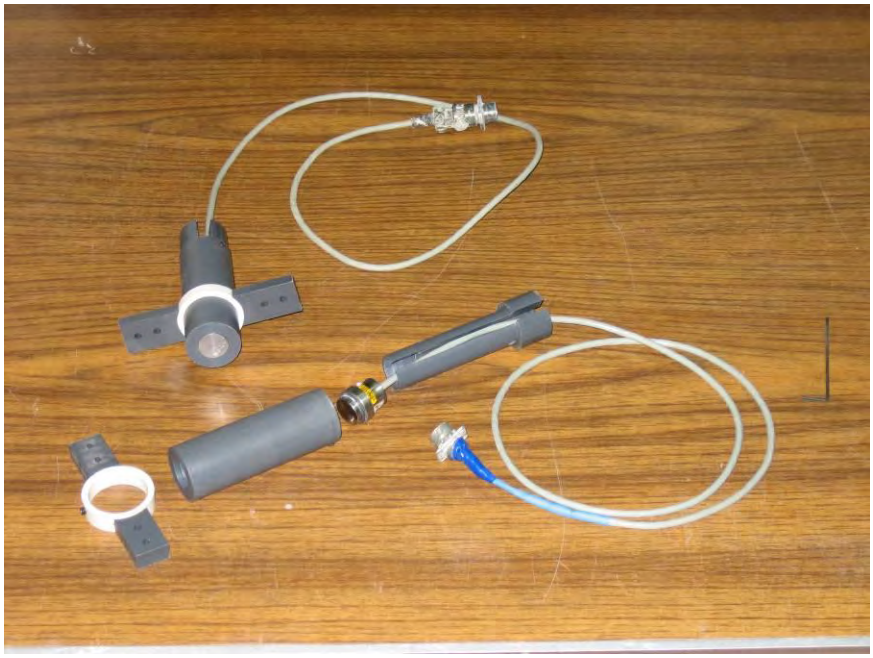

Figure 2—Bracket for Attaching Pressure Transducer to Formwork

[1]Test method developed by the Illinois Department of Transportation (Original Effective Date: January 1, 2008).

Figure 3—Bracket with Pressure Transducer Attached to Formwork

4.4 *Portable Hand Drill and Bit*— a suitable drill and bit for drilling pressure transducer access holes.

4.5 *Baby Powder and Cellophane Wrap*— suitable materials for covering the pressure transducer face.

Note 2— A Vishay Model P3 Strain Indicator and Recorder with Honeywell Model AB/HP pressure transducers have been used for measuring pressures from SCC. The Vishay unit will accommodate four pressure transducers, and the required access hole for the Honeywell Model AB/HP pressure transducer is 35 mm (1 3/8 in.) in diameter.

5. PROCEDURE

5.1 *Prepare access hole for pressure transducer*:

5.1.1 Drill an appropriate size access hole through the formwork for the pressure transducer which will allow measurement of pressure.

5.2 *Mount pressure transducer:*

5.2.1 Mount the pressure transducer to the formwork using the bracket system. The pressure transducer face shall extend through a hole drilled in the formwork, and shall align flush with the inside form surface.

5.2.2 The face of the pressure transducer shall be protected with a light dusting of baby powder and a single layer of cellophane wrap on top.

Note 3—This technique prevents direct contact of the SCC with the pressure transducer face while ensuring measurement of pressure.

5.3 *Location of pressure transducers:*

5.3.1 Install a minimum of one pressure transducer at or near each point of SCC placement. The first pressure transducer below the point of SCC placement shall be approximately 300 mm (12 in.) above the base of the formwork. Additional pressure transducers shall be installed above the bottom transducer at the direction of the formwork design engineer.

[1]Test method developed by the Illinois Department of Transportation (Original Effective Date: January 1, 2008).

Note 4— The reason a pressure transducer is installed at or near the point of SCC placement is due to the higher formwork pressure at this location.

5.4 *Recording pressure and form filling rate:*

5.4.1 The pressure shall be observed and recorded periodically to ensure that the pressure remains under the rated strength of the formwork during the pour. The calculation and recording of form filling rate during the pour should also be performed periodically to evaluate the pour rate influence.

Note 5— The measured pressure will rise as the formwork is filled with SCC, but will eventually slow down and start falling as the SCC begins to gel and stiffen.

Formwork pressure is also a function of the form filling rate. If the rate is low, the maximum pressure will be relatively low. If the rate is very high, the pressure may approach hydrostatic pressure. It is cautioned that if the form filling rate is significantly increased later in the day, formwork pressure above a pressure transducer location will likely be higher than the pressure at the transducer. In addition, stopping and subsequently starting a pour will cause the pressure to fluctuate. Therefore, it is important to maintain relatively constant pour rates through the day.

6. REPORT

6.1 The report shall include the following:

6.1.1 The formwork rating by the manufacturer,

6.1.2 The measured pressure at various times during the pour, and

6.1.3 The peak pressure.

6.2 The report should include the form filling rate.

7. KEYWORDS

7.1 Self-consolidating concrete (SCC); formwork pressure; pressure transducer; data acquisition system; bracket; form filling rate; measured pressure; hydrostatic pressure.

[1]Test method developed by the Illinois Department of Transportation (Original Effective Date: January 1, 2008).

Appendix I

Illinois Test Procedure 307
Effective Date: April 1, 2009

Sampling and Testing of
Controlled Low-Strength Material (CLSM)

I. SAMPLING OF CLSM

Sampling freshly mixed controlled low-strength material (CLSM) shall be performed according to Illinois Modified AASHTO T 141, except the elapsed time for obtaining the composite sample shall not exceed two minutes. The flow test shall start within five minutes of obtaining the composite sample. The molding of strength test specimens shall start within ten minutes of obtaining the composite sample. The sample is to be routinely mixed during the testing process because CLSM may segregate.

II. TEMPERATURE OF CLSM

The temperature test shall be according to Illinois Modified AASHTO T 309.

III. FLOW CONSISTENCY OF CLSM

The flow test shall consist of filling a 76 mm (3 in.) inside diameter by 152 mm (6 in.) long plastic cylinder. The maximum variation from the normal inside diameter and length shall be 3 mm (1/8 in.). The plastic cylinder shall be smooth, rigid, nonabsorbent, and open at both ends. The test method shall consist of the following:

- Dampen the inside of the cylinder.
- Place the cylinder on a flat, level, firm nonabsorbent surface that is free of vibration or other disturbances.
- Hold the cylinder firmly in place and fill in one lift without vibration, rodding, or tapping.
- Strike off the top of the cylinder to form a level surface while holding the cylinder in place. Remove surplus material from around the base of the cylinder.
- Immediately raise the cylinder vertically a minimum distance of 150 mm (6 in.) in 3 ± 1 seconds without any lateral or torsional motion.
- When the material has stopped flowing, measure the maximum diameter of the resulting spread and measure the diameter perpendicular to the maximum. Each measurement shall be to the nearest 10 mm (0.5 in.). If the two measurements differ by more than 50 mm (2 in.), verify working surface to be level, and test again.
- Calculate the average of the two measured diameters and report to the nearest 5 mm (0.25 in.).

IV. AIR CONTENT OF CLSM

The air content test shall be according to Illinois Modified AASHTO T 121 or Illinois Modified AASHTO T 152, except the bowl shall be filled in one lift without vibration, rodding, or tapping.

V. COMPRESSIVE STRENGTH OF CLSM

Compressive strength test specimens shall be made and cured according to Illinois Modified AASHTO T 23, except for the following:

- The 152 mm x 305 mm (6 in. x 12 in.) cylinders shall be filled in one lift without vibration, rodding, or tapping. When bleed water appears at the top of the mold after a few minutes, the mold shall be refilled.

- The curing method shall be modified by not removing the covered specimen from the mold until the time of testing. The cylinders shall be stored in a shaded area with a controlled temperature of 16 °C to 27 °C (60 °F to 80 °F).

Compressive strength test specimens shall be tested according to Illinois Modified AASHTO T 22, except for the following:

- Neoprene caps shall be used for compressive testing, and a wire brush may be used to flatten test specimens that are not plane.

- The compression machine loading rate shall be 20 ± 10 kPa/s (3 ± 2 psi/s).

- Strength is defined as the average of two or more cylinder breaks.

- Compressive strength shall be calculated to the nearest 1.0 kPa (1.0 psi).

Appendix J

PLANT OR JOBSITE DOCUMENTATION EXAMPLE FORMAT

(**NOTE:** Record this information on inside cover of field book.)

Contractor Name: _____

Job Superintendent Name: _____

Contractor Address: _____

_____

_____

Contractor Phone Number: _____

Resident Name: _____

District Office Address: _____

_____

_____

District Office Phone Number: _____

County: _____

Section: _____

Route: _____

District: _____

Contract No.: _____

Job No.: _____

Project: _____

PLANT OR JOBSITE DOCUMENTATION EXAMPLE FORMAT

DATE: _____

WEATHER: _____

CONSTRUCTION TYPE: _____

CONSTRUCTION LOCATION: _____

CONCRETE PRODUCER AND LOCATION: _____

DEPARTMENT CONCRETE MIX DESIGN NUMBER: _____

TICKET NO.	TRUCK NO.	BATCH TIME	ARRIVAL TIME *	DISCHARGE TIME *	TRUCK MIXER REVOLUTIONS		BATCH SIZE
					INITIAL	FINAL**	
PLANT OR FIELD COMMENT:							
PLANT OR FIELD COMMENT:							
PLANT OR FIELD COMMENT							
PLANT OR FIELD COMMENT:							
PLANT OR FIELD COMMENT:							
PLANT OR FIELD COMMENT:							
PLANT OR FIELD COMMENT:							

* This information is recorded at the jobsite.
** Per specification, this information is optional.

PLANT OR JOBSITE DOCUMENTATION EXAMPLE FORMAT

NOTE FOR ADJUSTMENTS AT JOBSITE: Tests for air content and slump shall be performed before adjusting a mix. Concrete which is modified at the jobsite, after initial testing, shall be retested. Documentation for air content and slump shall clearly indicate if these tests were performed before, or after, the addition of water or admixtures. Strength specimens shall not be molded until after the addition of all water and admixtures. Concrete shall not be placed until air content and slump tests are completed. When placing concrete by pump or conveyor, indicate which tests are performed before or after transport by pump or conveyor.

STATE INSPECTOR: _____

CONTRACTOR INSPECTOR: _____

PERCENT AIR		SLUMP		CONC. TEMP.		AIR TEMP.		WATER ADDED	ADMIX. ADDED	REV'S ADDED	SERIES NUMBER/LETTER	
QC	QA	QC	QA	QC	QA	QC	QA			(Min. 40)	QC	QA
PLANT OR FIELD COMMENT:												
PLANT OR FIELD COMMENT:												
PLANT OR FIELD COMMENT:												
PLANT OR FIELD COMMENT:												
PLANT OR FIELD COMMENT:												
PLANT OR FIELD COMMENT:												
PLANT OR FIELD COMMENT:												

PLANT OR JOBSITE DOCUMENTATION EXAMPLE FORMAT

NOTE FOR ADJUSTMENTS AT JOBSITE: Tests for slump flow, VSI, J-ring, and L-box shall be performed before adjusting a self-consolidating concrete (SCC) mix. SCC which is modified at the jobsite, after initial testing, shall be retested. Documentation for slump flow, VSI, J-ring, and L-box shall clearly indicate if the tests were performed before, or after, the addition of water or admixtures. Specimens for Hardened Visual Stability Index (HVSI) test shall not be molded until after the addition of water and admixtures. Concrete shall not be placed until SCC tests are completed. When placing concrete by pump or conveyor, indicate which tests are performed before or after transport by pump or conveyor.

STATE INSPECTOR: _____

CONTRACTOR INSPECTOR: _____

SLUMP FLOW		VSI		J-RING		L-BOX		HVSI		DSI	
QC	QA	QC	QA	QC	QA	QC	QA	QC	QA	QC	QA
PLANT OR FIELD COMMENT:											
PLANT OR FIELD COMMENT:											
PLANT OR FIELD COMMENT:											
PLANT OR FIELD COMMENT:											
PLANT OR FIELD COMMENT:											
PLANT OR FIELD COMMENT:											
PLANT OR FIELD COMMENT:											

Appendix K

Illinois Department of Transportation

Concrete Air, Slump and Quantity

I.D. Number (1): _____

Inspector No. (3): _____ Date (4): _____ Sequence No (5): _____

Conc. Prod. No (6): _____ Concrete Code (7): _____ AEA (8): _____

Prod. Name (9): _____ Prod. Location (10): _____

Cement Prod (11): _____ Cement Code (12): _____ Admixture (13): _____

Responsible Loc (14): _____ Lab (15): _____ Lab Name (16): _____

Type Test (17): _____

County (2): _____
Section: _____
Route: _____
District: _____
Contract No.: _____
Job No.: _____
Project: _____
City: _____

SFX (18)	Contract Number (19)	Job Number (20)	Design Number (21)	Date Cast (22)	Location (23)	Water Gal (24)	Conc Temp (25)	Air Temp (26)	Air % (27)	Slump inches (28)	Type Const (29)	AEA oz/cwt (30)	Admix oz/cwt (31)	Qnty cuyd (32)	Series (33)	Result (34)	Load No. (35)

Sequence No. _____ I.D. Number _____

SFX	Contract Number	Job Number	Design Number	Date Cast	Location	Water Gal	Conc Temp	Air Temp	Air %	Slump inches	Type Const	AEA oz/cwt	Admix oz/cwt	Qnty cuyd	Series	Result	Load No.

Reported By (36): _____ (Printed Name and signature are required) Remarks (37): _____ Copies To (40): _____

Tester (38): _____ (Printed Name and signature are required) Agency (39): _____ C (41): _____

MISTIC INPUT
Date Entered (42): _____
Initials (43): _____

BMPR MI654 (Rev. 11/01/12) /FOR DTY03654
(Formerly MI 654)

CONCRETE AIR, SLUMP AND QUANTITY
INSTRUCTIONS
BMPR MI654

1. **I.D. NUMBER:** MISTIC test identification number. Leave blank because MISTIC will generate the test identification number.

2. **PROJECT IDENTIFICATION:** Enter the project identification.

3. **INSPECTOR NO.:** Identify the individual who took the sample. For split samples, the same inspector number should be used for both halves of the sample.

   a) IDOT personnel enter their MISTIC inspector number.

   b) Contractor, Subcontractor and Producer personnel enter a "9", followed by the District number and seven zeros (0's).
   Example: 960000000 for District 6.

   c) Consultant personnel enter their company's MISTIC inspector number.

   d) Local agency personnel enter a "9",followed by the District number, which is repeated until field is filled.
   Example: 966666666 for District 6 local agency.

4. **DATE:** Enter the date the report is prepared as month, day, and year in mmddyy format.
   Example: 103112

5. **SEQUENCE NO.:** Enter any combination of letters and/or numbers up to 6 characters in length. It is used to differentiate multiple samples of the same materials taken on the same day.

6. **CONC. PROD. NO.:** Enter the MISTIC code number for the concrete producer. Only one plant may be shown on one report. Example: 5362-05

7. **CONCRETE CODE:** Enter the MISTIC material code for the concrete mixture. Only one code number is allowed per report. The "M" in the material code signifies a metric mixture. The unit of measure for metric mixtures is cubic meters. All metric contracts should be using metric mixtures.

   Enter 21601 or 21601M for a portland cement concrete mixture.
   Enter 21605 or 21605M for a portland cement and fly ash concrete mixture.
   Enter 21606 or 21606M for a portland cement and latex concrete mixture.
   Enter 21609 or 21609M for a portland cement and microsilica concrete mixture.
   Enter 21611 or 21611M for a portland cement and ground granulated blast-furnace slag concrete mixture.
   Enter 21613 or 21613M for a portland cement and high reactivity metakaolin concrete mixture.
   Enter 21614 or 21614M for a portland cement, fly ash, and high reactivity metakaolin concrete mixture.
   Enter 21620 or 21620M for a fabric formed concrete revetment mat mixture.
   Enter 21621 or 21621M for a controlled low-strength mixture.
   Enter 21622 or 21622M for a portland cement, fly ash, and microsilica concrete mixture.
   Enter 21627 or 21627M for a portland cement, ground granulated blast-furnace slag, and microsilica concrete mixture.

Enter 21628 or 21628M for portland cement, fly ash, ground granulated blast-furnace slag, and microsilica concrete mixture.
Enter 21629 or 21629M for portland cement, ground granulated blast-furnace slag, and high reactivity metakaolin concrete mixture.
Enter 21632 for a portland blast-furnace slag cement and fly ash concrete mixture.
Enter 21633 for an insertion lining of pipe culverts grout mixture.
Enter 21634 for a portland cement pervious concrete mixture.
Enter 21635 for a portland cement and fly ash pervious concrete mixture.
Enter 21636 for a portland cement and ground granulated blast-furnace slag pervious concrete mixture.
Enter 21637 for a portland cement and Type K concrete mixture.
Enter 21638 for a portland cement, fly ash, and Type K concrete mixture.
Enter 21801 or 21801M for a cement aggregate mixture II.
Enter 21803 or 21803M for a cement aggregate mixture II with fly ash.
Enter 22106 or 22106M for a concrete mixture which uses a rapid hardening cement from the Department's Approved List of Packaged, Dry, Rapid Hardening Cementitious Materials for Concrete Repairs.
Enter 22107 or 22107M for a concrete mixture which uses calcium aluminate cement.

8. **AEA:** Air-entraining admixture. Enter the 5 digit MISTIC material code number for the air-entraining agent used. Refer to the IDOT Approved List of Concrete Admixtures.

9. **PROD. NAME:** Enter the name of the ready mix or jobsite plant.

l10. **PROD. LOCATION:** Enter the location of the ready mix or jobsite plant.

11. **CEMENT PROD.:** Enter the MISTIC code number for the plant that produced the portland cement. Refer to IDOT Approved List of Qualified Cement Plants.
Example: 4116-08

12. **CEMENT CODE:** Enter the 6 character MISTIC material code number for the type of cement used.
Only one code number is allowed per report.

Enter 37601M for Type I cement.
Enter 37603M for Type II cement.
Enter 37605M for Type III cement.
Enter 37608M for Type V cement.
Enter 37609M for Type II (MH) cement.
Enter 37701M for Type IS cement.
Enter 37703M for Type IP cement.
Enter 37901M for rapid hardening cement.
Enter 37902M for calcium aluminate cement.

13. **ADMIXTURE:** Enter, left justified, the last 3 digits of the MISTIC material code number for the admixture(s) being used. Refer to the IDOT Approved List of Concrete Admixtures. A total of 3 different admixtures may be entered. For example, if a superplasticizer, a retarder, and a corrosion inhibitor are used, the entry may read:
Example: 738758725 for Melment, Recover, and DCI.

14. **RESPONSIBLE LOC.:** Enter the District identification number as a "9" followed by the District number. Example: 96 for District 6

15. **LAB:** Enter the 2 letter MISTIC lab code.

Laboratory Locations	MISTIC Lab Codes
Producer Plant Site Laboratory	PP
Producer NonPlant Site Laboratory	PL
Producer Construction Site	PC
Independent Plant Site Laboratory	IP
Independent NonPlant Site Laboratory	IL
Independent Construction Site	IC
Independent Laboratory	IN
IDOT/Local Agency Plant Site Laboratory	FP
IDOT/Local Agency Construction Site	FC

NOTE**:** A Contractor, Subcontractor, and Producer are to use one of the "Producer" lab codes.
An IDOT Consultant, Contractor Consultant, Subcontractor Consultant, and Producer Consultant are to use one of the "Independent" lab codes.

16. **LAB NAME:** Enter the name of the company which cannot exceed 20 characters.

17. **TYPE TEST:** See below for the correct 3 letter designation. For additional information see Attachment 4 in the Project Procedures Guide.

AGENCY	QC/QA	NON QC/QA
Contractor/Producer/ Consultant	PRO	-----
IDOT/Consultant	IND (split), INV	ACC

ACC = Acceptance
IND = Independent Assurance
INV = Investigative
PRO = Process Control

18. **SFX:** Suffix. Leave blank because MISTIC will generate the MISTIC test identification number suffix.

19. **CONTRACT NUMBER:** Enter the 5 digit contract number. If it is a local agency contract without a 5 digit number, then enter the 16 or 17 character MFT (Motor Fuel Tax) contract number.

20. **JOB NUMBER:** Enter the 8 character job number that corresponds with the 5 digit contract number. If the contract number is not 5 digits, leave this field blank.

21. **DESIGN NUMBER:** Enter the 9 character mixture design number assigned by the District, for the concrete mixture being used. Example: 86PCC1234

22. **DATE CAST:** Enter the date of the pour as month, day, and year in mmddyy format.

23. **LOCATION:** Enter the location of the pour such as abutment, pier footing, sidewalk, etc. Station number may be shown. The field is 15 spaces long. For "IND" tests the sample comparison information should be entered in this field.

    For “IND” inspection, a comparison remark is required for slump and air content, because the assurance test is from a split sample. For an acceptable comparison, enter the following:

    - Enter “C” when tests compare within acceptable limits of precision.
    - Enter date of comparison.
    - Enter initials for “IND” inspector.
    - If the sample was witnessed by the “IND” inspector, indicate as “ws”.
      Note: The sample should always be witnessed.
    - Example: C - 100197 TCS ws.

    For an unacceptable comparison, enter the following:

    - Enter “X” when tests do not compare within acceptable limits of precision.
    - Enter date of comparison.
    - Enter initials for “IND” inspector.
    - If the sample was witnessed by the “IND” inspector, indicate as “ws”.
      Note: The sample should always be witnessed.
    - Explain reason for unacceptable comparison under “Remarks”.
    - Examples are: Contractor obtained sample incorrectly; IDOT equipment required repair; Contractor performed test method incorrectly; Problem was not identified, will investigate further if problem continues.
    - Example: X - 100297 TCS ws Contractor performed test method incorrectly.

24. **WATER:** Enter the total liters of water per cubic meter (gallons per cubic yard) of concrete. This includes mixing water, free moisture in the aggregates and water added at the jobsite. The quantity must be between 0.0 and 999.9 liters (gallons).
    (Note: Water in admixtures and water used to rinse the discharge opening of a truck mixer should be included, if significant. Refer to Section 5.6 “Water-Cement Control” of the PCC Level II Technician Course manual for additional information.)

25. **CONC. TEMP.:** Enter the concrete temperature. It must be between 0.0 and 99.9 degrees Celsius (Fahrenheit).

26. **AIR TEMP.:** Enter the air temperature. It must be between 0.0 and 999.9 degrees Celsius (Fahrenheit).

27. **AIR %:** Enter all final results of air tests. It must be between 0.0 and 99.9 percent.

28. **SLUMP:** Enter all the final results of slump tests. It must be between 0.0 and 999.99 millimeters. Round to the nearest 5 mm (1/4 inch).

29. **TYPE CONST.:** Enter the 2 letter code for the type of construction.

MISTIC Code	Construction Type
01	PCC Base Course
02	PCC Base Course Widening
03	PCC Curb
04	PCC Gutter
05	PCC Combination Curb & Gutter
06	PCC Step Curb & Gutter
07	PCC Hub Guard & Gutter
08	PCC Paved Ditch
09	PCC Median
10	PCC Pavement
11	CRCP Pavement
12	PCC Railroad Crossing
13	PCC Sidewalk
14	PCC Slope Wall
15	Structures*
16	Bridge Deck
17	Pavement Patching
18	Bridge Deck Patching
19	Precast Deck Slab
20	Precast Prestressed Beams
21	Headwalls
22	Handrail
23	Seal Coat
24	Precast Piling
25	Precast Prestressed Piling
26	Pneumatic Concrete (Shotcrete)
27	Bridge Deck Concrete Overlay
28	Latex Concrete
29	PCC Shoulders
30	Sub-base
31	Incidental
32	CLSM for Backfill

* This item includes foundations such as drilled shafts, repairs such as formed concrete repair, bridge approach slab, and the “bridge approach footing” beneath the bridge approach slab.

30. **AEA:** Air-entraining admixture. Enter the dosage of the air-entraining admixture used. It must be between 0.0 and 9999.9 ml/100 kg (oz./cwt) of cement and finely divided minerals. (Note: The completion of this field is a District option. Consultants need to verify with the District on the need to complete this field.)

31. **ADMIX:** Admixtures. Enter the dosage of any other admixture used. Must be between 0.0 and 9999.9 ml/100 kg (oz./cwt) of cement. If more than one admixture is used, the total combined dosage is entered in this field. The individual dosages can be written in the remarks.
(Note: The completion of this field is a District option. Consultants need to verify with the District on the need to complete this field.)

32. **QNTY.:** Enter the total quantity of the day's pour on the first test of the day. Round up to a whole cubic meter (cubic yard).

33. **SERIES:** Enter the 6 letter and/or number combination, assigned to the beam or cylinder series.
Example: 1P-A = Contractor 762 mm (30 in.) beam to be broken at 7 days.
1P-B = Contractor 762 mm (30 in.) beam to be broken at 14 days.
1P-C = IDOT 762 mm (30 in.) beam to be broken at 14 days.
Enter as “1P”, and not as “1P-A”, “1P-B”, and “1P-C”. If the A, B, C letter designation is included, MISTIC would interpret this as 3 series instead of 1 series with 3 beams. The beams are differentiated by age in BMPR MI655.
(NOTE: Use same series designation for BMPR MI655.)

34. **RESULT:** Enter "APPR" for approved tests, "FAIL" for failures and "INVL" for invalid tests. All failures must have remarks detailing the action taken to address the failure. For example, retest, checked equipment, test method incorrect, will monitor.

35. **LOAD NUMBER:** Enter the load number that applies to the tests.

36. **REPORTED BY:** Print the name of the individual who completed the report. The individual's signature is also required.

37. **REMARKS:** Enter any remark that pertains to the report.

38. **TESTER:** Enter the name of the individual(s) who performed the slump and air content tests.

39. **AGENCY:** Enter the tester's employer.

40. **COPIES TO:** Enter the distribution of this report. QC/QA - The original goes to the District Materials Engineer. A copy goes to the Resident Engineer and the file copy goes to the QC Manager. Non-QC/QA - Same as above except that the file copy stays with the tester or the individual who completed the report.

41. **C:** MISTIC convert flag for English data. If the data on the form is in English units, then mark "Y" and the MISTIC system will convert it to metric values (except for quantity). If the data on the form is in metric units, then leave blank. All test data that is stored in MISTIC must be metric.

42. **DATE ENTERED:** Leave blank. IDOT will enter the date the results are entered into MISTIC as month, day, and year in mmddyy format.

43. **INITIALS:** Leave blank. IDOT will enter the initials of the person entering the test results into MISTIC.

Illinois Department of Transportation

P.C. Concrete Strengths

I.D. Number (1): _____

Inspector No (3): _____ Date Reported (4): _____ Sequence No (5): _____

Type Insp (6): _____ Total Samples (7): 01

Prod. No (8): _____ Prod. Name (9): _____

Matl. Code (10): _____ Name (11): _____ Desc. _____ Copy (13): _____

Resp. Loc (14): _____ Lab (15): _____ Lab Name (16): _____ Compl. Date (17): _____ Test Results (18): _____

Remarks (19): _____

Assign (20): Y Contract (21): _____ Job No (22): _____

County (2): _____
Section: _____
Route: _____
District: _____
Contract No: _____
Job No. _____
Project: _____
City: _____

Trans: 655

Design (23):	Type Const. (24):	Date Cast (25):	Series (26):	Type C or F (27):	Days or Hours (28):	Age (29):	Strength psi (30):	Strength psi (31):	Average psi (32):	Age (33):	Strength psi (34):	Strength psi (35):	Average psi (36):
Remarks (37):													
Remarks													
Remarks													
Remarks													
Remarks													
Remarks													
Remarks													
Remarks													

Reported By (38): _____ Remarks (39): _____ Copies To (40): _____
(Printed Name and signature are required)

Tester (41): _____ Agency (42): _____ C (43): _____
(Printed Name and signature are required)

/FOR DTY03000

MISTIC INPUT
Date Entered (44): _____
Initials (45): _____

BMPR MI655 (Rev. 11/01/12)
(Formerly MI655)

Printed 11/9/2012

P. C. CONCRETE STRENGTHS
INSTRUCTIONS
BMPR MI655

1. **I.D. NUMBER:** MISTIC test identification number. Leave blank because MISTIC will generate the test identification number.

2. **PROJECT IDENTIFICATION:** Enter the project information.

3. **INSPECTOR NO.:** Identify the individual who took the sample. For split samples, the same inspector number should be used for both halves of the sample. If another individual made the beams or cylinders, enter this information in Item 19.

   a) IDOT personnel enter the MISTIC inspector number.

   b) Contractor, Subcontractor and Producer personnel enter a "9", followed by the District number and seven zeros (0's).
   Example: 960000000 for District 6.

   c) Consultant personnel enter their company's MISTIC inspector number

   d) Local agency personnel enter a "9" followed by the District number, which is repeated until field is filled.
   Example: 966666666 for District 6 local agency.

4. **DATE REPORTED:** Enter the date the report was prepared as month, day, and year in mmddyy format. Example: 103112

5. **SEQUENCE NO.:** Enter any combination of letters and/or numbers up to 6 characters in length. It is used to differentiate multiple samples of the same materials taken on the same day.

6. **TYPE INSP.:** See below for the correct 3 letter designation. For additional information see Attachment 4 in the Project Procedures Guide.

AGENCY	QC/QA	NON QC/QA
Contractor/Producer/ Consultant	PRO	-----
IDOT/Consultant	IND (split), INV	PRO, IND

IND = Independent Assurance
INV = Investigative
PRO = Process Control

7. **TOTAL SAMPLES:** Pre-printed on the form with a "01".

8. **PROD. NO.:** Enter the MISTIC code number for the concrete producer. Only one plant may be shown on one report. Example: 5362-05

9. **PROD. NAME:** Enter the name of ready mix or jobsite plant.

10. **MATL. CODE:** Enter the MISTIC material code for the concrete mixture. Only one code number is allowed per report. The "M" in the material code signifies a metric mixture. The unit of measure for metric mixtures is cubic meters. All metric contracts should use metric mixtures.

    Enter 21601 or 21601M for a portland cement concrete mixture.
    Enter 21605 or 21605M for a portland cement and fly ash concrete mixture.
    Enter 21606 or 21606M for a portland cement and latex concrete mixture.
    Enter 21609 or 21609M for a portland cement and microsilica concrete mixture.
    Enter 21611 or 21611M for a portland cement and ground granulated blast-furnace slag concrete mixture.
    Enter 21613 or 21613M for a portland cement and high reactivity metakaolin concrete mixture.
    Enter 21614 or 21614M for a portland cement, fly ash, and high reactivity metakaolin concrete mixture.
    Enter 21620 or 21620 M for a fabric formed concrete revetment mat mixture.
    Enter 21621 or 21621M for a controlled low-strength mixture.
    Enter 21622 or 21622M for a portland cement, fly ash and microsilica concrete mixture.
    Enter 21627 or 21627M for a portland cement, ground granulated blast-furnace slag, and microsilica concrete mixture.
    Enter 21629 or 21629M for portland cement, ground granulated blast-furnace slag, and high reactivity metakaolin concrete mixture.
    Enter 21632 for a portland blast-furnace slag cement and fly ash concrete mixture.
    Enter 21633 for an insertion lining of pipe culverts grout mixture.
    Enter 21634 for a portland cement pervious concrete mixture.
    Enter 21635 for a portland cement and fly ash pervious concrete mixture.
    Enter 21636 for a portland cement and ground granulated blast-furnace slag pervious concrete mixture.
    Enter 21637 for a portland cement and Type K concrete mixture.
    Enter 21638 for a portland cement, fly ash, and Type K concrete mixture.
    Enter 21801 or 21801M for a cement aggregate mixture II.
    Enter 21803 or 21803M for a cement aggregate mixture II with fly ash.
    Enter 22106 or 22106M for a concrete mixture which uses a rapid hardening cement from the Department's Approved List of Packaged, Dry, Rapid Hardening Cementitious Materials for Concrete Repairs.
    Enter 22107 or 22107M for a concrete mixture which uses calcium aluminate cement.

11. **NAME:** Enter the name of the concrete mixture, which corresponds with the material code.

12. **DESC. 1:** Leave blank.

13. **COPY:** Leave blank.

14. **RESP. LOC.:** Enter the District identification number as a "9" followed by the District number. Example: 96 for District 6

15. **LAB:** Enter the 2 letter MISTIC lab code.

Laboratory Locations	MISTIC Lab Codes
Producer Plant Site Laboratory	PP
Producer NonPlant Site Laboratory	PL
Producer Construction Site	PC
Independent Plant Site Laboratory	IP
Independent NonPlant Site Laboratory	IL
Independent Construction Site	IC
Independent Laboratory	IN
IDOT/Local Agency Plant Site Laboratory	FP
IDOT/Local Agency Construction Site	FC

NOTE**:** A Contractor, Subcontractor, and Producer are to use one of the "Producer" lab codes.
An IDOT Consultant, Contractor Consultant, Subcontractor Consultant, and Producer Consultant are to use one of the "Independent" lab codes.

16. **LAB NAME:** Enter the name of the company which cannot exceed 20 characters.

17. **COMPL. DATE:** Complete date. Enter the most recent date the beams or cylinders were tested, from all tests on the report. Enter the date as month, day, and year in mmddyy format.

18. **TEST RESULTS:** Use "COMP" to indicate completed tests.

19. **REMARKS:** Enter any remark that pertains to the report.

20. **ASSIGN:** Pre-printed on form with a "Y".

21. **CONTRACT:** Enter the 5 digit contract number. If it is a local agency contract without a 5 digit number, then enter the 16 or 17 character MFT (Motor Fuel Tax) contract number.

22. **JOB NO.:** Enter the 8 character job number that corresponds with the 5 digit contract number. If the contract number is not 5 digits, leave this field blank.

23. **DESIGN:** Enter the 9 character mixture design number assigned by the District, for the concrete mixture being tested. Example: 86PCC1234

24. **TYPE CONST.:** Enter the 2 letter code for the type of construction.

MISTIC Code	Construction Type
01	PCC Base Course
02	PCC Base Course Widening
03	PCC Curb
04	PCC Gutter
05	PCC Combination Curb & Gutter
06	PCC Step Curb & Gutter
07	PCC Hub Guard & Gutter
08	PCC Paved Ditch
09	PCC Median
10	PCC Pavement
11	CRCP Pavement
12	PCC Railroad Crossing
13	PCC Sidewalk
14	PCC Slope Wall
15	Structures*
16	Bridge Deck
17	Pavement Patching
18	Bridge Deck Patching
19	Precast Deck Slab
20	Precast Prestressed Beams
21	Headwalls
22	Handrail
23	Seal Coat
24	Precast Piling
25	Precast Prestressed Piling
26	Pneumatic Concrete (Shotcrete)
27	Bridge Deck Concrete Overlay
28	Latex Concrete
29	PCC Shoulders
30	Sub-base
31	Incidental
32	CLSM for Backfill

* This item includes foundations such as drilled shafts, repairs such as formed concrete repair, bridge approach slab, and the “bridge approach footing” beneath the bridge approach slab.

25. **DATE CAST:** Enter the date the beams or cylinders were made as month, day, and year in mmddyy format.

26. **SERIES:** Enter the 6 letter and /or number combination, assigned to the beam or cylinder series.
Example: 1P-A = Contractor 762 mm (30 in.) beam to be broken at 7 days.
1P-B = Contractor 762 mm (30 in.) beam to be broken at 14 days.
1P-C = IDOT 762 mm (30 in.) beam to be broken at 14 days.
Enter as "1P" and not as "1P-A", "1P-B" and '1P-C". If the A, B and C letter designation is included, MISTIC would interpret this as 3 series instead of 1 series with 3 beams. The beams are differentiated by age in BMPR MI655.
(NOTE: Use same series designation for BMPR MI654.)

27. **TYPE C or F:** Enter "F" for flexural strength (Beam) or "C" for compressive strength (cylinder).

28. **DAYS OR HOURS:** Enter "D" if the beam/cylinder age to break is in days or "H" if the age is in hours. The age designation is applicable to Items 29 and 33.

29. **AGE:** At time of test, indicate the age of first 762 mm (30 in.) beam, or first set of cylinders/beams. The age must be between 0 and 99.

30. **STRENGTH:** Enter the compressive or flexural strength for the first cylinder or beam tested, or for the first break on a 762 mm (30 in.) beam; at the age indicated in Item 29. The strength must be between 0 and 999999 kPa (psi).

31. **STRENGTH:** Enter the compressive or flexural strength for the second cylinder or beam tested, or for the second break on a 762 mm (30 in.) beam; at the age indicated in Item 29. The strength must be between 0 and 999999 kPa (psi).
(NOTE: If the second break is not performed at that same age as Item 29, omit Items 31 and 32 and enter under Items 33 and 34, on the same line.)

32. **AVERAGE:** Enter the average strength of the two breaks (Item 30 and 31).

33. **AGE:** At time of test, indicate the age of second 762 mm (30 in.) beam, or second set of cylinders/beams. The age must be between 0 and 99. (NOTE: The beam or cylinder must correspond with Item 26.)

34. **STRENGTH:** Enter the compressive or flexural strength for the first cylinder or beam tested, or for the first break on a 762 mm (30 in.) beam; at the age indicated in Item 33. The strength must be between 0 and 999999 kPa (psi).

35. **STRENGTH:** Enter the compressive or flexural strength for the second cylinder or beam tested, or for the second break on a 762 mm (30 in.) beam; at the age indicated in Item 33. The strength must be between 0 to 999999 kPa (psi).

36. **AVERAGE:** Enter the average strength of the two breaks (Items 34 and 35).

37. **REMARKS:** Enter any remark that pertains to the set of beams/cylinders. For "IND" tests the sample comparison information is entered in this field.

For "IND" inspection, a comparison remark is required, because the assurance test is from a split sample. For an acceptable comparison, enter the following:

- Enter "C" when tests compare within acceptable limits of precision.
- Enter date of comparison.

- Enter initials for “IND” inspector.
- If the sample was witnessed by the “IND” inspector, indicate as “ws”.
  NOTE: The sample should always be witnessed.
- Example: C - 100197 JLK ws.

For an unacceptable comparison, enter the following:

- Enter “X” when tests do not compare within acceptable limits of precision.
- Enter date of comparison.
- Enter initials for “IND” inspector.
- If the sample was witnessed by the “IND” inspector, indicate as “ws”.
  NOTE: The sample should always be witnessed.
- Explain reason for unacceptable comparison.
- Examples are: Contractor obtained sample incorrectly; IDOT equipment required repair; Contractor performed test method incorrectly; Problem was not identified, will investigate further if problem continues.
- Example: X - 100297 JLK ws Contractor performed test method incorrectly.

38. **REPORTED BY:** Print the name of the individual who completed the report. The individual’s signature is also required.

39. **REMARKS:** Enter any remark that pertains to the report.

40. **COPIES TO:** Enter the distribution of this report. QC/QA - The original goes to the District Materials Engineer. A copy goes to Resident Engineer and the file copy goes to the QC Manager. Non-QC/QA - Same as above except that the file copy stays with the tester or the individual who completed the report.

41. **TESTER:** Print the name of the individual who tested the cylinders or beams. The individual’s signature is also required.

42. **AGENCY:** Enter the tester’s employer.

43. **C:** MISTIC convert flag for English data. If the data on the form is in English units, then mark "Y" and the MISTIC system will convert it to metric values (except for quantity). If the data on the form is in metric units, then leave blank. All test data that is stored in MISTIC must be metric.

44. **DATE ENTERED:** Leave blank. IDOT will enter the date the results are entered into MISTIC as month, day, and year in mmddyy format.

45. **INITIALS:** Leave blank. IDOT will enter the initials of the person entering the test results into MISTIC.

Appendix L

ILLINOIS DEPARTMENT OF TRANSPORTATION

MODEL QUALITY CONTROL PLAN FOR CONCRETE PRODUCTION

Effective: December 1, 1993
Revised: June 1, 2012

INSTRUCTIONS: The Contractor shall respond to all items addressed in this model. This is applicable to work performed by the Contractor or subcontractor(s). Examples are provided to assist the Contractor, and any innovations to the quality control process may be presented.

Part 1 is completed by the Contractor.

Part 2 is completed by the Contractor or Commercial Concrete Producer. For the Contractor, Part 2 is submitted annually, for the period which begins April 1st, and which expires the following year on March 31st. For a Commercial Concrete Producer, Part 2 shall remain in effect until the Producer submits an updated document or the District requests the Producer to update Part 2. (Note: A District may require Part 2 to be updated annually or at a longer interval.)

If Part 2 is approved by the Department's District office for a one year period, the Contractor shall either attach the approved Part 2 to each Quality Control Plan submitted, or shall state "The approved Part 2, for the period from mo/day/yr to mo/day/yr, is on file at the District office; the contents are fully and thoroughly understood, and the contents are a part of this Contract." When Part 2 has been completed by the Commercial Concrete Producer, the Contractor shall not make any revisions. However, the Contractor and Commercial Concrete Producer have the option to amend Part 2 for a specific project, and submit it to the Department's District office for approval.

QUALITY CONTROL PLAN
CONCRETE

County: _____
Section: _____
Route: _____
District: _____
Contract No.: _____
Job No.: _____
Project: _____
Contractor: _____
P.O. Box: _____
Street Address: _____
City/State/Zip Code: _____
Telephone No.: _____
Fax No.: _____

CONTRACTOR RESPONSIBILITIES

This Quality Control plan explains how _____ proposes to control the equipment, materials, and production methods to ensure the specified product is obtained.

PART 1 - QUALITY CONTROL PLAN AT THE JOBSITE

I. FIELD OFFICE

Location: _____

Contact Person: _____

Telephone Number: _____

In the event of field equipment failure, _____ will provide back up equipment.

II. FIELD QUALITY CONTROL PERSONNEL

Individual's Name: _____

Department Training: _____

Company Name: _____

Telephone Number: _____

_____ Primary or _____ Back Up

The Level II PCC Technician who will be responsible for plant mixture control and adjustments is indicated in Part 2.

_____ is the Level I PCC Technician who will be responsible for jobsite mixture control and adjustments.

_____ is the Quality Control Manager who will be responsible for overall project quality control.

III. FIELD SAMPLING AND TESTING

INSTRUCTIONS: Indicate whether beams and/or cylinders will be cast, as well as how the specimens will be initially cured.

Note: In some instances, such as Articles 503.05 and 503.06, only a flexural strength is specified. An equivalent compressive strength may be used if approved by the Engineer.

Example:

Plastic cylinder molds [6 by 12 in. (152 by 305 mm)] will be used to cast strength specimens. The plastic cylinder mold will be covered with a plastic cylinder lid. A curing box will be used to maintain the specimens within 60 to 80° F (16 to 27° C). The specimens will be transported after 24 hours for standard curing.

INSTRUCTIONS: Indicate the final location for standard curing and testing of the strength specimens, and the method of curing.

Example:

The strength specimens will be transported to the consultant's lab for standard curing in a water storage tank, and testing.

IV. FAILING TESTS AND DEFECTIVE WORK

INSTRUCTIONS: Indicate the communication procedures between the Commercial Concrete Producer, the Contractor, and Department personnel in the event of failing tests or observation of defective work. This may also be in flow chart form.

Example:

In the event of failing tests or observation of defective work at the jobsite, the Level I PCC Technician will be responsible for notifying the Superintendent and the Quality Control Manager. The Superintendent will be responsible for notifying the Resident Engineer.

In the event of failing tests at the plant, the Level II PCC Technician will be responsible for notifying the Superintendent and the Quality Control Manager. The Superintendent will be responsible for notifying the Resident Engineer.

V. COMMUNICATION

INSTRUCTIONS: For concurrent pours, indicate how each Concrete Tester will be able to contact the Level I PCC Technician.

Indicate how jobsite personnel will be able to contact the Level II PCC Technician.

Example:

For concurrent pours, each Concrete Tester will be able to contact the Level I PCC Technician by two-way radio. Jobsite personnel will use two-way radio to contact the Level II PCC Technician, when he/she is at the plant. When the Level II PCC Technician is not at the plant, jobsite personnel and the Level II PCC Technician will use a cellular phone.

VI. FIELD DOCUMENTATION

INSTRUCTIONS: Indicate the forms, the bound hardback field books, and bound hardback diaries that will be used to maintain documentation at the jobsite.

Example:

A bound hardback field book will be used for all documentation at the jobsite.

VII. PRE-POUR MEETING

INSTRUCTIONS: Indicate when a bridge deck pre-pour meeting will be scheduled. Meetings for other important pours are encouraged.

Examples:

A meeting will be scheduled the day before the bridge deck pour to discuss mix, concrete delivery, pumped concrete, finishing equipment and requirements, labor, deficiencies, curing, weather conditions (i.e. temperature, humidity, wind), and other pertinent issues.

Or

A meeting will be scheduled two months, two weeks, and two days before the bridge deck pour. The meetings will discuss mix, concrete delivery, pumped concrete, finishing equipment and requirements, labor, deficiencies, curing, weather conditions (i.e. temperature, humidity, wind), and other pertinent issues.

PART 2 - QUALITY CONTROL PLAN AT THE CONCRETE PLANT

If applicable:

Department Producer/Supplier Number: _____

Commercial Concrete Producer:_____

P.O. Box:_____

Street Address:_____

City/State/Zip Code: _____

Telephone Number:_____

I. MATERIALS

INSTRUCTIONS: The wording for "A) Aggregates" is provided for the Contractor. Indicate the material sources for "B) Coarse Aggregates" and "C) Fine Aggregates". If applicable, attach proposed mix plant gradation bands in accordance with the Department's "Development of Gradation Bands on Incoming Aggregate at Mix Plants."

A) Aggregates

Certified aggregate gradation bands (including master band, if required) will be obtained from the aggregate source for all certified aggregates, prior to any shipment of material to the plant.

B) Coarse Aggregates

Material: (Example: CA 11 - Crushed Stone)

ASTM C 1260 Expansion: _____ (This is not required for limestone or dolomite aggregate.)

Department Producer/Supplier Number: _____

Company Name: _____

Company Address: _____

Contact Person: _____

Telephone Number: _____

C) Fine Aggregates

Material: (Example: FA 01 - Natural Sand)

ASTM C 1260 Expansion: _____ (This is not required for limestone or dolomite aggregate.)

Department Producer/Supplier Number: _____

Company Name: _____

Company Address: _____

Contact Person: _____

Telephone Number: _____

D) Aggregate Stockpiling and Handling

INSTRUCTIONS: Aggregates shall be stockpiled and handled in a manner which minimizes segregation and degradation, prevents contamination, and produces a uniform gradation, before placement in the plant bins. This is according to Articles 106.06, 106.07, 1003.01 (e), 1004.01 (e), 1004.02 (d), and 1020.10, of the Standard Specifications for Road and Bridge Construction (January 1, 2012). Indicate the specific methods to be used.

Example:

Coarse aggregates are shipped by rail to the plant, in a uniform gradation condition. Upon delivery of the coarse aggregate, it will be transferred to a stockpile by a movable conveyor system. The stockpile will be built according to Article 1004.01 (e), of the Standard Specifications for Road and Bridge Construction (January 1, 2012).

Fine aggregates are shipped by truck to the plant, in a uniform gradation condition. The fine aggregate will be truck dumped into a stockpile. The truck stockpile will be built according to Article 1003.01 (e) of the Standard Specifications for Road and Bridge Construction (January 1, 2012).

All stockpiles will be separated with concrete block walls, sufficient in width, length, and height to prevent contamination. The maximum height of the walls will be ___ ft (___ m).

E) Uniform Aggregate Moisture

INSTRUCTIONS: According to Article 1020.10 of the Standard Specifications for Road and Bridge Construction (January 1, 2012), aggregates shall have a uniform moisture content before placement in the plant bins. Indicate the specific methods to be used.

Example:

Coarse and fine aggregates will be stockpiled and allowed to drain for 12 hours, before placement in the plant bins. However, during hot weather, the aggregate stockpiles will be periodically sprinkled with water.

F) Coarse Aggregate Moisture

INSTRUCTIONS: Indicate the frequency of coarse aggregate moisture testing to control production.

NOTE: Fine aggregate moisture testing is specified in the Special Provision for Quality Control/Quality Assurance of Concrete Mixtures.

G) Aggregate Gradation Samples

INSTRUCTIONS: Indicate how and where you will sample aggregates to assure they will meet current Department gradation specifications.

Example:

For aggregates arriving at the plant, truck-dump sampling will be performed for fine and coarse aggregate gradation tests.

For aggregates used during concrete production, on-belt sampling will be performed for fine and coarse aggregate gradation tests. The conveyor belt beneath the bin will be used.

H) Gradation Tests for Aggregates Arriving at the Plant

INSTRUCTIONS: Indicate the frequency of gradation testing for aggregates arriving at the plant, **to check the source**.

NOTE: The frequency of gradation testing **to check the production of concrete**, for aggregates stored at the plant in stockpiles or bins, is specified in the Special Provision for Quality Control/Quality Assurance of Concrete Mixtures.

II. PLANT AND DELIVERY TRUCKS

Plant Name: _____

Plant Location: _____

Producer No.: _____

NOTE: The plant and delivery trucks are to be approved according to the Bureau of Material and Physical Research's Policy Memorandum, "Approval of Concrete Plants and Delivery Trucks." Contact the Department's District office to obtain the required forms.

III. QUALITY CONTROL LABORATORY

Location: _____

Contact Person: _____

Telephone Number: _____

The quality control laboratory is ____ sq. ft. [The Department suggests 200 ft² (20 m²)].

The laboratory was approved on _____ by District _____.

In the event of lab equipment failure, _____ will provide back up equipment.

IV. PLANT QUALITY CONTROL PERSONNEL

Individual's Name: _____

Department Training: _____

Company Name: _____

Telephone Number: _____

_____ Primary or _____ Back Up

NOTE: Include personnel who have been trained by the Level II PCC Technician to sample and test aggregate for moisture.

_____ is the Level II PCC Technician who will be responsible for plant mixture control and adjustments.

The Level I PCC Technician who will be responsible for jobsite mixture control and adjustments is indicated in Part 1.

The Quality Control Manager who will be responsible for overall project quality control is indicated in Part 1.

V. MIX DESIGNS

INSTRUCTIONS: Provide mix design information as stated in 1.1 "Volumetric Mix Design and Mix Design Submittal" of the Portland Cement Concrete Level III Technician Course – Manual of Instructions for Design of Concrete Mixtures.

Otherwise state: "Only mix designs previously verified by the Department will be used".

INSTRUCTIONS: Based on the ASTM C 1260 test information provided for the aggregates, indicate the mixture option selected for minimizing the risk of alkali-silica reaction. Refer to Article 1020.05(d).

VI. PLANT MIXTURE TESTING

INSTRUCTIONS: Indicate the plant start-up testing frequency, and the plant testing frequency thereafter, to control production. This is required for slump, air content, unit weight, yield, and temperature tests performed at the plant. Indicate any other tests that will be performed.

NOTE: Plant start-up situations are defined in the "Portland Cement Concrete Level II Technician Course" manual. Indicate if the manual's plant start-up situations will be applicable, or if other start-up situations will apply.

VII. PLANT SUPERVISION

INSTRUCTIONS: If the Level II will supervise more than one plant, indicate his/her attendance at the various plants for large or critical pours.

VIII. COMMUNICATION

INSTRUCTIONS: Indicate how plant personnel will be able to contact the Level II PCC Technician, when he/she is not at the plant.

Example:

Plant personnel will use a land phone, to contact the Level II PCC Technician by cellular phone.

IX. PLANT DOCUMENTATION

INSTRUCTIONS: Indicate the forms, the bound hardback field books, and bound hardback diaries that will be used to maintain documentation at the plant, and at the laboratory.

Example:

A loose-leaf binder will be used to maintain any Department form which is required at the plant, or at the laboratory. A bound hardback field book will be used to record test results at the plant, and at the laboratory. A bound hardback diary will be used to document observations, inspections, adjustments to the mix design, and corrective actions at the plant.

INSTRUCTIONS:

To be completed by Contractor. Return with Quality Control Plan.

QUALITY CONTROL PLAN SIGNATURE SHEET

(IF AN INDIVIDUAL)

Firm Name _____

Print Name of Owner _____

Signature of Owner _____

Date:_____

(IF A CO-PARTNERSHIP)

Firm Name _____

Print Name of Partner _____

Signature of Partner _____

Date:_____

(IF A CORPORATION)

Corporate Name _____

Print Name of Authorized Representative _____

Signature of Authorized Representative _____

Date:_____

(ALL)

Business Address:_____

P.O. Box:_____

Street Address:_____

City/State/Zip Code:_____

INSTRUCTIONS: The Contractor shall complete this section for Addendums to a Quality Control Plan.

QUALITY CONTROL PLAN ADDENDUM
CONCRETE

County: _____

Section: _____

Route: _____

District: _____

Contract No.: _____

Job No.: _____

Project: _____

Contractor: _____

P.O. Box: _____

Street Address: _____

City/State/Zip Code: _____

Telephone No.: _____

Fax No.: _____

ADDENDUMS

INSTRUCTIONS: Indicate and/or attach addendums to Contractor Quality Control Plan.

INSTRUCTIONS:

To be completed by Contractor. Return with any amended Quality Control Plan.

QUALITY CONTROL PLAN ADDENDUM SIGNATURE SHEET

(IF AN INDIVIDUAL)

Firm Name _____

Print Name of Owner _____

Signature of Owner _____

Date:_____

(IF A CO-PARTNERSHIP)

Firm Name _____

Print Name of Partner _____

Signature of Partner _____

Date:_____

(IF A CORPORATION)

Corporate Name _____

Print Name of Authorized Representative _____

Signature of Authorized Representative _____

Date:_____

(ALL)

Business Address:_____

P.O. Box:_____

Street Address:_____

City/State/Zip Code:_____

Appendix M

State of Illinois
Department of Transportation
Bureau of Materials and Physical Research
POLICY MEMORANDUM
Springfield

Revised: October 15, 2012	20-08.1
This Policy Memorandum supersedes number 20-08.0 dated January 1, 2008	

TO: REGIONAL ENGINEERS AND HIGHWAY BUREAU CHIEFS

SUBJECT: FIELD TEST PROCEDURES FOR MIXER PERFORMANCE AND CONCRETE UNIFORMITY TESTS

I. SCOPE

These methods describe the procedures for obtaining and testing representative samples of fresh concrete in the field to determine the consistency and mixer efficiency of stationary mixers at different mixing time periods.

The concrete produced during the mixing time investigation and not used in the test program may be incorporated in the project provided it conforms with the Standard Specifications for Road and Bridge Construction.

As specified in Article 1020.11(c) a maximum of two mixing times will be considered by the Department. The Contractor shall provide all of the necessary equipment and personnel to perform the tests, and the Department will observe the testing.

II. EQUIPMENT

The following equipment shall be provided by the Contractor.

a. Three (3) air meters according to Illinois Modified AASHTO T 152.
b. Three (3) slump cone kits according to Illinois Modified AASHTO T 119.
c. One (1) No. 4 sieve with a minimum screen area of 0.19 m² (2 sq. ft.) according to AASHTO M 92.
d. One (1) unit weight weighing equipment according to Illinois Specification 101, “Minimum Requirements for Electronic Balances”.
e. Flexural strength molds according to Illinois Modified AASHTO T 23, or compressive strength molds according to Illinois Modified AASHTO T 23.
f. Strength testing apparatus according to Illinois Modified AASHTO T 22 or T 177.
g. Curing equipment according to Illinois Modified AASHTO T 23.
h. Small tools such as shovels, scoops, buckets, etc., and water shall be furnished as required.

III. PROCEDURE

For an initial request, a minimum of ten (10) batches per drum shall be tested and evaluated for each original reduced mixing time. If the initial request is for a twin drum mixer, ten (10) batches shall be tested for the first drum and three (3) for the second drum.

Subsequent verification or a check test, consisting of three (3) batches, shall be required if the mixer is moved, major maintenance is performed (such as replacement of the mixer blades), the source/type/gradation of aggregate has changed, the batching sequence/procedure is altered, or twelve (12) months have elapsed between an initial or subsequent verification. For a twin drum mixer, a check test consisting of three (3) batches shall be performed on each drum. The Engineer reserves the right to request a check test if concrete build up or mixer blade wear is determined to be a concern because of use.

a. Mixing.

The mixing time and batch size to be evaluated shall be proposed by the Contractor. A tolerance of two (2) seconds will be permitted for the mixing time.

If approved by Engineer, minor adjustments in admixture dosage and water content will be allowed to account for weather conditions, provided that the maximum w/c ratio is not exceeded.

In the event of a plant malfunction, the Engineer will determine the need for a new batch.

b. Sampling.

At the conclusion of the mixing cycle, the mixer shall be discharged and appropriate samples obtained from the first, middle, and last third portions of the batch. Samples shall be obtained according to Illinois Modified AASHTO T 141.

As an alternate, the mixer may be stopped, and the samples removed by any suitable means at equally spaced points from the front to the back of the drum.

c. Testing.

1. Each third portion of the batch shall be tested simultaneously. The Contractor shall provide sufficient personnel to meet this requirement. The Contractor personnel performing the testing shall be Level I PCC Technicians or Concrete Testers. However, a Level I PCC Technician shall be provided to supervise the Concrete Tester.

2. From each third portion of the batch the mass (weight) of the concrete in one air meter measuring bowl shall be determined.

3. The air content of each third portion of the batch shall be determined according to Illinois Modified AASHTO T 152. The air content shall be the arithmetic average of two (2) tests from each third portion of the batch.

4. The target slump will be determined by the Engineer, but shall be a maximum 63 mm (2.5 in.). The slump of each third portion of the batch shall be determined according to Illinois Modified AASHTO T 119. The slump shall be the arithmetic average of two (2) tests from each third portion of the batch.

5. Flexural strength specimen(s) (two (2) breaks required) or two (2) compressive strength specimens shall be prepared from each third portion of the batch according to Illinois Modified AASHTO T 23. Flexural strength specimen(s) (two (2) breaks required) shall be tested according to Illinois Modified AASHTO T 177 at seven (7) days of age. Compressive strength specimens shall be tested according to Illinois Modified AASHTO T 22 at seven (7) days of age.

6. The contents from the weighed air meter measuring bowl (Step 2) shall be washed over a No. 4 sieve. Shake as much water as possible from the material retained on the sieve and then weigh the material The coarse aggregate content (portion of mass (weight) of sample retained on a No. 4 sieve), expressed as a percent, shall be calculated

7. After the required number of batches have been mixed and tested at the proposed mixing time, the mixing time shall revert back to the minimum time allowed without mixer performance testing, as specified in Article 1020.11(c).

IV. CONCRETE UNIFORMITY REQUIREMENTS

a. Test results from each third portion of the batch shall be compared to one another according to TABLE 1. Each batch shall be evaluated individually.

b. Mixer performance tests consisting of ten (10) batches: If more than seven (7) tests out of the total or more than three (3) in any one criteria are not in compliance with the uniformity requirements (air content, slump, coarse aggregate content, and strength), a reduced mixing time will not be granted.

c. Mixer performance tests consisting of three (3) batches: If more than three (3) tests out of the total are not in compliance with the uniformity requirements, a full ten (10) batch investigation shall be required.

TABLE 1 - REQUIREMENTS FOR UNIFORMITY OF CONCRETE	
Test	Requirement (Note 1)
Air Content, percent by volume of concrete	1.0 (Note 2)
Slump, mm (inch)	25 (1.0) (Note 3)
Coarse aggregate content, portion by mass (weight) of each sample retained on the No. 4 sieve, percent	6.0
Average flexural or compressive strength at 7 days for each sample based on average strength of all comparative test specimens, percent	7.5 (Note 4)

Note 1. Expressed as maximum permissible difference in results of tests of samples taken from three locations in the concrete batch.

Note 2. The average air content sample shall be the arithmetic average of two (2) tests.

Note 3. The average slump sample shall be the arithmetic average of two (2) tests.

Note 4. The average flexural strength of each sample shall be the arithmetic average of two (2) beam breaks. The average compressive strength of each sample shall be the arithmetic average of two (2) cylinder breaks.

V. REPORT

Send copies of the report to the Bureau of Materials and Physical Research, District Materials office and the Resident Engineer/ Technician if applicable.

David L. Lippert

David L. Lippert, P.E.
Engineer of Materials
and Physical Research

Attachments

MSW/dkt

The following pages include a three batch example report and a blank ten batch report. A version of the spreadsheet with calculations following this Policy Memorandum is available to be downloaded from the IDOT web page.

MIXER PERFORMANCE TESTS

Plant Name	W.S Babbitt	Serial Number	123-456	County	Sangamon
Mixer Capacity	9 cy	Capacity Checked	9 cy	Section	(14-3,3-1)RS-2
Mixer Make	Erie	Mixing Time Checked	60 sec.	Route	I-55
Contractor	Doland & Sons	Approved Mixing Time	75 sec.	District	6
Mix Design Used	86PCC1234	Date	09/30/2002	Contract Number	94270
		Drum RPM	20	Job Number	C-97-062-94
				Project	IM-57-3(133)94

Batch No.	Test No.	Slump (in)	Average	Total Var.(in)	Air (%)	Average	Total Var. (%)	Conc. Wt.	Plus #4 Wt.	CA %	Total Var. (%)	Strength (psi)	Avg. psi	Tot. Avg.	% of Average	Total Var. from Average	Maximum Var. from Average
1	1	2.50	2.38	0.25	4.9	4.70	0.60	30.62	16.56	54.08	3.33	3890	3899	3961	98.4	1.6	5.2
		2.25			4.5							3908					
	2	2.50	2.50		5.4	5.30		30.69	17.62	57.41		3749	3820		96.4	3.6	
		2.50			5.2							3890					
	3	2.75	2.63		5.0	5.15		30.50	17.31	56.75		3908	4165		105.2	5.2	
		2.50			5.3							4421					
2	1	2.50	2.63	0.12	4.2	4.10	1.10	31.00	16.50	53.23	2.22	3378	3466	3578	96.9	3.1	4.3
		2.75			4.0							3554					
	2	2.75	2.63		5.0	4.85		30.87	16.87	54.65		3554	3731		104.3	4.3	
		2.50			4.7							3908					
	3	2.75	2.75		5.4	5.20		31.00	17.19	55.45		3537	3537		98.9	1.1	
		2.75			5.0							3537					
3	1	2.00	1.88	0.25	7.8	7.65	0.55	30.12	16.94	56.24	1.76	3908	3820	3840	99.5	0.5	1.3
		1.75			7.5							3731					
	2	1.75	1.75		6.9	7.15		30.50	17.69	58.00		3890	3890		101.3	1.3	
		1.75			7.4							3890					
	3	1.50	1.63		7.2	7.10		30.31	17.12	56.48		3890	3811		99.2	0.8	
		1.75			7.0							3731					
4	1																
	2																
	3																
5	1																
	2																
	3																

MIXER PERFORMANCE TESTS

Plant Name _____
Mixer Capacity _____
Mixer Make _____
Contractor _____
Mix Design Used _____

Serial Number _____
Capacity Checked _____
Mixing Time Checked _____
Approved Mixing Time _____
Date _____
Drum RPM _____

County _____
Section _____
Route _____
District _____
Contract Number _____
Job Number _____
Project _____

Batch No.	Test No.	Slump (in)	Average	Total Var.(in)	Air (%)	Average	Total Var. (%)	Conc. Wt.	Plus #4 Wt.	CA %	Total Var. (%)	Strength (psi)	Avg. psi	Tot. Avg.	% of Average	Total Var. from Average	Maximum Var. from Average
1	1																
	2																
	3																
2	1																
	2																
	3																
3	1																
	2																
	3																
4	1																
	2																
	3																
5	1																
	2																
	3																

MIXER PERFORMANCE TESTS

Plant Name _____
Mixer Capacity _____
Mixer Make _____
Contractor _____
Mix Design Used _____

Serial Number _____
Capacity Checked _____
Mixing Time Checked _____
Approved Mixing Time _____
Date _____
Drum RPM _____

County _____
Section _____
Route _____
District _____
Contract Number _____
Job Number _____
Project _____

Batch No.	Test No.	Slump (in)	Average	Total Var.(in)	Air (%)	Average	Total Var. (%)	Conc. Wt.	Plus #4 Wt.	CA %	Total Var. (%)	Strength (psi)	Avg. psi	Tot. Avg.	% of Average	Total Var. from Average	Maximum Var. from Average
6	1																
	2																
	3																
7	1																
	2																
	3																
8	1																
	2																
	3																
9	1																
	2																
	3																
10	1																
	2																
	3																

This Page Reserved

Appendix N

ILLINOIS TEST PROCEDURE 255

TOTAL EVAPORABLE MOISTURE CONTENT OF AGGREGATE BY DRYING

Effective Date: June 1, 2012

1 SCOPE

1.1 This test procedure covers the determination of the percentage of evaporable moisture in a sample of aggregate by drying both surface moisture and moisture in the pores of the aggregate. Some aggregate may contain water that is chemically combined with the minerals in the aggregate. Such water is not evaporable and is not included in the percentage determined by this test method. Aggregate moisture content may be run on a gradation sample prior to gradation testing or on a separate test sample.

1.2 The values stated in SI units are to be regarded as the standard. The values in parentheses are provided for information only.

1.3 This standard does not purport to address all of the safety concerns, if any, associated with its use. It is the responsibility of the user of this procedure to establish appropriate safety and health practices and determine the applicability of regulatory limitations prior to use.

2 REFERENCED DOCUMENTS

2.1 Illinois Test Procedures (ITP):

- ITP 2, Sampling of Aggregates
- ITP 84, Specific Gravity and Absorption of Fine Aggregate
- ITP 85, Specific Gravity and Absorption of Coarse Aggregate
- ITP 248, Reducing Samples of Aggregate to Testing Size

2.2 Illinois Specifications:

- Illinois Specification 201, Aggregate Gradation Samples Size Table

2.3 AASHTO Standards:

- M 231, Weighing Devices Used in the Testing of Materials

2.4 ASTM Standards:

- C 125, Standard Terminology Relating to Concrete and Concrete Aggregates
- E 29 (Illinois Modified), Using Significant Digits in Test Data to Determine Conformance with Specifications

3 TERMINOLOGY

3.1 Definitions:

3.2 For definitions of terms used in this test method, refer to ASTM C 125.

4 SIGNIFICANCE AND USE

4.1 This test method is sufficiently accurate for usual purposes such as adjusting batch quantities of ingredients for concrete. It will generally measure the moisture in the test sample more reliably than the sample can be made to represent the aggregate supply. In rare cases where aggregate itself is altered by heat, or where more refined measurement is required, the test should be conducted using a ventilated, controlled-temperature oven.

4.2 Large particles of coarse aggregate, especially those larger than 50mm (2 in.), will require greater time for the moisture to travel from the interior of the particle to the surface. The user of this test method should determine by trial if rapid drying methods provide sufficient accuracy for the intended use when drying large-size particles.

5 APPARATUS

5.1 *Balance* – The balance shall have sufficient capacity, be readable to 0.1 percent of the sample mass, or better, and conform to the requirements of AASHTO M 231.

5.2 *Source of Heat* – A ventilated oven capable of maintaining the temperature surrounding the sample at 110±5˚C (230±9˚F). The oven shall be specifically designed for drying.

5.2.1 Where close control of the temperature is not required (see Section 4.1), other suitable sources of heat may be used such as an electric or gas hot plate, electric heat lamps, or a ventilated microwave oven. A microwave oven or an electric or gas hot plate may be used only when drying a non-gradation test sample.

5.3 *Sample Container* – A container not affected by the heat, and of sufficient volume to contain the sample without danger of spilling, and of such shape that the depth of sample will not exceed one-fifth of the least lateral dimension.

Note 1 – Except for testing large samples, an ordinary frying pan is suitable for use with a hot plate, or any shallow flat-bottomed metal pan.

5.4 *Stirrer* – A metal spoon or spatula of convenient size.

6 SAMPLE

6.1 Sampling shall generally be accomplished in accordance with ITP 2, except the sample size may be as stated in Table 1.

Table 1 – Sample Size for Aggregate

Nominal Maximum Size of Aggregate, mm (in.)[1]	Mass of Normal Weight Aggregate Sample, Min., kg[2] (lb)
4.75 (0.187) (No. 4)	0.5 (1.1)
9.5 (3/8)	1.5 (3.3)
12.5 (1/2)	2 (4.4)
19.0 (3/4)	3 (6.6)
25.0 (1)	4 (8.8)
37.5 (1 ½)	6 (13.2)
50 (2)	8 (17.6)
63 (2 ½)	10 (22)
75 (3)	13 (28.7)
90 (3 ½)	16 (35.3)
100 (4)	25 (55.1)
150 (6)	50 (110.2)

[1]Based on sieves meeting M 92.
[2]Determine the minimum sample mass for lightweight aggregate by multiplying the value listed by the dry-loose unit mass of the aggregate in kg/m³ (determined using T 19M/T 19) and dividing by 1600.

6.2 Field samples of aggregate shall be reduced to test sample size before testing according to ITP 248.

Test sample size for non-gradation samples shall meet the minimum test sample size in Table 1.

Test samples having a gradation and moisture content test performed shall meet the minimum requirements of Illinois Specification 201.

Test samples shall be stored in sealable, non-absorbing bags or containers prior to determining mass to start the test.

7 PROCEDURE

7.1 The test sample shall have its mass determined to the nearest 1 gram for coarse aggregate and to the nearest 0.1 gram for fine aggregate. This procedure provides the “Original Sample Mass, g” (OSM).

7.2 The test sample shall be dried back to constant mass by the selected source of heat as specified herein.

7.2.1 ***Caution*** – When using a microwave oven, occasionally minerals are present in aggregates that may cause material to overheat and explode. If this occurs, it can damage the microwave oven. When a gas burner or electric hot plate is used for drying, the technician shall continually attend the sample. The gas burner or electric hot plate should be operated on a low-as-needed heat to prevent popping, crackling, and/or sizzling noise from the aggregate during drying. If these noises occur, the heat must be turned down and/or the sample must be constantly stirred during drying to prevent potential aggregate particle breakdown.

7.3 Constant mass is defined as the sample at which there has not been more than a 0.5-gram mass loss during a 1 hour of drying. This should be verified occasionally.

After the test sample has been dried to constant mass, the test sample shall have its mass determined as soon as the pan or container can safely be handled to prevent additional moisture from being pulled from the air into the aggregate structure.

7.4 Determine the mass of the test sample to the nearest 1 gram for coarse aggregate and to the nearest 0.1 gram for fine aggregate.

This procedure provides the "Total Dry Mass, g" (TDM). The TDM will also be used for calculation of gradation samples.

8 CALCULATION

8.1 The "Aggregate Moisture Content" shall be determined by using the following formula:

$$P = 100(OSM - TDM) / TDM$$

where:

P = Aggregate Moisture Content (%)
OSM = Original Sample Mass, g.

and:

TDM = Dried Sample Mass g.

Results shall be reported as required and in the appropriate plant diary.

Test results shall be rounded to the nearest 0.1 percent. All rounding shall be according to ASTM E 29 (Illinois Modified)

8.2 Surface moisture content is equal to the difference between the total evaporable moisture content and the absorption, with all values based on the mass of a dry sample. Absorption may be determined in accordance with ITP 85, Test for Specific Gravity and Absorption of Coarse Aggregate, or ITP 84, Test for Specific Gravity and Absorption of Fine Aggregate.

9 PRECISION AND BIAS

9.1 Precision:

9.1.2 The within-laboratory single operator standard deviation for moisture content of aggregates has been found to be 0.28 percent. Therefore, results of two properly conducted tests by the same operator in the same laboratory on the same type of aggregate sample should not differ by more than 0.79 percent from each other.

9.1.2 The between-laboratory standard deviation for moisture content of aggregates has been found to be 0.28 percent. Therefore, results of properly conducted tests from two laboratories on the same aggregate sample should not differ by more than 0.79 percent from each other.

9.1.3 Test data used to derive the above precision indices were obtained from samples dried to a constant mass in a drying oven maintained at 110±5˚C. When other drying procedures are used, the precision of the results may be significantly different than that indicated above.

Illinois Test Procedure 301
Effective Date: March 1, 2005

Fine Aggregate Moisture Content
by the Flask Method

Reference Test Procedure(s):

1. Illinois Specification 101, Minimum Requirements for Electronic Balances

2. AASHTO M 231, Weighing Devices Used in the Testing of Materials

3. AASHTO T 2 (Illinois Modified), Sampling of Aggregates

4. AASHTO T 84 (Illinois Modified), Specific Gravity and Absorption of Fine Aggregate

5. AASHTO T 248 (Illinois Modified), Reducing Field Samples of Aggregate to Testing Size

6. ASTM E 29 (Illinois Modified), Standard Practice for Using Significant Digits in Test Data to Determine Conformance with Specifications

To maintain brevity in the text, the following will apply:
Example: AASHTO T 2 (Illinois Modified) will be designated as "T 2."
ASTM E 29 (Illinois Modified) will be designated as "ASTM E 29."

A. FINE AGGREGATE MOISTURE CONTENT

1. GENERAL

This Illinois Test procedure was developed to replace AASHTO T 142, "Surface Moisture in Fine Aggregate," which AASHTO discontinued. The equivalent ASTM designation is C 70. The test is a convenient procedure for field determination of **free moisture** (surface moisture) of fine aggregate, if specific gravity values are known.

The accuracy of the test procedure depends upon accurate information on the bulk specific gravity of the material in a saturated surface-dry condition.

All rounding shall be according to ASTM E 29.

2. EQUIPMENT

a. Balance – The balance or scale shall conform to M 231 and Illinois Specification 101.

b. Flask – A suitable container or flask, preferably of glass or non-corrosive metal. The container may be a pycnometer, volumetric flask, graduated volumetric flask, or other suitable measuring device. The volume of the container shall be from two to three times the loose volume of the test sample. The container shall be so designed that it can be filled to the mark, or the volume of its contents read, within 0.5 ml or less.

3. PROCEDURE

Select a representative sample of the fine aggregate to be tested for free moisture content. The sample shall be obtained according to T 2 and T 248. Protect the sample from moisture loss until weighing. The test sample shall have a minimum mass of 200 grams. However, larger test samples will yield more accurate results. If a Chapman Flask is used, as described in Section 5, then a 500 gram test sample shall be required.

The free moisture content may be determined either by mass or by volume. In each case, the test shall be performed at a temperature range of 18 to 29 °C (65 to 85 °F).

a. Determination by Mass—Determine the mass of the container filled with water to the known volume mark. Before placing the test sample into the container, reduce the water level to prevent the water from going over the mark when the test sample is added. Introduce the test sample into the container, and remove entrapped air. Refill the container to the mark, and determine the mass of the container and test sample. Calculate the amount of water displaced by the test sample as follows:

$V_S = W_C + W_S - W$

Where: V_S = Mass of Water Displaced by the Test Sample, nearest 1 gram.

W_C = Mass of Container Filled to the Mark with Water, nearest 1 gram.

W_S = Mass of Aggregate Sample, nearest 1 gram.

W = Mass of Container, Aggregate Sample, and Water Filled to the Mark, nearest 1 gram.

b. Determination by Volume—Measure a volume of water (ml) sufficient to cover the test sample, and place in the container. Introduce the test sample into the container, and remove entrapped air.

When a graduated flask is used, determine the combined volume of the test sample and the water by direct reading. When a pycnometer or volumetric flask of known volume is used, fill the container to the known volume mark with an additional measured volume of water. The flask or pycnometer volume is then equal to the combined volume of the test sample and water. Calculate the amount of water displaced by the test sample as follows:

$V_S = V_2 - V_1$

Where: V_S = Volume of Water Displaced by the Test Sample, nearest 1 ml.

V_2 = Combined Volume of the Test Sample and Water, nearest 1 ml.

V_1 = Total Volume of Water in the Container Required to Cover the Test Sample and Bring the Level up to the Known Volume Mark, nearest 1 ml.

Note: 1 ml of water has the mass of 1 gram.

4. CALCULATION

a. Percentage of Free Moisture in Terms of Saturated Surface-Dry Aggregate

$$P = [(V_S - V_D) - (W_S - V_S)] \times 100$$

Where:

P = Free Moisture in Terms of Saturated Surface-Dry Fine Aggregate, nearest 0.1 percent.

V_S = Mass of Water Displaced, nearest 1 gram.

V_D = Mass of Test Sample, nearest 1 gram, Divided by the Bulk Specific Gravity of the Fine Aggregate in a Saturated Surface-Dry Condition, nearest 0.01, Determined According to T 84.

W_S = Mass of Test Sample, nearest 1 gram.

b. Percentage of Free Moisture in Terms of Dry Aggregate with Known Absorption

$$P_D = P \times (1 + \frac{P_A}{100})$$

Where:

P_D = Free Moisture in Terms of Dry Fine Aggregate, nearest 0.1 percent.

P = Free Moisture in Terms of Saturated Surface-Dry Fine Aggregate, nearest 0.1 percent.

P_A = Absorption of the Fine Aggregate, nearest 0.1 percent, Determined According to T 84.

Total moisture content, on a dry aggregate basis, is the sum of the free moisture, P_D, and the absorption, P_A.

5. FINE AGGREGATE MOISTURE CONTENT BY THE FLASK METHOD

The Chapman Flask is graduated as discussed in Section 3b. The Chapman Flask can be used to determine the percent of free moisture (surface moisture) of fine aggregate.

For example, assume a fine aggregate with a known saturated surface-dry specific gravity (G_S) of 2.62. The Chapman Flask is filled with water to the 200 ml line, which is located between the two bulbs of the flask. A 500 gram test sample of fine aggregate is then poured into the flask, and agitated to remove any entrapped air. The flask is then placed on a level surface, and the water level is read on the neck of the flask. For this example, assume a final reading (V) of 400 ml. The percent free moisture, P, is calculated to the nearest 0.1 percent as follows:

$$P = \left(\frac{V - 200 - \frac{500}{G_S}}{700 - V} \right) \times 100$$

$$P = \left(\frac{400 - 200 - \frac{500}{2.62}}{700 - 400} \right) \times 100$$

P = 3.1 percent

The percent of free moisture can also be determined from the following tables using the above formula. Using the values from the previous example, enter the table at the final reading from the flask (e.g. V = 400 ml), read horizontally to the specific gravity column desired (e.g. G_S = 2.62), and read the percent moisture directly as 3.1 percent.

FORMULA USED: PERCENT FREE MOISTURE, P = $\left(\dfrac{V - 200 - \dfrac{500}{G_S}}{700 - V} \right) \times 100$

PERCENT FREE MOISTURE, P: CHAPMAN FLASK METHOD FOR 500 GRAM TEST SAMPLE

READING FROM FLASK	G_S 2.70	G_S 2.69	G_S 2.68	G_S 2.67	G_S 2.66	G_S 2.65	G_S 2.64	G_S 2.63	G_S 2.62	G_S 2.61	G_S 2.60	G_S 2.59	G_S 2.58
391	1.9	1.7	1.4	1.2	1.0	0.8	0.5	0.3	0.1	0.0	0.0	0.0	0.0
392	2.2	2.0	1.8	1.5	1.3	1.1	0.8	0.6	0.4	0.1	0.0	0.0	0.0
393	2.5	2.3	2.1	1.9	1.6	1.4	1.2	0.9	0.7	0.5	0.2	0.0	0.0
394	2.9	2.7	2.4	2.2	2.0	1.7	1.5	1.3	1.0	0.8	0.6	0.3	0.0
395	3.2	3.0	2.8	2.5	2.3	2.1	1.8	1.6	1.4	1.1	0.9	0.6	0.4
396	3.6	3.3	3.1	2.9	2.6	2.4	2.2	1.9	1.7	1.5	1.2	1.0	0.7
397	3.9	3.7	3.4	3.2	3.0	2.7	2.5	2.3	2.0	1.8	1.5	1.3	1.1
398	4.2	4.0	3.8	3.5	3.3	3.1	2.8	2.6	2.4	2.1	1.9	1.6	1.4
399	4.6	4.4	4.1	3.9	3.7	3.4	3.2	3.0	2.7	2.5	2.2	2.0	1.7
400	4.9	4.7	4.5	4.2	4.0	3.8	3.3	3.3	3.1	2.8	2.6	2.3	2.1
401	5.3	5.1	4.8	4.6	4.4	4.1	3.7	3.7	3.4	3.2	2.9	2.7	2.4
402	5.6	5.4	5.2	4.9	4.7	4.5	4.0	4.0	3.7	3.5	3.3	3.0	2.8

FORMULA USED: PERCENT FREE MOISTURE, P = $\left(\dfrac{V - 200 - \dfrac{500}{G_S}}{700 - V} \right) \times 100$

PERCENT FREE MOISTURE, P: CHAPMAN FLASK METHOD FOR 500 GRAM TEST SAMPLE

READING FROM FLASK	G_S 2.70	G_S 2.69	G_S 2.68	G_S 2.67	G_S 2.66	G_S 2.65	G_S 2.64	G_S 2.63	G_S 2.62	G_S 2.61	G_S 2.60	G_S 2.59	G_S 2.58
403	6.0	5.8	5.5	5.3	5.1	4.8	4.6	4.3	4.1	3.8	3.6	3.4	3.1
404	6.4	6.1	5.9	5.7	5.4	5.0	4.9	4.7	4.4	4.2	4.0	3.7	3.5
405	6.7	6.5	6.2	6.0	5.8	5.5	5.3	5.1	4.8	4.6	4.3	4.1	3.8
406	7.1	6.8	6.6	6.4	6.1	5.9	5.6	5.4	5.2	4.9	4.7	4.4	4.1
407	7.4	7.2	7.0	6.7	6.5	6.3	6.0	5.8	5.5	5.3	5.0	4.8	4.5
408	7.8	7.6	7.3	7.1	6.9	6.6	6.4	6.1	5.9	5.6	5.4	5.1	4.9
409	8.2	7.9	7.7	7.5	7.2	7.0	6.7	6.5	6.2	6.0	5.7	5.5	5.2
410	8.6	8.3	8.1	7.8	7.6	7.4	7.1	6.9	6.6	6.4	6.1	5.8	5.6
411	8.9	8.7	8.4	8.2	8.0	7.7	7.5	7.2	7.0	6.7	6.5	6.2	6.0
412	9.3	9.1	8.8	8.6	8.3	8.1	7.8	7.6	7.3	7.1	6.8	6.6	6.3
413	9.7	9.4	9.2	9.0	8.7	8.5	8.2	8.0	7.7	7.5	7.2	7.0	6.7
414										7.8	7.6	7.3	7.1

Illinois Test Procedure 302
Effective Date: April 1, 2008

Aggregate Specific Gravity and Moisture Content by the Dunagan Method

Reference Test Procedure(s):

1. Illinois Specification 101, Minimum Requirements for Electronic Balances

2. AASHTO M 231, Weighing Devices Used in the Testing of Materials

3. AASHTO T 2 (Illinois Modified), Sampling of Aggregates

4. AASHTO T 84 (Illinois Modified), Specific Gravity and Absorption of Fine Aggregate

5. AASHTO T 85 (Illinois Modified), Specific Gravity and Absorption of Coarse Aggregate

6. AASHTO T 248 (Illinois Modified), Reducing Field Samples of Aggregate to Testing Size

7. ASTM E 29 (Illinois Modified), Standard Practice for Using Significant Digits in Test Data to Determine Conformance with Specifications

To maintain brevity in the text, the following will apply:
Example: AASHTO T 2 (Illinois Modified) will be designated as “T 2.”
ASTM E 29 (Illinois Modified) will be designated as “ASTM E 29.”

A. SPECIFIC GRAVITY – DUNAGAN METHOD

1. GENERAL

The specific gravity is determined, as specified by the Department, according to T 84 and T 85.

The Dunagan apparatus (specific gravity and moisture determinator) developed by Professor W.M. Dunagan is used as a convenient method for checking the specific gravity and moisture content of aggregate in the field.

All rounding shall be according to ASTM E 29.

2. EQUIPMENT

The Dunagan apparatus is a specially designed balance for determining an aggregate sample’s mass in water and in air. As an alternative to acquiring a Dunagan apparatus kit, a homemade Dunagan apparatus can be assembled by acquiring the following equipment:

a. Electronic Balance – The electronic balance shall conform to M 231 and Illinois Specification 101. The electronic balance shall have a weight below hook.

b. Tank – The tank shall be made of non-corrosive material, and shall have an overflow spout. The tank shall be of sufficient size for the pail. The pail shall not touch the bottom or sides of the tank when submerged in the water held by the tank.

c. Pail – The pail shall be made of non-corrosive material, and shall be of sufficient size to hold the aggregate sample.

d. Stand – The stand shall be able to support the weighing operation. To allow for the balance's weigh below hook, a hole is required in the center of the stand. The stand shall have sufficient height to easily remove the submerged pail from the tank.

3. PROCEDURE FOR MASS OF AGGREGATE SAMPLE IN WATER

- Dunagan Apparatus Kit

  The equipment is set up as illustrated in Figure 1. Fill tank "A" with water up to the overflow spout "B". The empty pail "C" is immersed in water and suspended from the balance. Place a clean, dry scoop "D" on the right hand scale pan and adjust the scales to balance. To perform the initial balance, it may be necessary to add washers on the left hanger "E" to act as counterweights. Thereafter, the final adjustment may be performed with the calibration screw on the balance.

  Remove the pail from the tank. Partially fill the pail with water taken from the tank, and slowly pour the sample into the pail. Pouring the sample into the water will prevent the entrapping of air with the sample. The submerged sample shall be stirred to dislodge entrapped air. If material clings to the inside of the scoop, place the scoop in the mouth of the pail and rinse with the water. Then slowly immerse the pail obliquely into the tank, allowing water to flow slowly over one side of the pail. This immersion should be done carefully to prevent materiel from washing out of the pail. Suspend the pail from the end of the left hanger. If necessary, add water to the tank to bring the water level up to the overflow spout. Permit any excess water to overflow. Obtain the immersed mass, by placing weights in the scoop and adjusting the rider.

- Homemade Dunagan Apparatus

  Fill the tank with water up to the overflow spout. The empty pail is immersed in water, and suspended from the end of the electronic balance weigh below hook. Tare the electronic balance.

  Remove the pail from the tank. Partially fill the pail with water taken from the tank, and slowly pour the sample into the pail. Pouring the sample into the water will prevent the entrapping of air with the sample. The submerged sample shall be stirred to dislodge entrapped air. If material clings to the inside of the scoop, place the scoop in the mouth of the pail and rinse with the water. Then slowly immerse the pail obliquely into the tank, allowing water to flow slowly over one side of the pail. This immersion should be done carefully to prevent material from washing out of the pail. Suspend the pail from the end of the electronic balance weigh below hook. If necessary, add water to the tank to bring the water level up to the overflow spout. Permit any excess water to overflow. Obtain the immersed mass.

4. PROCEDURE FOR MASS OF AGGREGATE SAMPLE IN AIR

- Dunagan Apparatus Kit – Whole Number Kilograms

  The Dunagan apparatus can be used to measure samples in whole number kilograms. This is convenient when the specified sample size is 1, 2, or 3 kilograms, as in Sections A.5., A.6., B.2., and B.3. The equipment is set up as illustrated in Figure 1. Adjust the scales to balance evenly as explained in the first paragraph of Section A.3 "Dunagan Apparatus Kit." Place the slotted kilogram weights on the left hanger, and pour enough material into the scoop to balance the scales.

- Dunagan Apparatus Kit – Fractional Kilograms

  The Dunagan apparatus can be converted to a balance which measures samples in fractional kilograms, such as 1.5 kilograms. This is convenient if an electronic balance is not required by specifications; or if the slotted kilogram weights discussed in "Dunagan Apparatus Kit – Whole Number Kilograms" are not available.

  The equipment is set up as illustrated in Figure 2. Be advised that the pans are not interchangeable, and should be marked "L" and "S" respectively. "L" designates the pan for the long stirrup, and "S" is the pan which has been balanced for the short stirrup.

  Place a clean, dry scoop "D" on the left hand scale pan and adjust the scales to balance evenly. To perform the initial balance, it may be necessary to use a counterweight constructed from a can and shot. Thereafter, the final adjustment may be performed with the calibration screw on the balance.

  Place the sample in the scoop. Determine the sample mass by placing weights in the short stirrup pan, and adjusting the rider. The scale can measure to the nearest 0.1 gram.

- Homemade Dunagan Apparatus

  Determine the sample mass by weighing on top of the electronic balance.

5. COARSE AGGREGATE SPECIFIC GRAVITY

The specific gravity of saturated surface-dry coarse aggregate is determined as follows:

- Select a representative sample of the coarse aggregate to be tested. The sample shall be obtained according to T 2 and T 248.

- Measure approximately 3,000 grams of coarse aggregate sample per Section A.4. Soak the sample in water for 24 hours. Surface-dry the sample to a saturated condition according to T 85.

- Measure a 2,000 gram test sample per Section A.4.

- Determine the mass of the immersed test sample to the nearest 1 gram per Section A.3. This mass will be designated "W" for the test sample.

- Calculate the saturated surface-dry specific gravity of the coarse aggregate as follows:

$$G_S = \frac{2000}{2000 - W}$$

Or per Figure 3, which is the simpler method to use. To determine G_S from Figure 3:

- Start at a point which corresponds to the immersed mass (submerged weight) "W" of the test sample.

- Project this point horizontally until it intersects the vertical line of zero free moisture, and determine the specific gravity, G_S, by interpolation, to the nearest 0.01.

As an example: Suppose "W" for a 2,000 gram test sample is 1,230 grams. Projecting this point horizontally to intersect the line of zero free moisture, it is found that G_S is approximately 2.60.

6. FINE AGGREGATE SPECIFIC GRAVITY

To determine the specific gravity of saturated surface-dry fine aggregate, the test is identical to coarse aggregate, except as follows:

- After soaking, spread a sample of 2,300 grams or more on a flat surface, and air dry until the surface moisture has evaporated. Do not heat the sample to speed the process. The saturated surface-dry condition is reached when the material will roll freely from a scoop or trowel without sticking.

- Measure a 1,000 gram test sample per Section A.4.

- Calculate the saturated surface-dry specific gravity of the fine aggregate as follows:

$$G_S = \frac{1000}{1000 - W}$$

Or per Figure 3, which is the simpler method to use.

B. MOISTURE CONTENT DETERMINATION – DUNAGAN METHOD

1. GENERAL

The test for free moisture or absorption is based upon a given sample of material (not in the saturated surface-dry condition) which will measure, when immersed in water, less or more than a sample of the same mass of material in the saturated surface-dry condition. This depends upon whether it contains free moisture or will absorb moisture.

For conducting this test, the equipment is set up as illustrated in Figure 1.

All rounding shall be according to ASTM E 29.

2. COARSE AGGEGATE MOISTURE CONTENT

To determine the free moisture or absorption of a sample of coarse aggregate, the test is conducted in the following manner:

- Select a representative sample of the coarse aggregate to be tested. The sample shall be obtained according to T 2 and T 248. Protect the sample from moisture loss until weighing.

- Measure a 2,000 gram test sample, as per Section A.4.

- Determine the mass of the immersed test sample to the nearest 1 gram. The immersed mass is obtained as per Section A.3., except the test sample shall remain in the pail for 10 minutes. This mass will be designated "W_1" for the test sample.

- If "W_1" is less than the "W" determined per Section A.5, the aggregate contains free moisture; if "W_1" is greater than "W," the aggregate will absorb moisture. The percentage of free moisture or absorption is determined by one of the following formulae:

Free Moisture (percent) $$= \frac{0.05G_S \times (W - W_1)}{G_S - 1}$$

Absorption (percent) $$= \frac{0.05G_S \times (W - W_1)}{0.8G_S - 1}$$

NOTE: G_S is the saturated surface-dry specific gravity of the coarse aggregate.

The factor, 0.8, is based on the assumption that the sample will become 80% saturated in 10 minutes.

The simpler method is to use Figure 3 and the immersed mass (submerged weight) "W_1." To determine the moisture content from Figure 3:

- Start at a point which corresponds to the immersed mass (submerged weight) "W_1" of the test sample.

- Project this point horizontally, until it intersects the line corresponding to the specific gravity of the aggregate, G_S.

- Project this point of intersection vertically and read the percentage of free moisture or absorption from the scale, at the bottom of the chart to the nearest 0.1. The value is interpolated.

As an example: Suppose G_S for the test sample is 2.56, and "W_1" is 1,170 grams. The vertical projection of the point of intersection of the line (representing these values) shows a free moisture content of approximately 4.0 percent.

3. FINE AGGREGATE MOISTURE CONTENT

To determine the free moisture or absorption of fine aggregate the test is identical to coarse aggregate. However, measure a 1,000 gram test sample and use one of the following formulae:

Free Moisture (percent) = $\frac{0.1G_S \times (W - W_1)}{G_S - 1}$

Absorption (percent) = $\frac{0.1G_S \times (W - W_1)}{0.8G_S - 1}$

NOTE: G_S is the saturated surface-dry specific gravity of the fine aggregate.

Again, the simpler method is to use Figure 3 for a 1,000 gram test sample.

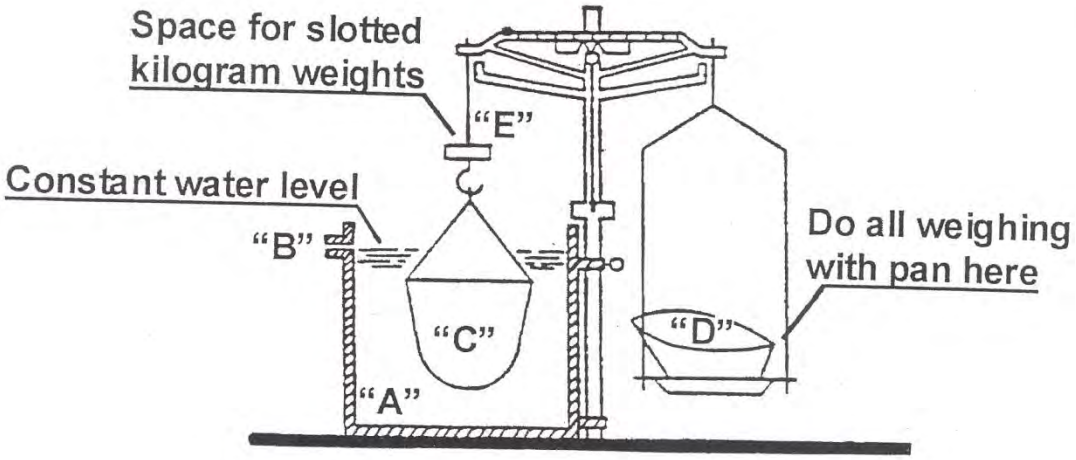

FIGURE 1

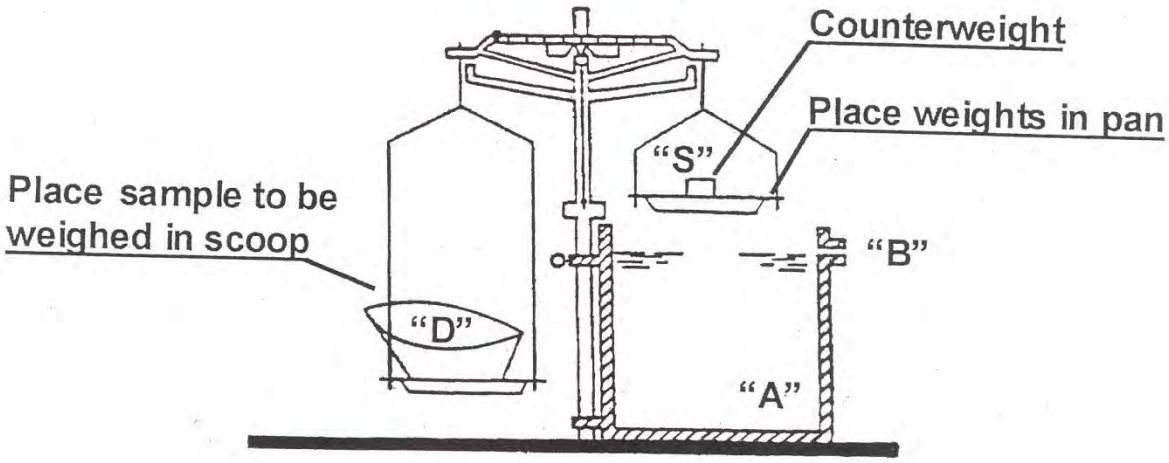

FIGURE 2

Figure 3
Chart for Determining Specific Gravity and Free Moisture or Absorption for either 1000 or 2000 Gram Samples Tested in the Specific Gravity and Moisture Determinator

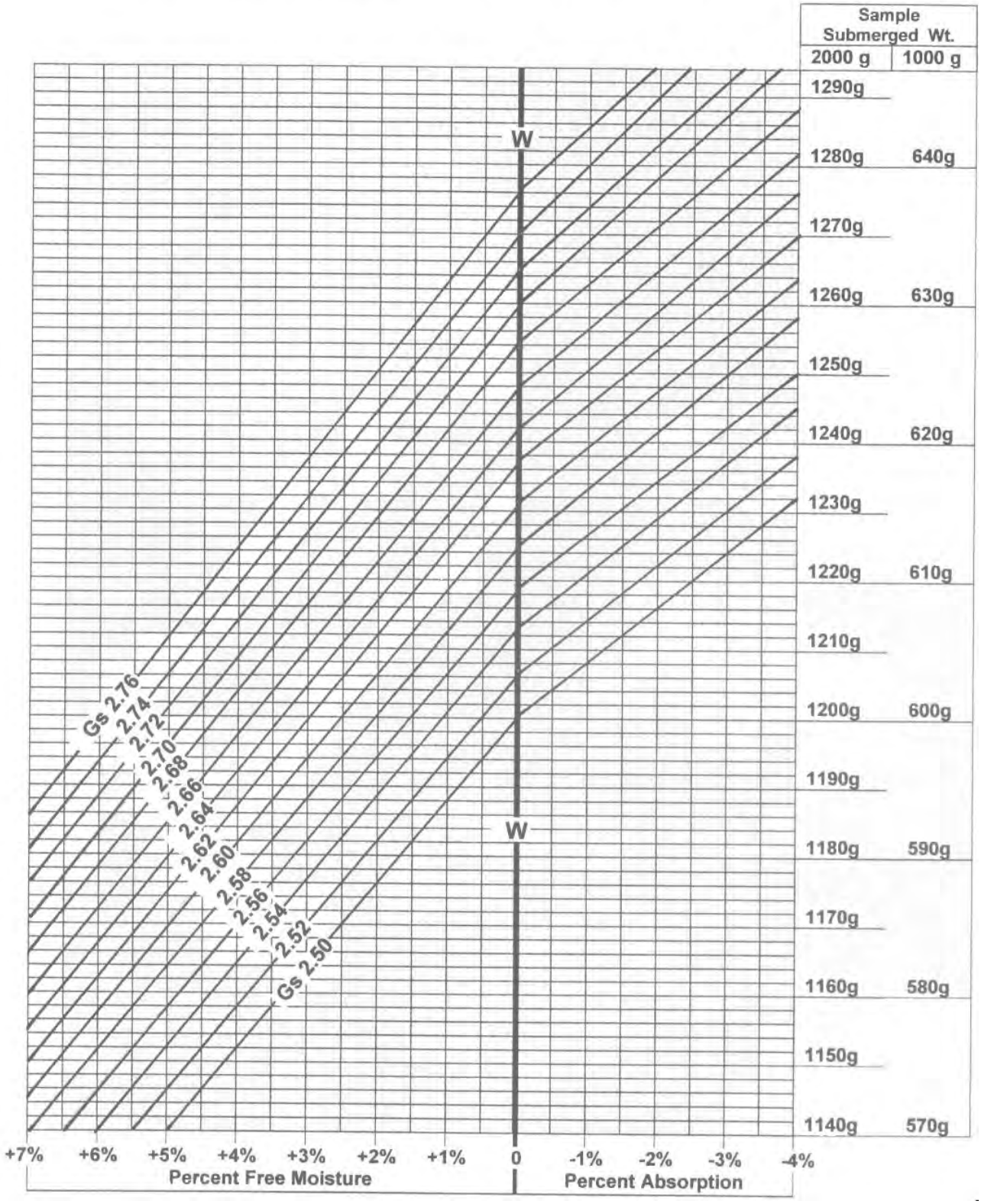

Illinois Test Procedure 303

Effective Date: April 1, 2009

Fine or Coarse Aggregate Moisture Content by Pycnometer Jar Method

Reference Test Procedure(s):

1. Illinois Specification 101, Minimum Requirements for Electronic Balances

2. AASHTO M 231, Weighing Devices Used in the Testing of Materials

3. AASHTO T 2 (Illinois Modified), Sampling of Aggregates

4. AASHTO T 248 (Illinois Modified), Reducing Field Samples of Aggregate to Testing Size

5. ASTM E 29 (Illinois Modified), Standard Practice for Using Significant Digits in Test Data to Determine Conformance with Specifications

To maintain brevity in the text, the following will apply:
Example: AASHTO T 2 (Illinois Modified) will be designated as "T 2."
ASTM E 29 (Illinois Modified) will be designated as "ASTM E 29."

A. FINE OR COARSE AGGREGATE MOISTURE CONTENT

1. GENERAL

This Illinois Test procedure has been used for many years by District 2 (Dixon), but the District is uncertain as to the origin of the test. However, this test is similar to a test procedure used by the Iowa Department of Transportation. The test is a convenient procedure for field determination of **free moisture** (surface moisture) of fine or coarse aggregate, if specific gravity values are known.

The accuracy of the test procedure depends upon accurate information on the bulk specific gravity of the material in a saturated surface-dry condition.

All rounding shall be according to ASTM E 29.

2. EQUIPMENT

a. Balance – The balance or scale shall conform to AASHTO M 231 and Illinois Specification 101.

b. Pycnometer – A glass jar, gasket, and conical pycnometer top. A 0.946 L (1 qt.) jar is used for fine aggregate, and a 1.892 L (2 qt.) jar is used for coarse aggregate. Typically, a canning jar is used.

c. Funnel – A conical shape utensil which can be of any type of material. The funnel shall be of sufficient size for placement on top of the glass jar.

3. MATERIALS

a. Potable Water

b. Water Resistant Grease

c. Aggregate Sample

4. PROCEDURE

Select a representative sample of the fine or coarse aggregate to be tested for free moisture content. The sample shall be obtained according to T 2 and T 248. Protect the sample from moisture loss until weighing.

a. Mass of Pycnometer Filled with Water

- Apply a light coat of grease to the side of the gasket which will be in contact with the glass jar.
- Screw the pycnometer top tightly on the glass jar.
- Place a mark on the pycnometer top and glass jar to indicate the position of the tightened top. Always tighten the pycnometer top to this position. If the pycnometer top is ever tightened beyond the mark on the glass jar, re-mark the top of the jar.
- Fill the glass jar nearly full of water and screw on the pycnometer top. Finish filling the pycnometer by pouring water until a bead of water appears above the top's opening.
- Wipe off all exterior water on the pycnometer, and then weigh to the nearest 1 gram. Record the value as M_1.

b. Mass of Aggregate Sample

- When testing fine aggregate, measure a 1000 gram test sample.
- When testing coarse aggregate, measure a 2000 gram test sample.

c. Mass of Pycnometer Filled with Water and Aggregate

- Use the funnel to pour the aggregate sample into the glass jar. The jar shall contain approximately 50 mm (2 in.) of water.

- Fill the glass jar nearly full of water, and screw on the pycnometer top to the marked position. The water temperature shall be within ± 1.7 °C (3 °F) of the water used for calibrating the pycnometer. Finish filling the pycnometer.

- Place a finger over the pycnometer top opening, and gently roll and shake the pycnometer several times to remove entrapped air in the aggregate sample. When further rolling and shaking brings no more air bubbles to the top, finish filling the pycnometer. The pycnometer is filled when a bead of water appears above the top's opening.

- Wipe off all exterior water on the pycnometer, and then weigh to the nearest 1 gram. Record the value as M_2.

5. CALCULATION

a. Mass of Water Displaced by the Aggregate Sample

$V_S = M_1 + M_S - M_2$

Where:

V_S = Mass of Water Displaced by the Aggregate Sample, nearest 1 gram.

M_1 = Mass of Pycnometer Filled with Water, nearest 1 gram.

M_S = Mass of Aggregate Sample (1000 grams for fine aggregate and 2000 grams for coarse aggregate).

M_2 = Mass of Pycnometer Filled with Water and Aggregate, nearest 1 gram.

b. Moisture Content

Calculate moisture content to the nearest 0.1 percent using the following equations:

Fine Aggregate Free Moisture (percent) = $\dfrac{V_S - (1000 \div G_S)}{1000 - V_S} \times 100$

Coarse Aggregate Free Moisture (percent) = $\dfrac{V_S - (2000 \div G_S)}{2000 - V_S} \times 100$

Where:

V_S = Mass of Water Displaced by the Aggregate Sample, nearest 1 gram.

G_S = Saturated Surface-Dry Specific Gravity of Aggregate, nearest 0.01.

Illinois Department of Transportation

Aggregate Moisture Worksheet
Pycnometer Jar Method

Date: (mm/dd/yyyy) _____

Producer No.: _____

Producer Name: _____

Location: _____

	Coarse Aggregate	Fine Aggregate
1. Aggregate Specific Gravity at Saturated Surface-Dry (SSD)		
2. Sample Size, g.....	2000	1000
3. Sample Size ÷ Specific Gravity ..... Line 2 ÷ Line 1		
4. Mass of pycnometer full of water, g		
5. Mass of pycnometer containing sample and water, g		
6. Mass of water displaced by sample, g..... Line 2 + Line 4 - Line 5		
7. Difference, g ..... Line 6 - Line 3		
8. Sample Size minus water displaced, g ..... Line 2 - Line 6		
9. Percent Surface Moisture, *P*, +/- %..... Line 7 ÷ Line 8 × 100		

Coarse Aggregate Surface Moisture, $$P = \left[\frac{V_s - (2000/G_s)}{2000 - V_s} \right] \times 100$$

Fine Aggregate Surface Moisture, $$P = \left[\frac{V_s - (1000/G_s)}{1000 - V_s} \right] \times 100$$

Where: P is the surface moisture, to the nearest 0.1 %
V_s is the mass of water displaced by the aggregate sample, to the nearest 1 g
G_s is the aggregate specific gravity at saturated surface-dry, to the nearest 0.01

BMPR PCCW02 (03/10/09)

Illinois Test Procedure 306
Effective Date: April 1, 2008

VOIDS TEST OF COARSE AGGREGATE FOR CONCRETE MIXTURES

Reference Test Procedure(s):

1. Illinois Specification 101, Minimum Requirements for Electronic Balances

2. AASHTO M 231, Weighing Devices Used in the Testing of Materials

3. AASHTO T 255 (Illinois Modified), Total Moisture Content of Aggregate by Drying

4. ASTM E 29 (Illinois Modified), Standard Practice for Using Significant Digits in Test Data to Determine Conformance with Specifications

To maintain brevity in the text, the following will apply:
Example: AASHTO T 255 (Illinois Modified) will be designated as "T 255."
ASTM E 29 (Illinois Modified) will be designated as "ASTM E 29."

1. GENERAL

The volume of voids per unit volume of dry rodded coarse aggregate relates experimental data to the theory of proportioning, which produces the amount of coarse aggregate needed in a concrete mixture. Voids may also be defined as the ratio of the volume of empty spaces in a unit volume of dry rodded coarse aggregate to the unit volume of dry rodded coarse aggregate.

All rounding shall be according to ASTM E 29.

2. EQUIPMENT

a. The measure shall be metal, cylindrical, watertight, and of sufficient rigidity to retain its form under rough usage. The top and bottom of the measure shall be true and even, and its sides should be provided with handles. The measure shall have a capacity of 0.014 or 0.028 m^3 (0.5 or 1.0 ft^3).

b. Tamping Rod—A round, straight steel rod 16 mm (5/8 in.) in diameter and at least 584 mm (23 in.) in length, having the tamping end or both ends rounded to a hemispherical tip the diameter of which is 16 mm (5/8 in.).

c. The balance or scale shall conform to M 231 and Illinois Specification 101. Refer to the requirements for unit weight.

3. PROCEDURE

a. Fill the measure with water at room temperature and cover with a piece of plate glass in such a way as to eliminate bubbles and excess water. The measure shall be calibrated by accurately determining the mass (weight) of water, to the nearest 0.05 kg (0.1 lb.), required to fill it. Calculate the Measure Volume according to Section 5.0.

b. The sample of aggregate shall be obtained and dried according to T 255, and shall be thoroughly mixed. When more than one size coarse aggregate is to be used in a mixture, the test shall be performed on the combination.

c. The measure shall be filled in three equal lifts. Level each lift with the fingers. Each layer shall be rodded 25 times when the measure's capacity is 0.014 m^3 (0.5 ft^3) or 50 times when the measure's capacity is 0.028 m^3 (1.0 ft^3).

   Rodding shall be evenly distributed over the surface of the aggregate. The rodding should knead the layers together by the tamping rod extending slightly into the previous layer. Care shall be taken to rod immediately above the bottom of the measure without striking it.

d. With the final layer, the measure shall be filled to overflowing, rodded, and the surplus aggregate struck off, using the tamping rod as a straightedge.

e. The Net Mass (Weight) of the aggregate in the measure shall then be determined to the nearest 0.05 kg (0.1 lb.).

4. CALCULATIONS

a. The Unit Weight of the coarse aggregate is the Net Mass (Weight) of the coarse aggregate in the measure divided by the Measure Volume. Determine the Unit Weight to the nearest 0.01 kg/m^3 (0.01 lb/ft^3).

b. The volume of voids per unit volume of oven-dry rodded coarse aggregate is calculated to the nearest 0.01 as follows:

   Metric:

$$\text{Voids, } V = \frac{(G_a \times 1000.00) - \text{Unit Wt.}}{G_a \times 1000.00}$$

   English:

$$\text{Voids, } V = \frac{(G_a \times 62.37) - \text{Unit Wt.}}{G_a \times 62.37}$$

$$G_a = \frac{G_s}{\left(1 + \frac{A}{100}\right)}$$

Where: *Unit Wt.* is the unit weight of the coarse aggregate

G_a is the oven-dry specific gravity calculated to the nearest 0.01

G_s is the saturated surface-dry specific gravity of the coarse aggregate to the nearest 0.01, which is obtained from the Department's District office.

A is the percent absorption of the coarse aggregate to the nearest 0.1, which is obtained from the Department's District office.

When more than one size coarse aggregate is used in a mixture, calculate the oven-dry specific gravity for each aggregate. Then obtain a weighted average of the oven-dry specific gravity using the following formula.

$$WAG_a = (\frac{a}{100} \text{ x } A) + (\frac{b}{100} \text{ x } B) + (\frac{c}{100} \text{ x } C) + \ldots$$

Where: WAG_a = Weighted Average of Oven-dry Specific Gravity

a,b,c… = Percent of Total Coarse Aggregate

A,B,C… = Oven-dry Specific Gravity

The weighted average of the oven-dry specific gravity shall then be used in the Voids formula.

c. The test shall be performed at least twice. Test results with the same measure should check within 0.01.

5. CALIBRATION OF MEASURE

The Measure Volume is calculated to the nearest 0.01 m^3 (0.001 ft^3) as follows:

$$\text{Measure Volume} = \frac{M}{W}$$

Where: *M* = mass (weight) of water required to fill measure, kg (lb.)

W = unit weight of water (refer to Table 1), kg/m^3 (lb/ft^3)

Table 1. Unit Weight of Water

Temperature of Water		kg / m^3	lb / ft^3
°C	°F		
15.6	60	999.01	62.366
18.3	65	998.54	62.336
21.1	70	997.97	62.301
23.0	73.4	997.54	62.274
23.9	75	997.32	62.261
26.7	80	996.59	62.216
29.4	85	995.83	62.166