Bench Marks: Chiseled square on raised concrete median at center of U.S. 45 approximately 140'-0" North of F.A.I. 57/70 centerline. U.S. Route 45 Sta. 60+10.00 Elev. 592.07.

Existing Structure: SN 025-8648 is a Y-Shaped single cell box culvert. The West branch carries U.S. 45 over unnamed branch. The North & South branch carries F.A.I. 57/70 over unnamed branch. The original structures were constructed in 1959. The West and North branches consist of Cast-In-Place construction and the South branch consists of a voided bottom slab and T-Beams for the top slab. In 1992 the North and South branches were extended. The North branch extension consisted of Cast-In-Place construction and the South branch consisted of Cast-In-Place side walls and bottom slab with a top slab consisting of 17"x36" prestressed concrete deck beams. Traffic will be maintained at all times during construction.

No Salvage.

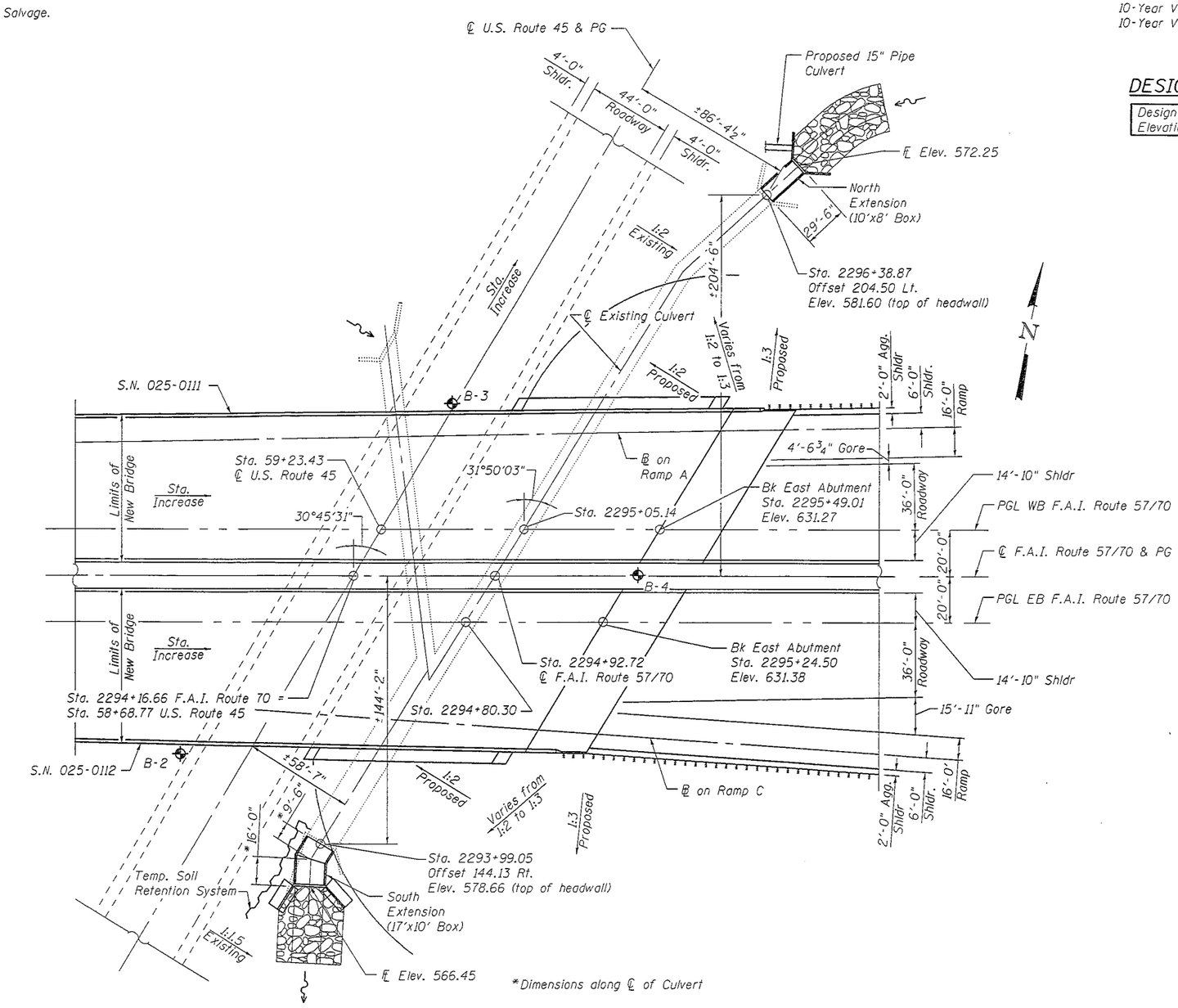

PLAN

WATERWAY INFORMATION

Drainage Area = 1.21 miles
Existing Low Grade Elev. 587.05 @ Sta. 57+00
Proposed Low Grade Elev. 587.05 @ Sta. 57+00

Flood	Frequency Year	Discharge C.F.S.	Headwater El. Exist.	Headwater El. Prop.
Ten-Year	10	344	578.32	578.35
Design	50	550	580.21	580.26
Base	100	642	581.06	581.09

10-Year Velocity through Existing Culvert = 4.90 fps
10-Year Velocity through Proposed Culvert = 4.90 fps

DESIGN SCOUR ELEVATION TABLE

Design Scour Elevation (ft.)	N. Extension	S. Extension
	568.00	562.15

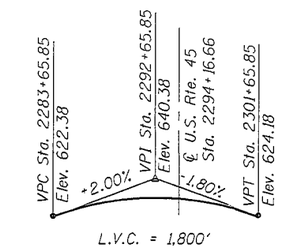

PROFILE GRADE
(F.A.I. Route 57/70)

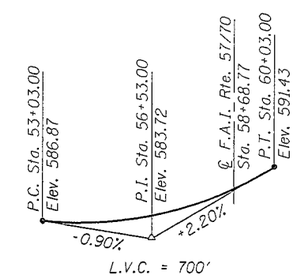

EXISTING PROFILE GRADE
(U.S. Route 45)

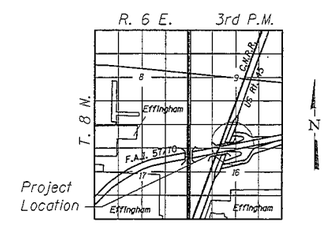

LOCATION SKETCH

DESIGN SPECIFICATIONS

2012 AASHTO LRFD Bridge Design Specifications, 6th Edition

LOADING HL-93 & ALT

Allow 50#/sq. ft. for future wearing surface.

HIGHWAY CLASSIFICATION

F.A.I. Route 57/70
Functional Class: Other Interstate
ADT: 36,800 (2009); 55,600 (2031)
ADTT: 12,880 (2009); 19,460 (2031)
DHV: 5560
Design Speed: 70 m.p.h.
Posted Speed: 65 m.p.h.
2-Way Traffic
Directional Distribution: 50:50

HIGHWAY CLASSIFICATION

U.S. Route 45
Functional Class: Other Principal Arterial
ADT: 10,200 (2009); 14,200 (2031)
ADTT: 1632 (2009); 2272 (2031)
DHV: 1420
Design Speed: 50 m.p.h.
Posted Speed: 45 m.p.h.
2-Way Traffic
Directional Distribution: 50:50

DESIGN STRESSES

Existing: 1992 Construction
f'c = 3,500 psi
fy = 60,000psi (Reinforcement)

New Construction
f'c = 3,500 psi
fy = 60,000 psi (Reinforcement)
fy = 50,000 psi (Structural)

APPROVED
JAN 22 2013
FOR PREPARATION OF PROFILED PLANS

GENERAL PLAN
F.A.I. ROUTE 57/70 & U.S. RTE. 45
OVER EXISTING Y-SHAPED CULVERT
SECTION (25-4HVB-1)BY
EFFINGHAM COUNTY
STATION 2294+91.09
SN 025-8648

FILE NAME = ...\0258648-74295-001-TSL.dgn	USER NAME =	DESIGNED - ACS	REVISED -	STATE OF ILLINOIS DEPARTMENT OF TRANSPORTATION	
BERNARDONI-LOCHMUELLER & ASSOCIATES, INC. 3 OAK DRIVE MARYVILLE, ILLINOIS 62062 PHONE (618) 288-4563 FAX (618) 288-4696	Illinois Design Firm Number 184.001670	CHECKED - BB	REVISED -		
	PLOT SCALE =	DRAWN - WJS	REVISED -		
	PLOT DATE = 2:22:25 PM 12/31/2012	CHECKED - CJF	REVISED -		SHEET NO. 1 OF 4 SHEETS

F.A.I. RTE.	SECTION	COUNTY	TOTAL SHEETS	SHEET NO.
57/70	(25-4HVB-1)BY	EFFINGHAM		
		CONTRACT NO. 74295		
		ILLINOIS FED. AID PROJECT		

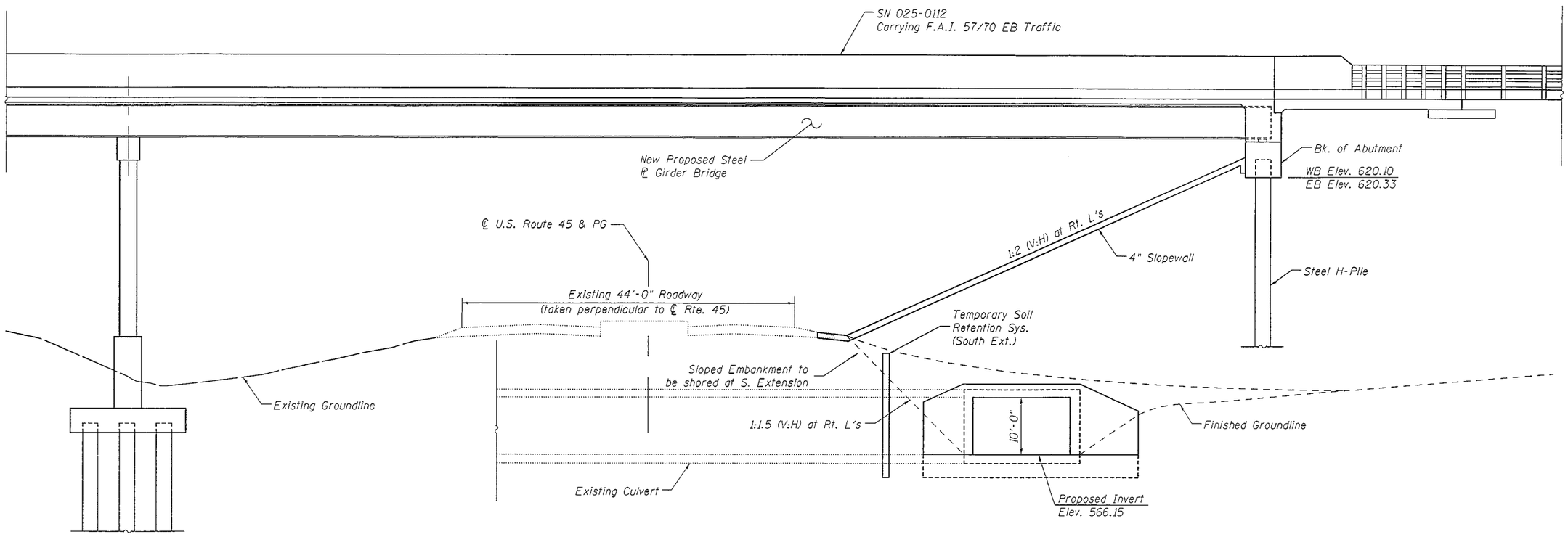

ELEVATION

(Looking North from S. End of Culvert Extension)

APPROVED

JAN 22 2013

AS A BASIS FOR
PREPARATION OF DETAILED PLANS

GENERAL ELEVATION
F.A.I. ROUTE 57/70 & U.S. RTE. 45
OVER EXISTING Y-SHAPED CULVERT
SECTION (25-4HVB-1)BY
EFFINGHAM COUNTY
STATION 2294+91.09
SN 025-8648

FILE NAME = ..\0258648-74295-002-TSL.dgn	USER NAME =	DESIGNED - ACS	REVISED -	STATE OF ILLINOIS DEPARTMENT OF TRANSPORTATION		F.A.I. RTE.	SECTION	COUNTY	TOTAL SHEETS	SHEET NO.
BERNARDIN, LOCHMUELLER & ASSOCIATES, INC. 2 OAK DRIVE MARYVILLE, ILLINOIS 62062 PHONE (618) 205-4666 FAX (618) 205-4666	Illinois Design Firm Number 184.001670	CHECKED - BB	REVISED -			57/70	(25-4HVB-1)BY	EFFINGHAM		
	PLOT SCALE =	DRAWN - WJS	REVISED -					CONTRACT NO. 74295		
	PLOT DATE = 2:22:41 PM 12/31/2012	CHECKED - CJF	REVISED -		SHEET NO. 2 OF 4 SHEETS		ILLINOIS	FED. AID PROJECT		

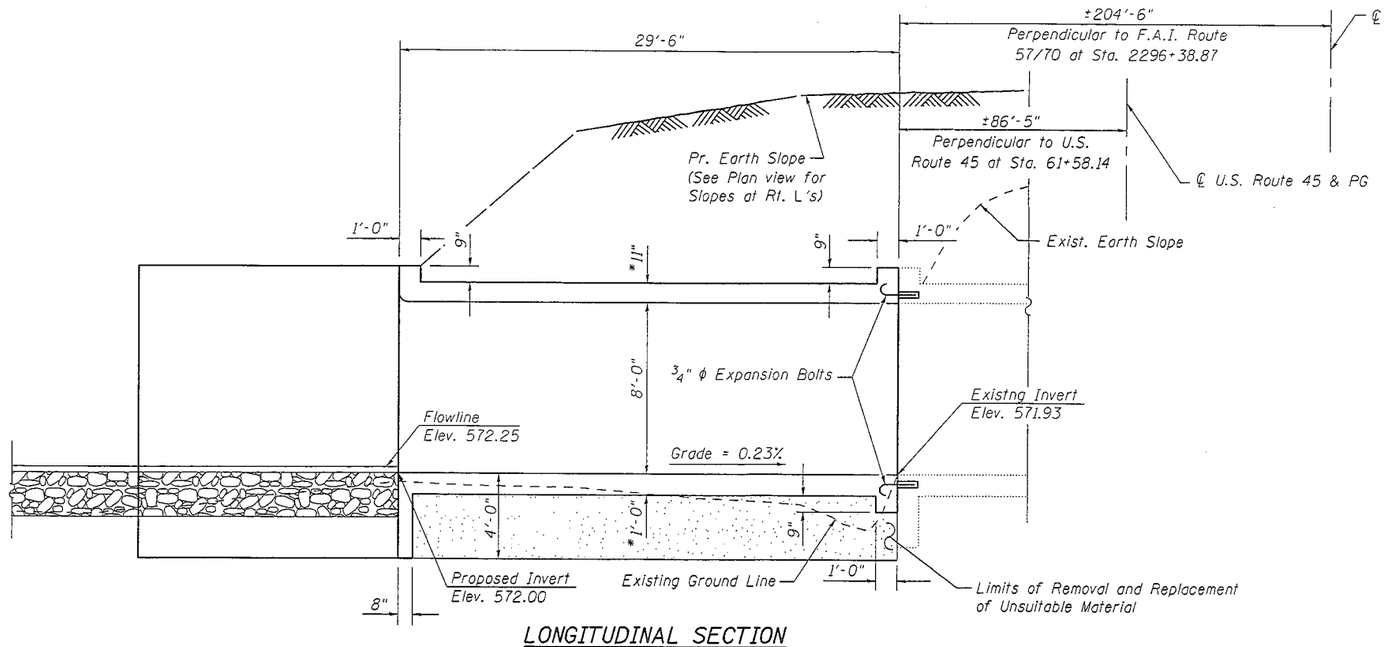

LONGITUDINAL SECTION
(East Wing Shown)

Notes:
Remove existing unsuitable material under the culvert as shown and replace with two feet of rockfill. Place one foot of crushed limestone above rockfill. Rockfill depth may increase during construction.
For Section A-A see sheet 4 of 4.

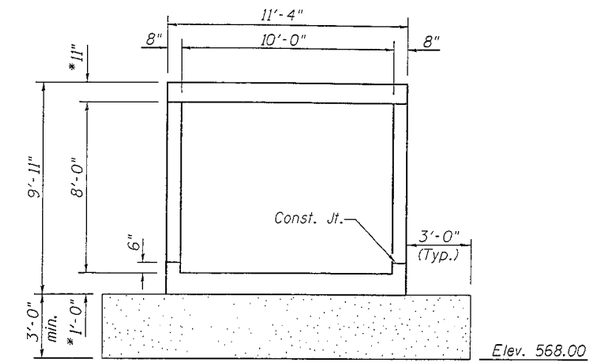

SECTION THRU BARREL

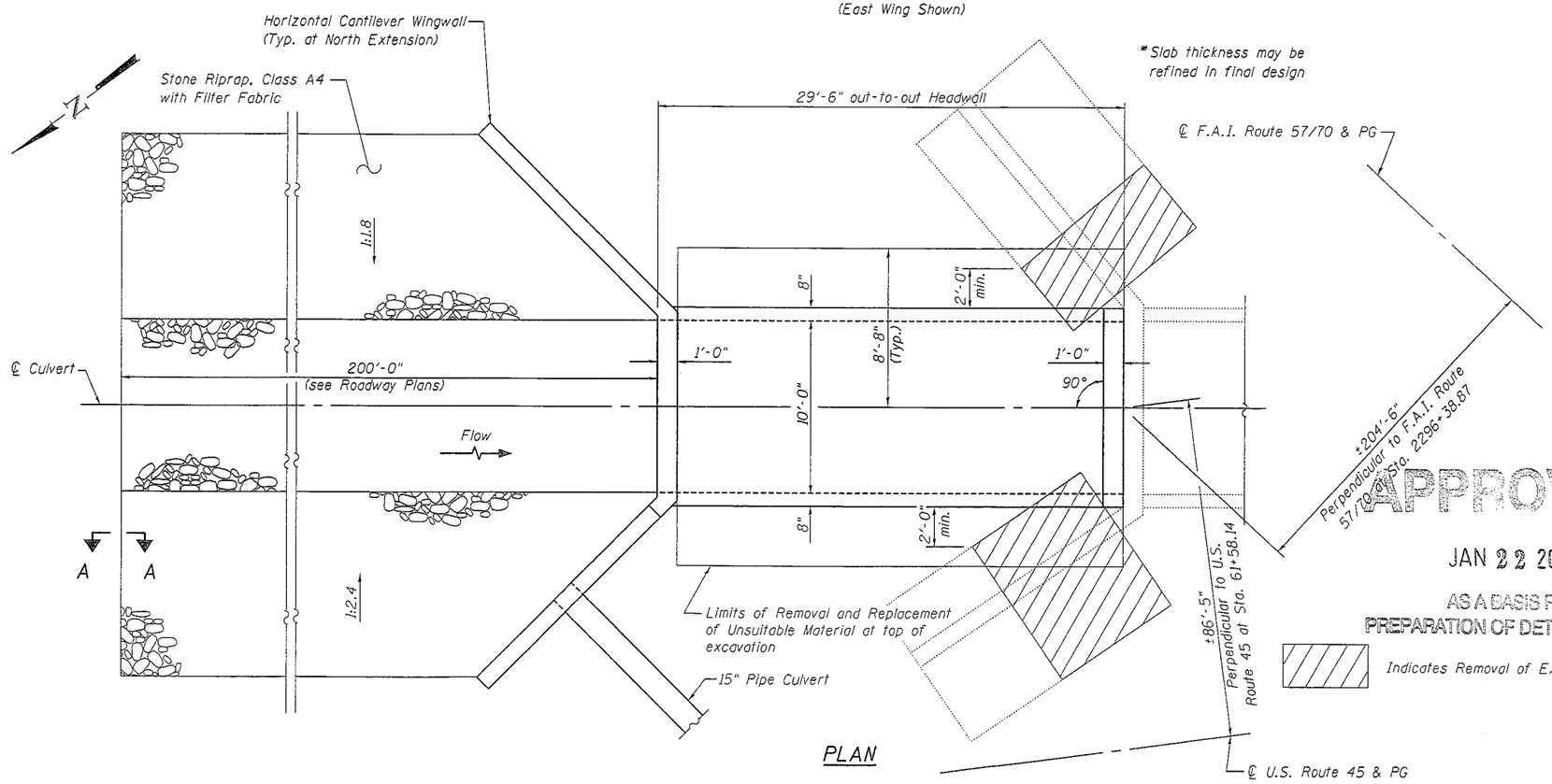

*Slab thickness may be refined in final design

PLAN

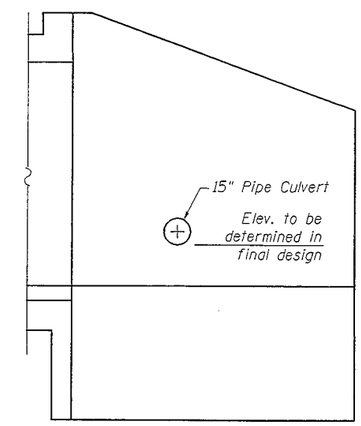

WEST WINGWALL ELEVATION VIEW

APPROVED
JAN 22 2013
AS A BASIS FOR
PREPARATION OF DETAILED PLANS

Indicates Removal of Existing Wing Walls

NORTH EXTENSION
F.A.I. ROUTE 57/70 & U.S. RTE. 45
OVER EXISTING Y-SHAPED CULVERT
SECTION (25-4HVB-1)BY
EFFINGHAM COUNTY
STATION 2294+91.09
SN 025-8648

FILE NAME = _\0258648-74295-003-TSL.dgn	USER NAME =	DESIGNED - ACS	REVISED -	STATE OF ILLINOIS DEPARTMENT OF TRANSPORTATION		F.A.I. RTE.	SECTION	COUNTY	TOTAL SHEETS	SHEET NO.
BERNARDIN • LOCHMUELLER & ASSOCIATES, INC. 3 OAK DRIVE MARYVILLE, ILLINOIS 62062 PHONE (618) 288-4666 FAX (618) 288-4666	Illinois Design Firm Number 184.001670	CHECKED - BB	REVISED -			57/70	(25-4HVB-1)BY	EFFINGHAM		
	PLOT SCALE =	DRAWN - WJS	REVISED -					CONTRACT NO. 74295		
	PLOT DATE = 2:22:55 PM 12/31/2012	CHECKED - CJF	REVISED -		SHEET NO. 3 OF 4 SHEETS		ILLINOIS FED. AID PROJECT			

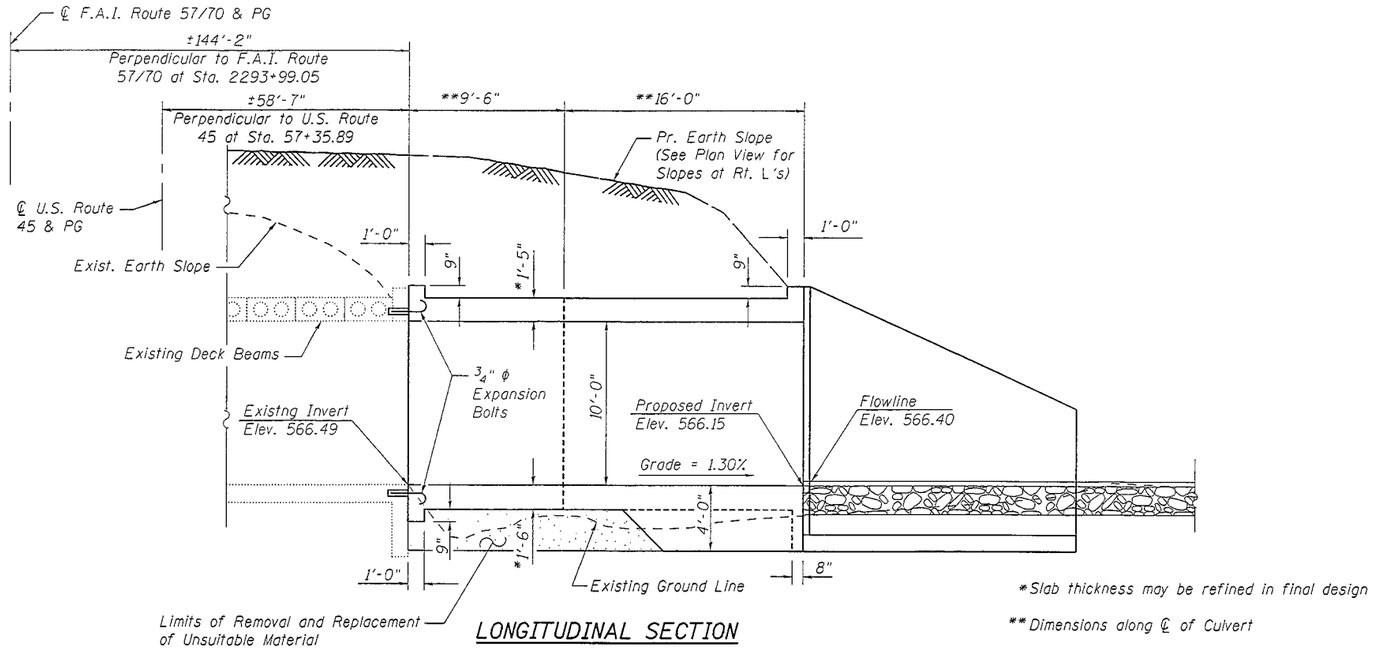

LONGITUDINAL SECTION

*Slab thickness may be refined in final design

** Dimensions along ℄ of Culvert

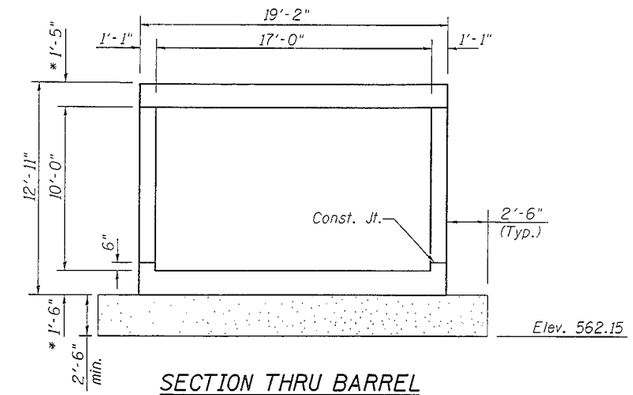

SECTION THRU BARREL

Notes:
Remove existing unsuitable material under the culvert as shown and replace with one and one half feet of rockfill. Place one foot of crushed limestone above rockfill. Rockfill depth may increase during construction.

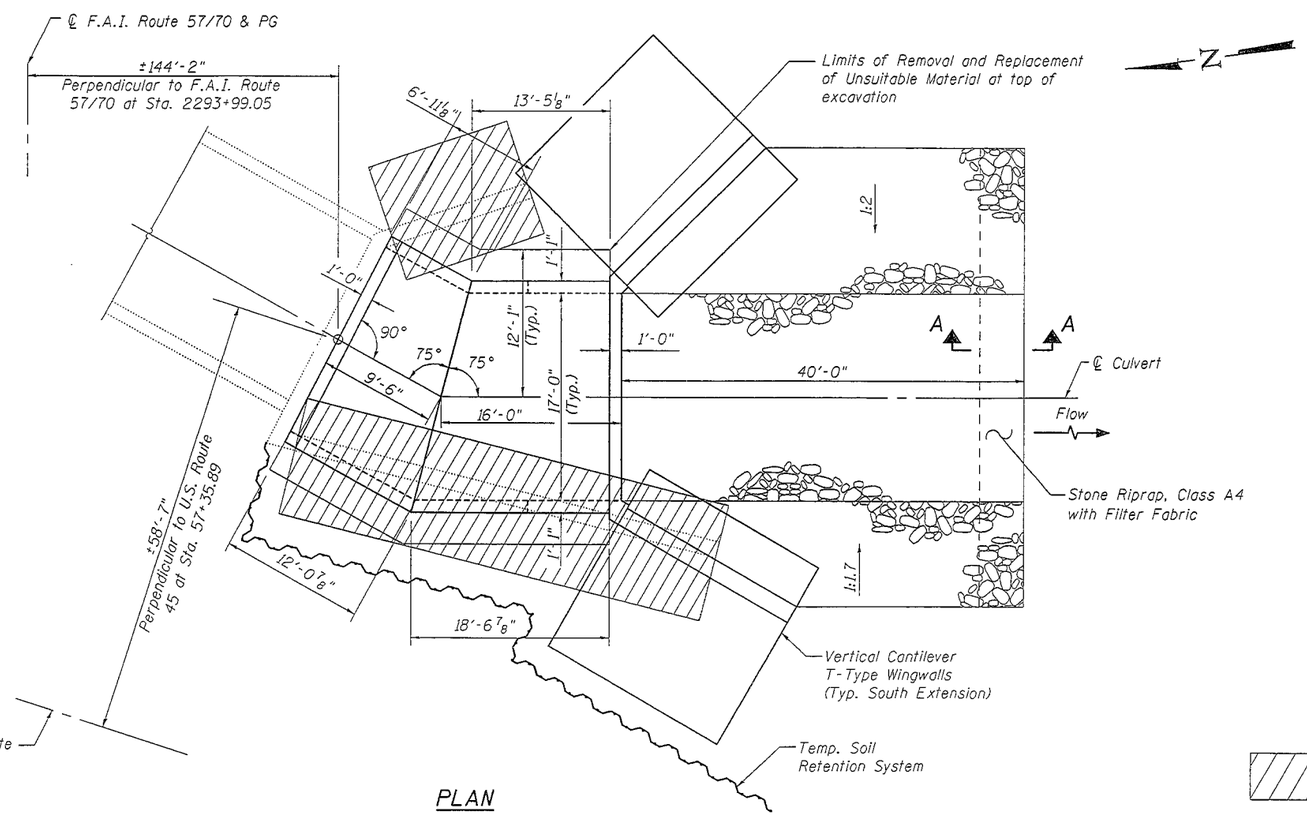

PLAN

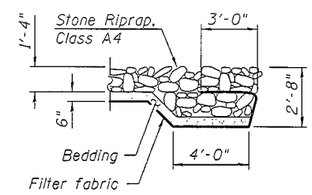

SECTION A-A

APPROVED

JAN 22 2013

AS A BASIS FOR PREPARATION OF DETAILED PLANS

Indicates Removal of Existing Wing Walls & Culvert

SOUTH EXTENSION
F.A.I. ROUTE 57/70 & U.S. RTE. 45
OVER EXISTING Y-SHAPED CULVERT
SECTION (25-4HVB-1)BY
EFFINGHAM COUNTY
STATION 2294+91.09
SN 025-8648

FILE NAME = _\02588648-74295-004-TSL.dgn	USER NAME =	DESIGNED - ACS	REVISED -	STATE OF ILLINOIS DEPARTMENT OF TRANSPORTATION		F.A.I. RTE.	SECTION	COUNTY	TOTAL SHEETS	SHEET NO.
BERNARDIN • LOCHMUELLER & ASSOCIATES, INC. 3 OAK DRIVE MARYVILLE, ILLINOIS 62062 PHONE (618) 288-4556 FAX (618) 288-4566	Illinois Design Firm Number 184.001670	CHECKED - BB	REVISED -			57/70	(25-4HVB-1)BY	EFFINGHAM		
	PLOT SCALE =	DRAWN - WJS	REVISED -					CONTRACT NO. 74295		
	PLOT DATE = 2:23:13 PM 12/31/2012	CHECKED - CJF	REVISED -		SHEET NO. 4 OF 4 SHEETS		ILLINOIS FED. AID PROJECT			