BENCH MARK:

TMB "A" - Elev. 696.20, NW Bolt of Old billbord Foundation +/-50 ftSouth of Rte. 132 C.L. and +/-50 ft. West of Pine Grove Ave.

EXISTING STRUCTURE: None

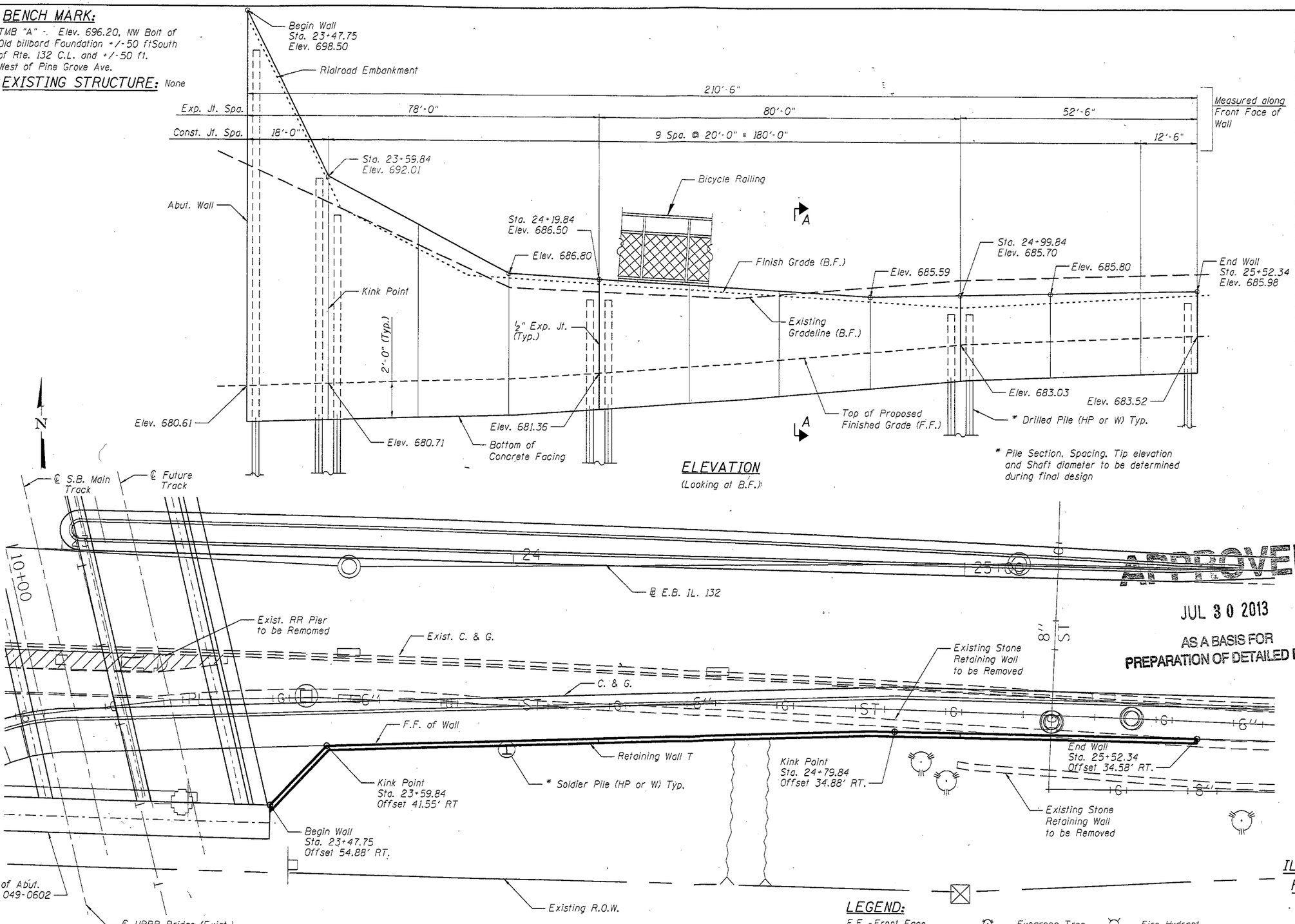

ELEVATION
(Looking at B.F.)

* Pile Section, Spacing, Tip elevation and Shaft diameter to be determined during final design

PLAN

DESIGN SPECIFICATIONS

2012 AASHTO LRFD Bridge Design, 6th Edition

DESIGN STRESSES

FIELD UNITS

f'c = 3,500 psi
fy = 60,000 psi (Reinforcement)
fy = 36,000 psi (Structural Steel M270 Grade 36)

SEISMIC DATA

Seismic Performance Zone (SPZ) = 1
Design Spectral Acceleration at 1.0 sec. (S_{D1}) = 0.054g
Design Spectral Acceleration at 0.2 sec. (S_{DS}) = 0.092g
Soil Site Class = C

HIGHWAY CLASSIFICATION

F.A.U. Rte. 1218 - IL Rte. 132
Functional Class: Prinipal Arterial
ADT: 25,200 (2012) 33,900 (2032)
ADTT: 685 (2012) 923 (2032)
DHV: 2,330
Design Speed: 40 m.p.h.
Posted Speed: 35 m.p.h.
Two-Way Traffic

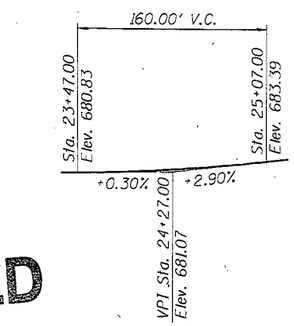

PROFILE GRADE
IL. 132 E.B. & W.B.

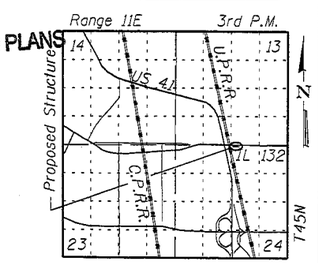

LOCATION SKETCH

APPROVED
JUL 30 2013
AS A BASIS FOR PREPARATION OF DETAILED PLANS

NOTE:

1. Offsets are given from Baseline W.B. IL. 132 to F.F. of Wall.

LEGEND:

F.F - Front Face
B.F. - Back Face
B-1 - Borehole B-1
- Tree
- Bush
- Evegreen Tree
- Manhole
- Catch Basin
- Power Pole
- Hand Hole
- Fire Hydrant
- Traffic Signal
- Light Pole
- Sign

GENERAL PLAN
RETAINING WALL T
IL. ROUTE 132 (GRAND AVE.)
F.A.U. 1218 - SEC. 125X-N
LAKE COUNTY
STATION 23+33.83 TO
STATION 25+52.27
STRUCTURE NO. 049-W048

HOH HARRY O. HEFTER-ASSOCIATES, INC. DESIGN AND CONSULTING ENGINEERS 55 East Jackson Blvd. Chicago, Illinois 60604 312/346-8131

FILE NAME =	USER NAME = $USER$	DESIGNED - MMH	REVISED -
		CHECKED - DNB	REVISED -
	PLOT SCALE = 21.6882 ' / IN.	DRAWN - R.VEJAR	REVISED -
	PLOT DATE = 6/26/2013	CHECKED - DNB	REVISED -

STATE OF ILLINOIS
DEPARTMENT OF TRANSPORTATION

IL. ROUTE 132 E.B. RETANING WALL T
GENERAL PLAN AND ELEVATION
SHEET NO. 1 OF 2 SHEETS

F.A.P RTE.	SECTION	COUNTY	TOTAL SHEETS	SHEET NO.
1218	125X-N	LAKE		
		CONTRACT NO.		
		ILLINOIS FED. AID PROJECT		

H:\Projects\13365\Drawings\Structural\T58L\13365-SPNT.dgn

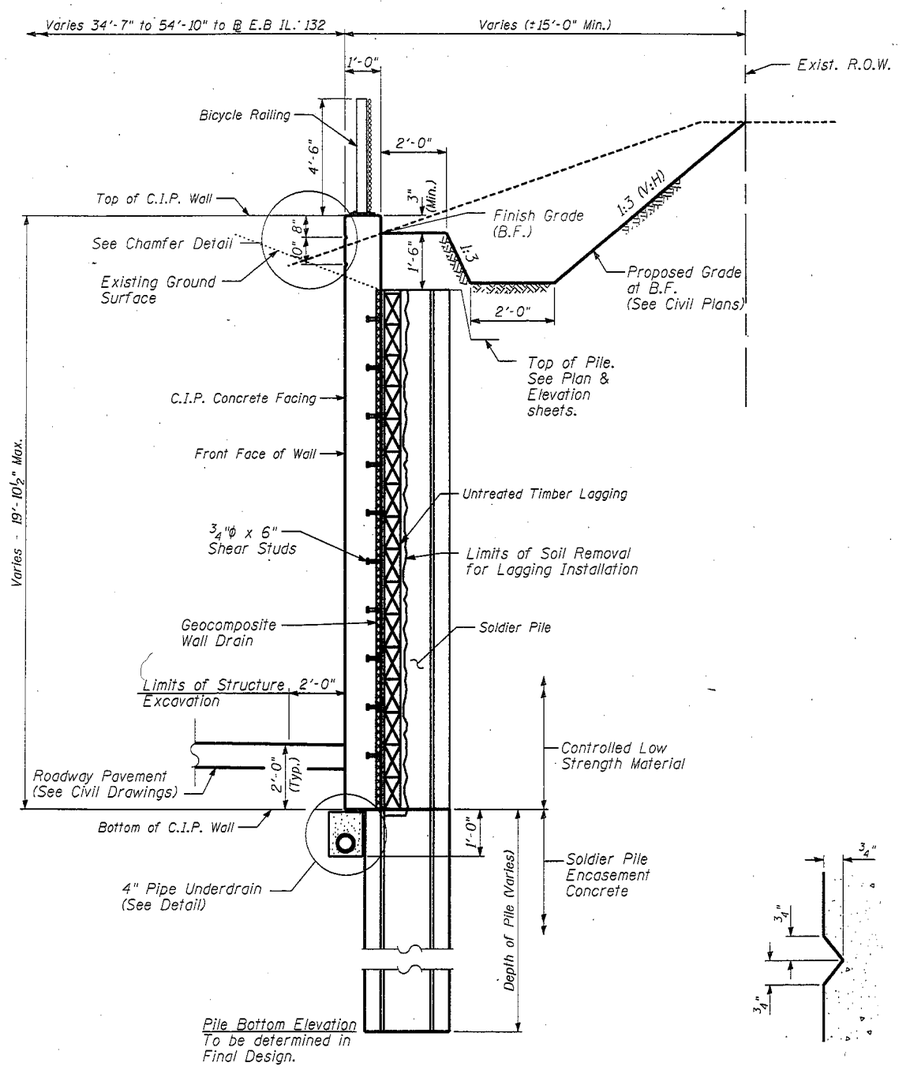

SECTION A-A

CHAMFER DETAIL

Cost of Chamfer included with "Concrete Structures"

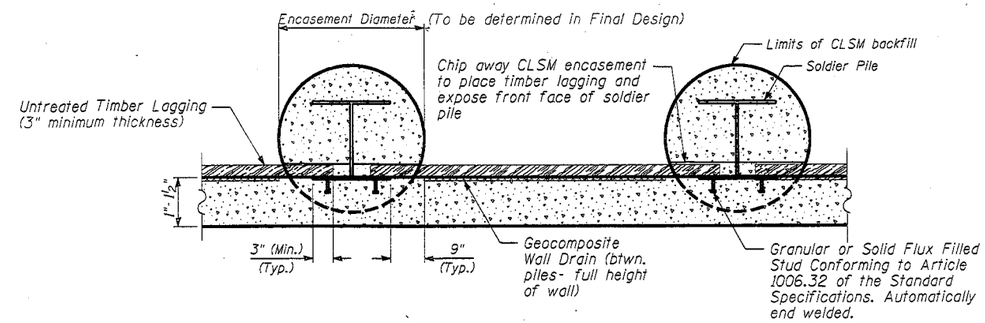

TYPICAL SECTION THRU DRILLED SOLDIER PILE WALL

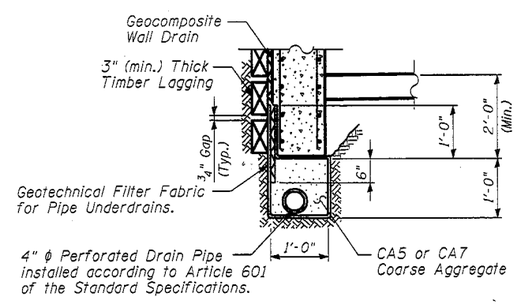

PIPE UNDERDRAIN DETAIL BETWEEN SOLDIER PILES

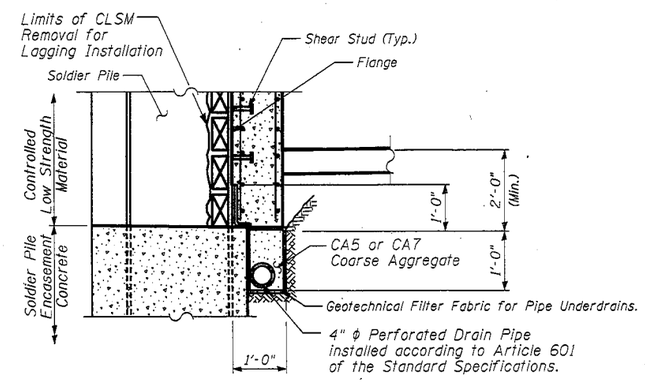

PIPE UNDERDRAIN DETAIL AT SOLDIER PILE

RETAINING WALL SECTIONS AND DETAILS
RETAINING WALL T
IL. ROUTE 132 (GRAND AVE.)
F.A.U. 1218 - SEC. 125X-N
LAKE COUNTY
STATION 23+33.83 TO STATION 25+52.27
STRUCTURE NO. 049-W048

H:\Projects\33861\Drawings\Structural\T58L\33861-RET WALL T.dgn

HOH HARRY D. HEFTER-ASSOCIATES, INC. DESIGN AND CONSULTING ENGINEERS 55 East Jackson Blvd. Chicago, Illinois 60604 312/346-6131

FILE NAME =	USER NAME = $USER$	DESIGNED - MMH	REVISED -	STATE OF ILLINOIS DEPARTMENT OF TRANSPORTATION	UNION PACIFIC RAILROAD BRIDGE RETAINING WALL SECTIONS AND DETAILS	F.A.P RTE. 1218	SECTION 125X-N	COUNTY LAKE
		CHECKED - DNB	REVISED -					CONTRACT NO. ____
	PLOT SCALE = 5:5.0647 ':' / IN.	DRAWN - R.VEJAR	REVISED -					
	PLOT DATE = 6/27/2013	CHECKED - DNB	REVISED -		SHEET NO. 2 OF 2 SHEETS		ILLINOIS FED. AID PROJECT	

TOTAL SHEETS | SHEET NO.