Benchmark: RR spike in 15" tree. sta. 779+90.13. 239.00' LT. Elev. 714.76
Existing Structure: None

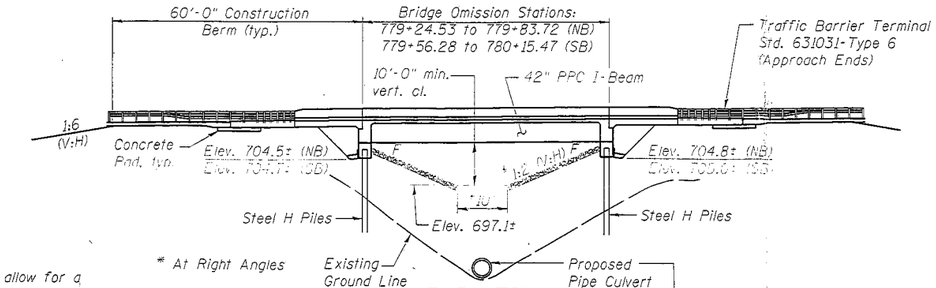

ELEVATION

Note:
The construction schedule should allow for a 30 day a delay between placement of embankment fill and installation of the abutment piles to allow for consolidation of the underlying soils. Settlement of the fill should be monitored during this period to confirm that the settlement is complete.

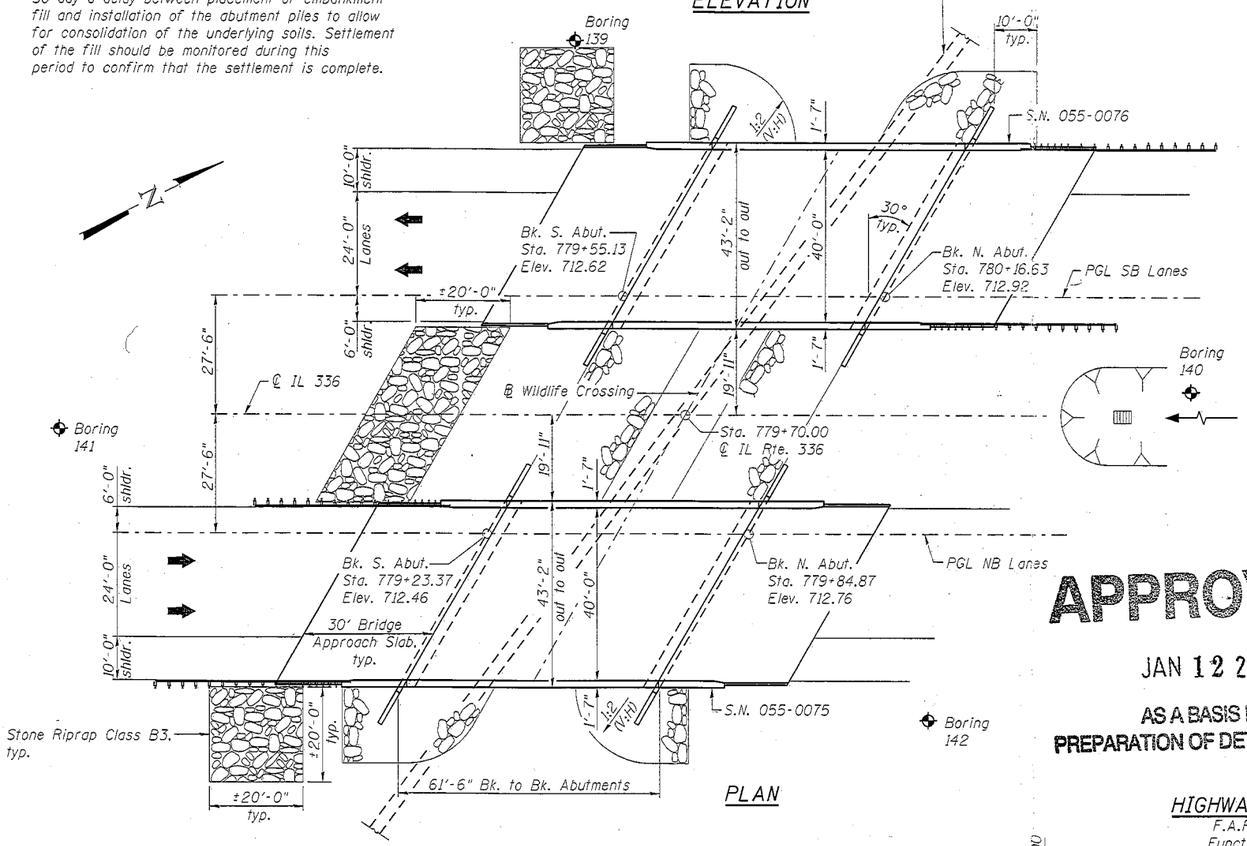

PLAN

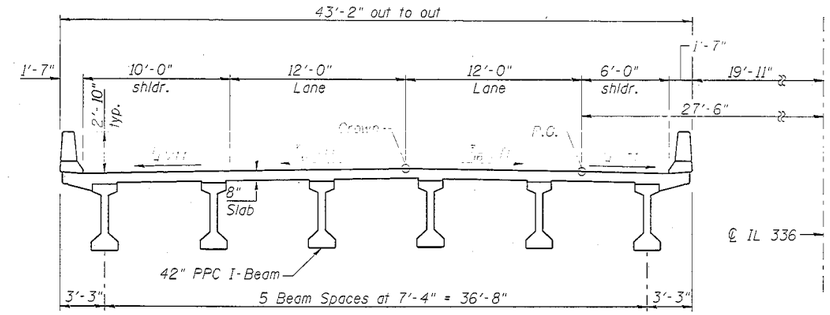

CROSS SECTION
(S.N. 055-0076 Looking North shown. S.N. 055-0075 similar)

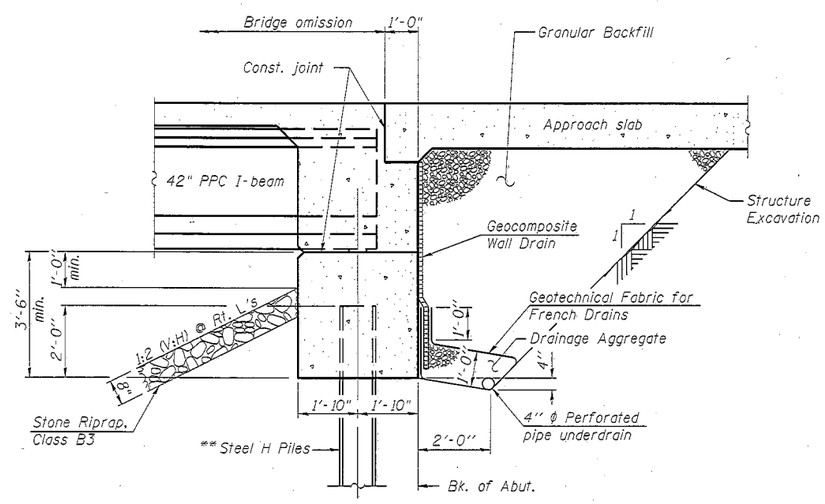

SECTION THRU ABUTMENT
(Horiz. dim. @ Rt. L's)

APPROVED
JAN 12 2013
AS A BASIS FOR
PREPARATION OF DETAILED PLANS

DESIGN STRESSES

FIELD UNITS

f'c = 3,500 psi
fy = 60,000 psi (Reinforcement)

PRECAST PRESTRESSED UNITS

f'c = 6,000 psi
f'ci = 5,000 psi
fpu = 270,000 psi (½"ϕ low lax. strands)
fpbt = 201,960 psi (½"ϕ lox lax. strands)

DESIGN SPECIFICATIONS

2012 AASHTO LRFD Bridge Design Specifications, 6th Edition

LOADING HL-93

Allow 50#/sq. ft. for future wearing surface.

SEISMIC DATA

Seismic Performance Zone (SPZ) = 1
Design Spectral Acceleration at 1.0 sec. (S_{D1}) = 0.08g
Design Spectral Acceleration at 0.2 sec. (S_{DS}) = 0.13g
Soil Site Class = C

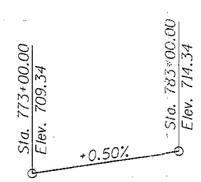

PROFILE GRADE
(along P.G.L. IL 336)

HIGHWAY CLASSIFICATION

F.A.P. 407 - (IL 336)
Functional Class: Freeway
ADT: 3045 (2015); 3715 (2035)
DHV: 305 (2015); 372 (2035)
ADTT = 10%
Design Speed: 70 m.p.h.
Posted Speed: 65 m.p.h.
Two-Way Traffic
Directional Distribution: 50:50

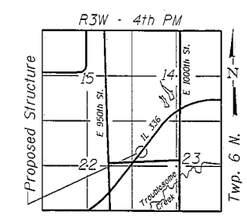

LOCATION SKETCH

GENERAL PLAN AND ELEVATION
IL 336 OVER WILDLIFE CROSSING #3
F.A.P. 407 - SECTION 55-3
McDONOUGH COUNTY
STATION 779+70.00
STRUCTURE NO. 055-0075 (NB)
STRUCTURE NO. 055-0076 (SB)

LIN ENGINEERING, LTD. Consulting Engineers Springfield, Illinois	USER NAME =	DESIGNED - MTH	REVISED -
	FILE NAME =	CHECKED - ADB	REVISED -
	PLOT SCALE =	DRAWN - TBP	REVISED -
	PLOT DATE =	CHECKED - MTH	REVISED -

STATE OF ILLINOIS
DEPARTMENT OF TRANSPORTATION

SHEET NO. 1 OF 1 SHEETS

F.A.P. RTE.	SECTION	COUNTY	TOTAL SHEETS	SHEET NO.
407	55-3	McDONOUGH		
		CONTRACT NO. 68418		
		ILLINOIS FED. AID PROJECT		