B.M.:
Chiseled "□" NE Corner Bottom Step Wingwall
EB I-80 over Barstow Rd. Structure, Sta. 287+08, 24' Rt.
Elev. 589.63

Brass Disk NW Corner of Parapet Wall
EB I-80 over Rock Riv. Structure, Sta. 300+18, 70' Rt.
Elev. 590.20

EXISTING STRUCTURE:

SN 081-0016 & SN 081-0017 originally built as FAI Route 80, Section 81-1HB-1 at Sta. 288+19.02 in 1965. Both structures were rehabilitated in 1990 including deck scarification, deck overlay, bearing replacement, traffic barrier improvement and expansion joint replacement as Section (81-1HB-1)M. The existing structures consist of 3-span continuous steel W-Beams with non-composite concrete deck, supported on concrete pile bent, spill through abutments and hammerhead type piers. The structures are 144'-7" back to back abutments and 43'-8" out to out of deck, and 35° 41' 30" degree skew. Existing structures are to be removed and replaced. Traffic will be maintained using crossovers.

Note: Existing Sta. 288+19.02 = Proposed Sta. 288+12.36.

No Salvage

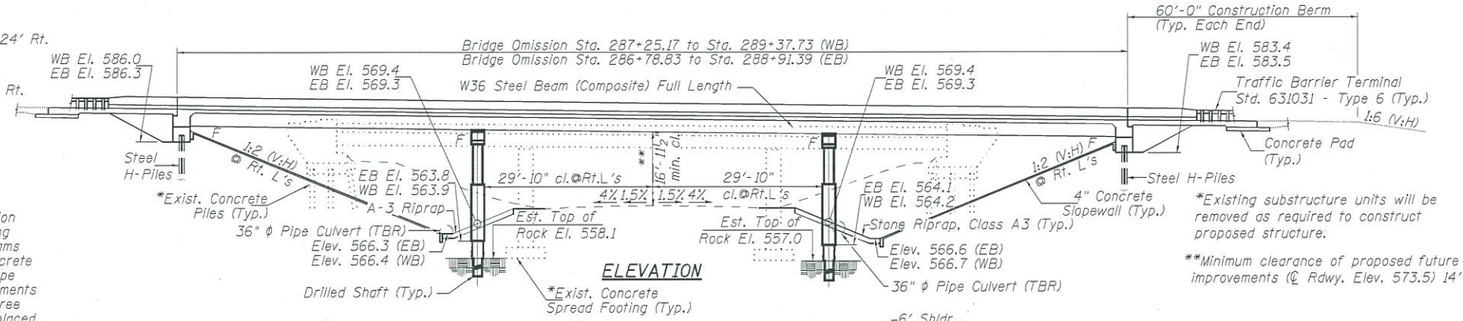

ELEVATION

*Existing substructure units will be removed as required to construct proposed structure.

**Minimum clearance of proposed future improvements (℄ Rdwy. Elev. 573.5) 14'-9".

TOP OF ROAD ELEVATIONS

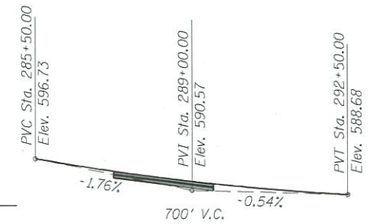

PROFILE GRADE - WBL
(Along median edge of pavement I-80 WBL)

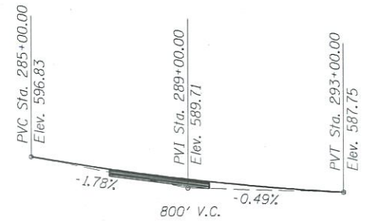

PROFILE GRADE - EBL
(Along median edge of pavement I-80 EBL)

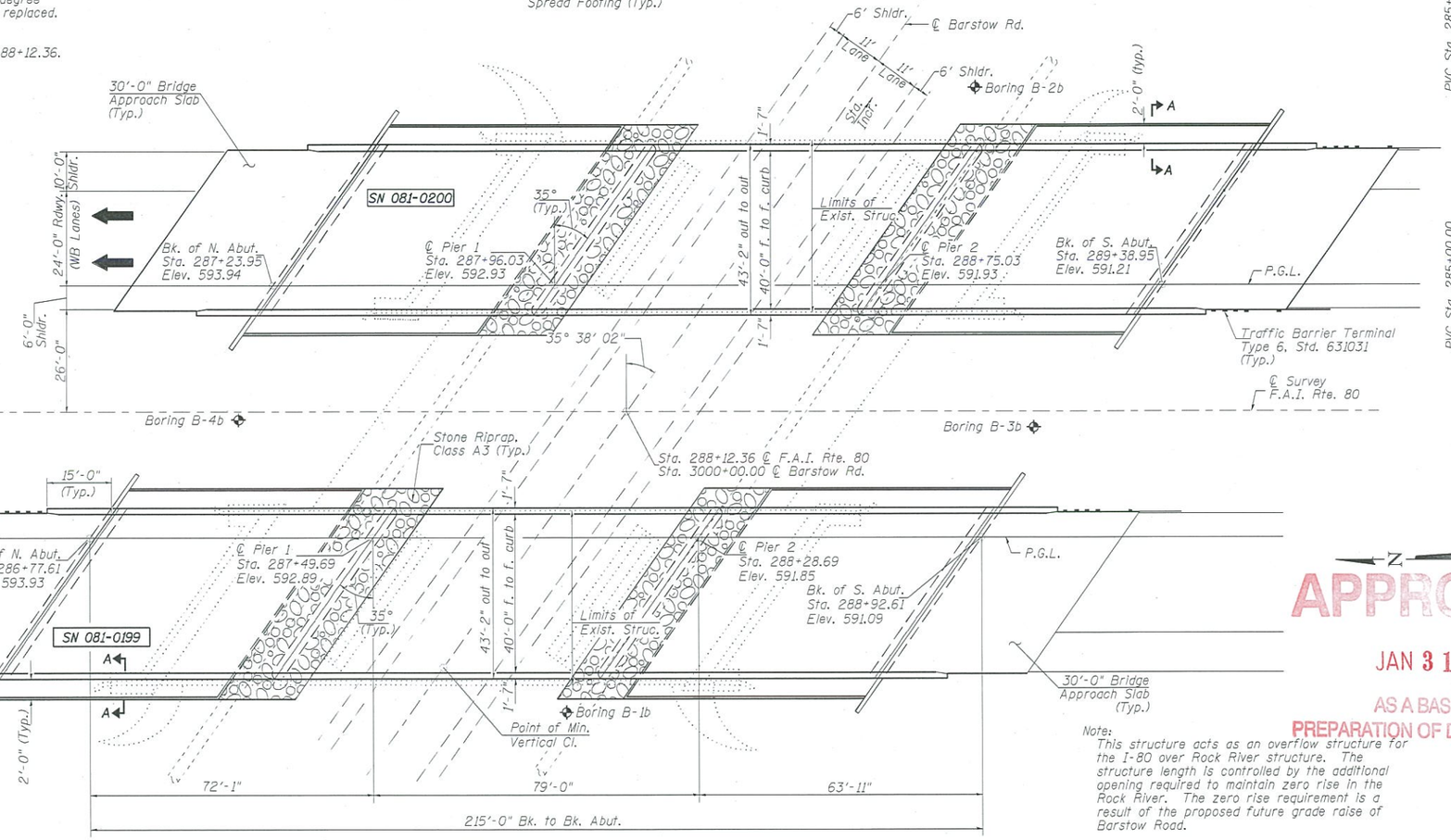

PLAN

Note:
This structure acts as an overflow structure for the I-80 over Rock River structure. The structure length is controlled by the additional opening required to maintain zero rise in the Rock River. The zero rise requirement is a result of the proposed future grade raise of Barstow Road.

APPROVED
JAN 31 2014
AS A BASIS FOR
PREPARATION OF DETAILED PLANS

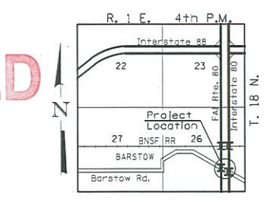

LOCATION SKETCH

HIGHWAY CLASSIFICATION

FAI 80 - I-80
Functional Class: Principal Arterial
ADT: 12,693 (2013) (one way)
18,861 (2033) (one way)
DHV: 1,886 (2033) (one way)
ADTT: 7,092 (2033)
Design Speed: 70 mph
Posted Speed: 65 mph
Directional Distribution: 50:50

FAS 2204 - Barstow Road (CH 4)
Functional Class: Minor Arterial
ADT: 345 (2013)
513 (2033)
DHV: 51 (2033)
ADTT: 26 (2033)
Design Speed: 50 mph
Posted Speed: N/A
Directional Distribution: 50:50

LOADING HL-93

Allow 50#/sq. ft. future wearing surface.

DESIGN SPECIFICATIONS

2012 AASHTO LRFD Bridge Design Specifications 6th Edition w/ 2013 Interims

DESIGN STRESSES

FIELD UNITS

f'c = 3,500 p.s.i.
fy = 60,000 p.s.i. (Reinforcement)
fy = 50,000 p.s.i. (M270 Grade 50)

SEISMIC DATA

Seismic Performance Zone (SPZ) = 1
Design Spectral Acceleration at 1.0 sec. (S_{D1}) = 0.062g
Design Spectral Acceleration at 0.2 sec. (S_{DS}) = 0.098g
Soil Site Class = C

GENERAL PLAN
I-80 OVER BARSTOW RD. (CH 4)
ROCK RIVER OVERFLOW
F.A.I. 80 SECTION 81-1HBR-1
ROCK ISLAND COUNTY
STATION 288+12.36
STR. NO. 081-0199 (EB)
STR. NO. 081-0200 (WB)

Hutchison Engineering, Inc.
Jacksonville, Peoria & Shorewood, Illinois

USER NAME = nholmer	DESIGNED - NPH	REVISED -	
PLOT SCALE = NONE	CHECKED - BAN	REVISED -	
PLOT DATE =	DRAWN - NPH	REVISED -	
	CHECKED - BAN	REVISED -	

STATE OF ILLINOIS
DEPARTMENT OF TRANSPORTATION

GENERAL PLAN
S.N 081-0199(EB) & S.N. 081-0200(WB)
SHEET NO. 1 OF 2 SHEETS

F.A.I. RTE.	SECTION	COUNTY	TOTAL SHEETS	SHEET NO.
80	81-1HBR-1	Rock Island	-	-
		CONTRACT NO. 64B78		
		ILLINOIS FED. AID PROJECT		

2845-BARSTOW-TSL01

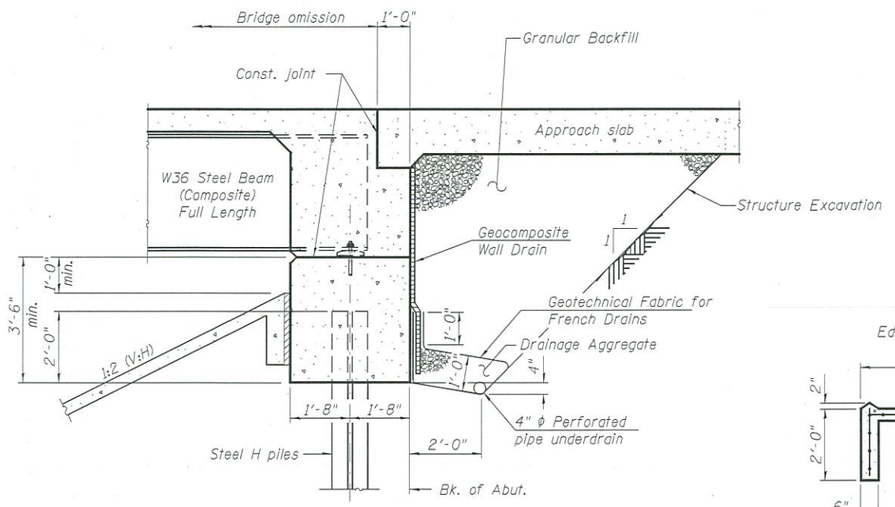

SECTION THRU INTEGRAL ABUTMENT

(Horizontal dimesions @ rt. L's)

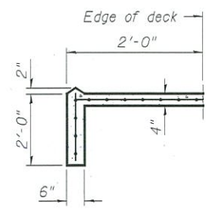

SECTION A-A

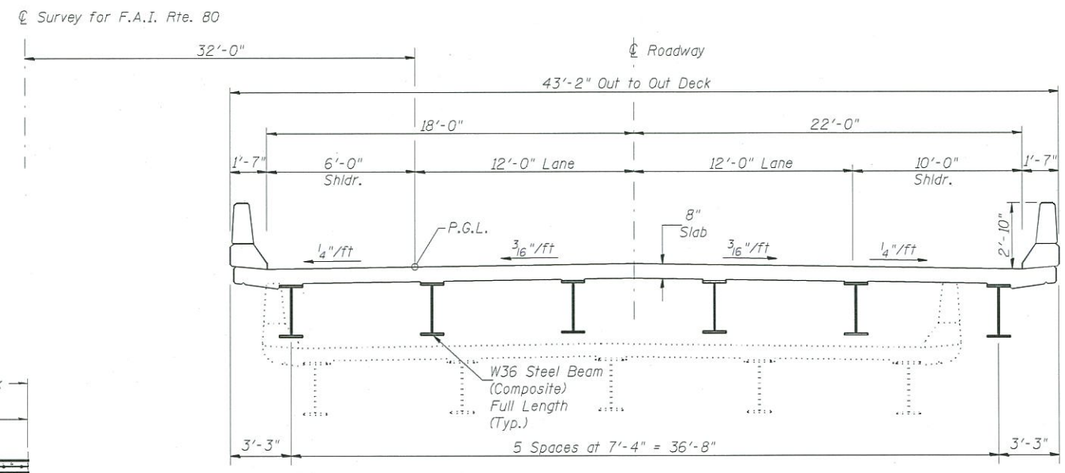

PROPOSED CROSS SECTION

Eastbound Lanes Looking South
Westbound Lanes Looking North

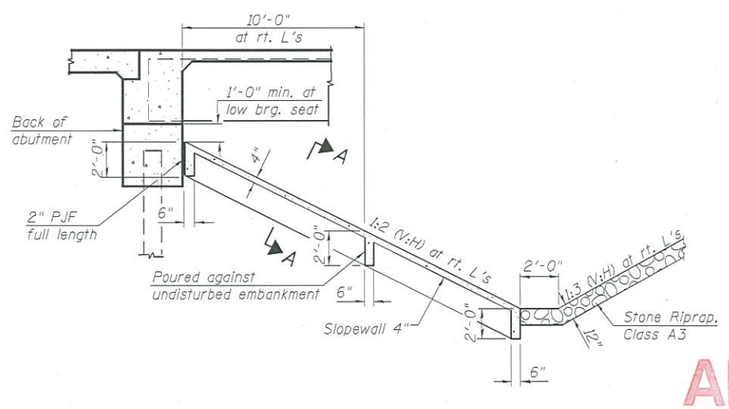

SECTION THRU
CONCRETE SLOPEWALL

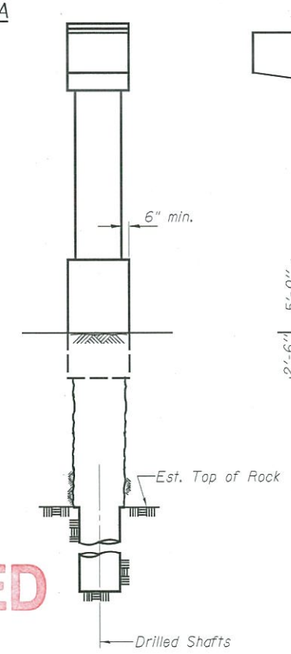

END VIEW

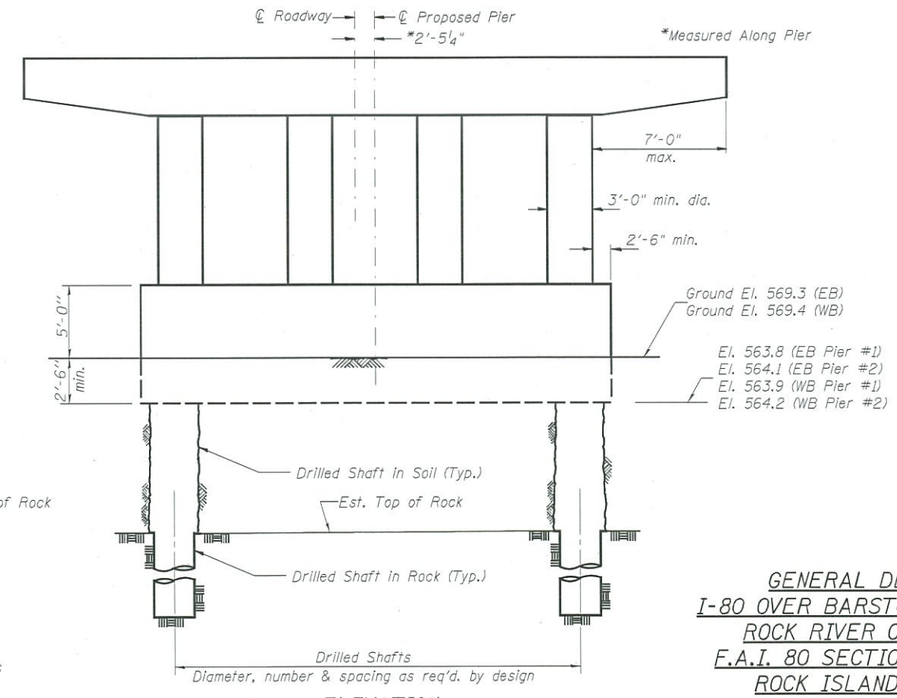

ELEVATION

PIER SKETCH

Eastbound Lanes Looking South
Westbound Lanes Looking North

APPROVED

JAN 31 2014

AS A BASIS FOR
PREPARATION OF DETAILED PLANS

GENERAL DETAILS
I-80 OVER BARSTOW RD. (CH 4)
ROCK RIVER OVERFLOW
F.A.I. 80 SECTION 81-1HBR-1
ROCK ISLAND COUNTY
STATION 288+12.36
STR. NO. 081-0199 (EB)
STR. NO. 081-0200 (WB)

Hutchison Engineering, Inc. Jacksonville, Peoria & Shorewood, Illinois	USER NAME = nholmer	DESIGNED - NPH	REVISED -	STATE OF ILLINOIS DEPARTMENT OF TRANSPORTATION	GENERAL DETAILS S.N 081-0199(EB) & S.N. 081-0200(WB)	F.A.I. RTE.	SECTION	COUNTY	TOTAL SHEETS / SHEET NO.
	PLOT SCALE = NONE	CHECKED - BAN	REVISED -			80	81-1HBR-1	Rock Island	- / -
	PLOT DATE =	DRAWN - NPH	REVISED -					CONTRACT NO. 64B78	
		CHECKED - BAN	REVISED -		SHEET NO. 2 OF 2 SHEETS		ILLINOIS	FED. AID PROJECT	

2845-BARSTOW-TSL02