B.M. #53: Chiseled square on south end of conc. wingwall near S.E. corner of IL 157 bridge S.N. 082-0088, Elev. 458.50.

EXISTING STRUCTURE: S.N. 082-0088, originally constructed in 1935 as SBI Rte. 157 Sec. 119, steel beams with concrete deck, 7 spans, 477'-2" back-back abuts, pedestal abuts on timber piles, multi-column piers with footings on timber piles. In 1963 the bridge was widened for ramp taper. In 1987 the bridge deck was replaced and substructures repaired, out-out width varies 66'-11" to 71'-11".

Bridge to be closed and traffic detoured during construction.
No salvage.

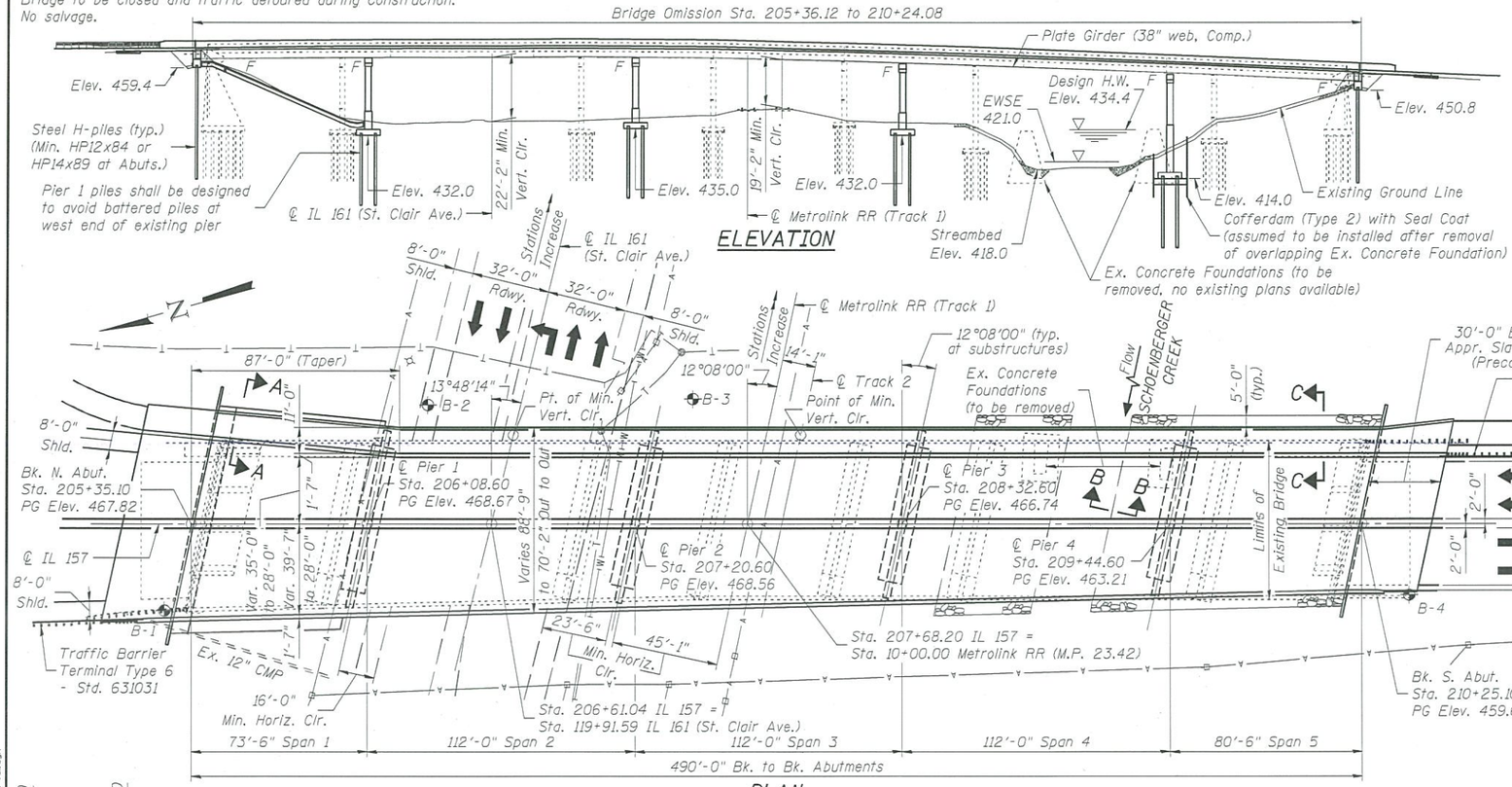

PLAN

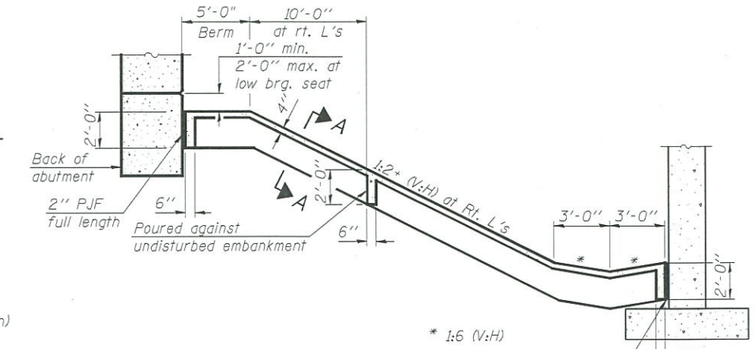

SECTION THRU
CONCRETE SLOPEWALL
(NORTH ABUTMENT ONLY)

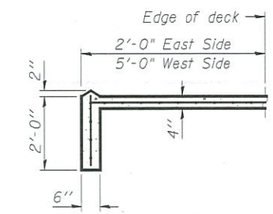

SECTION A-A

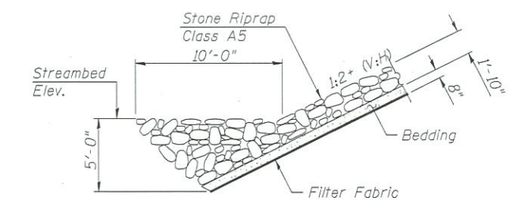

SECTION B-B

SECTION C-C

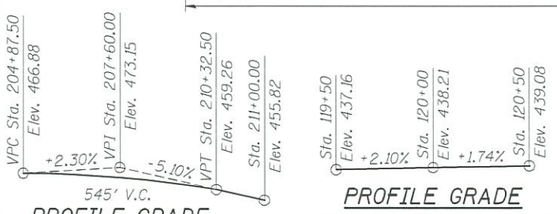

PROFILE GRADE
IL 157

PROFILE GRADE
IL 161 (St. Clair Ave.)

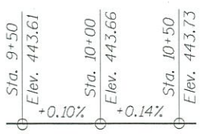

PROFILE GRADE
METROLINK RAILROAD
(High Rail-Track 2)

APPROVED
FEB 0 6 2014
AS A BASIS FOR
PREPARATION OF DETAILED PLANS

DESIGN SCOUR ELEVATION TABLE

Design Scour Elevations (ft.)						
	N. Abut.	Pier 1	Pier 2	Pier 3	Pier 4	S. Abut.
Q100	459.4	432.0	435.0	432.0	414.0	450.8
Q500	459.4	432.0	435.0	432.0	413.5	450.8

WATERWAY INFORMATION

Existing Low Grade Elevation: 458.0 @ Sta. 210+20

Drainage Area = 12.0 sq. mi.		Prop. Low Grade Elevation: 458.0 @ Sta. 210+20						
Flood	Freq. Yr.	Q * C.F.S.	Opening Sq. Ft. Exist.	Opening Sq. Ft. Prop.	Nat. H.W.E.	Head - Ft. Exist.	Head - Ft. Prop.	Headwater El. Exist.	Headwater El. Prop.
	10	4610	535	625	431.6	0.8	0.4	432.4	432.0
Design	50	7430	701	825	434.4	1.9	0.6	436.3	435.0
Base	100	8860	803	932	435.6	2.7	0.7	438.3	436.3
Overtopping	--	--	--	--	--	--	--	--	--
Max. Calc.	500	11860	997	1129	437.7	4.6	0.8	442.3	438.5

* Discharge (Q) values taken from FEMA FIS 2008

HIGHWAY CLASSIFICATION

Route: FAP 592 (IL 157)
Functional Class: Other Principal Arterial
ADT: 10700 (2011); 13600 (2035)
ADTT (5.1%): 550 (2011); 690 (2035)
DHV: 1380 (2035) Two-way
Design Speed: 45 mph
Posted Speed: 45 mph
Two-way Traffic
Directional Distribution: 51%

Route: St. Clair Ave. (IL 161)
Functional Class: Other Principal Arterial
ADT: 15900 (2011); 20200 (2035)
ADTT (5.1%): 810 (2011); 1030 (2035)
DHV: 2290 (2035) Two-way
Design Speed: 40 mph
Posted Speed: 40 mph
Two-way Traffic
Directional Distribution: 71%

LOADING HL-93

Allow 50#/sq. ft. for future wearing surface.

DESIGN SPECIFICATIONS

2012 AASHTO LRFD Bridge Design Specifications,
6th Edition, with 2013 Interims

DESIGN STRESSES

FIELD UNITS

f'c = 3,500 psi
fy = 60,000 psi (Reinforcement)
fy = 50,000 psi (M270 Grade 50)

SEISMIC DATA

Seismic Performance Zone (SPZ) = 3
Design Spectral Acceleration at 1.0 sec. (SD1) = 0.36g
Design Spectral Acceleration at 0.2 sec. (SDS) = 0.78g
Soil Site Class = E

Range 9W - 3rd P.M.

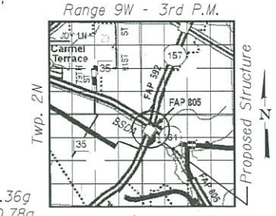

LOCATION SKETCH

GENERAL PLAN & ELEVATION
IL 157 OVER ST. CLAIR AVE.,
METROLINK RR & SCHOENBERGER CREEK
F.A.P. RTE. 592 SEC. 119-1BR-1
ST. CLAIR COUNTY
STATION 206+61.04
STRUCTURE NO. 082-0399

FILE NAME = ...\0820399-76E62-001-gplan-tsl.dgn	USER NAME = DCD	DESIGNED -	REVISED -
		CHECKED -	REVISED -
Johnson, Depp & Quisenberry CONSULTING ENGINEERS Springfield, Illinois	PLOT SCALE =	DRAWN - P. Ray	REVISED -
	PLOT DATE = 11/15/2013 18:20:51	CHECKED - DCD	REVISED -

STATE OF ILLINOIS
DEPARTMENT OF TRANSPORTATION

GENERAL PLAN & ELEVATION
STRUCTURE NO. 082-0399
SHEET NO. 1 OF 2 SHEETS

F.A.P. RTE.	SECTION	COUNTY	TOTAL SHEETS	SHEET NO.
592	119-1BR-1	ST. CLAIR		
	STA. 206+61.04	CONTRACT NO. 76E62		
		ILLINOIS FED. AID PROJECT		

FILE: J:\DD\10205 IL157 St Clair Ave PhIV-SN082008\TSL\0820399-76E62-001-gplan-tsl.dgn
SAVE DATE: 11/15/2013

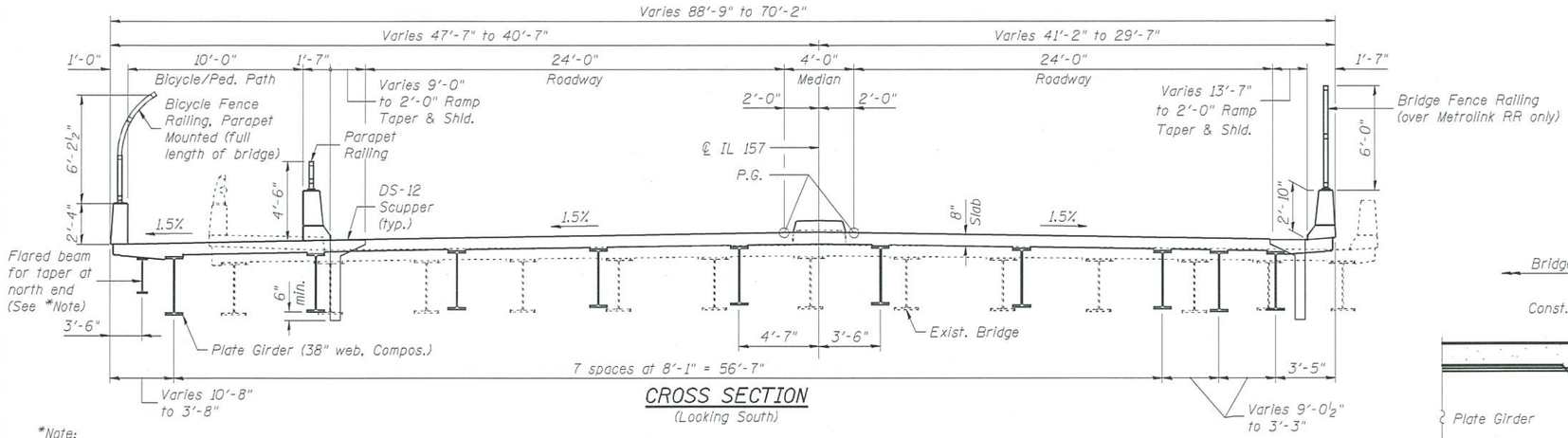

CROSS SECTION
(Looking South)

*Note:
End of flared beam is assumed to be supported at Pier 1 on a bracket attached to main girder bearing stiffener

APPROVED
FEB 0 6 2014
AS A BASIS FOR
PREPARATION OF DETAILED PLANS

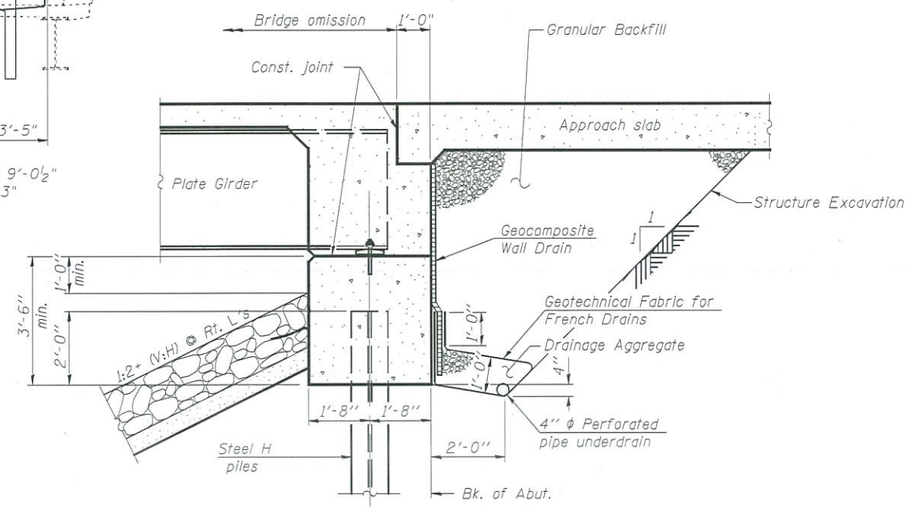

SECTION THRU INTEGRAL ABUTMENT
(Horiz. dim. @ Rt. L's)

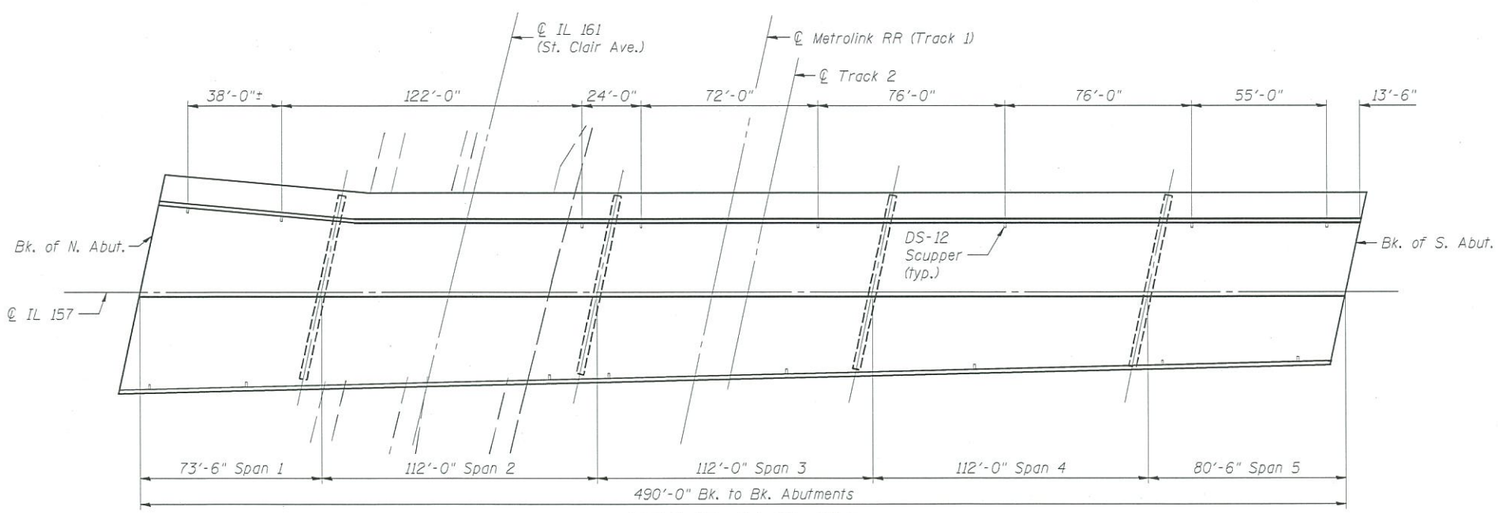

DECK DRAIN SPACING
(Measured parallel to ℄ Roadway)

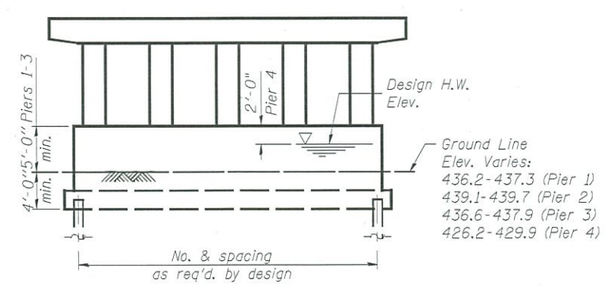

PIER SKETCH

DETAILS
IL 157 OVER ST. CLAIR AVE.,
METROLINK RR & SCHOENBERGER CREEK
F.A.P. RTE. 592 SEC. 119-1BR-1
ST. CLAIR COUNTY
STATION 206+61.04
STRUCTURE NO. 082-0399

FILE: J:\JDD\110205 IL157 St Clair Ave Phl\-SN0820088\TSL\0820399-76E62-001-gplan-tsl.dgn
SAVE DATE: 11/15/2013

FILE NAME = ...\0820399-76E62-001-gplan-tsl.dgn	USER NAME = DCD	DESIGNED -	REVISED -	STATE OF ILLINOIS DEPARTMENT OF TRANSPORTATION	DETAILS STRUCTURE NO. 082-0399	F.A.P. RTE. 592	SECTION 119-1BR-1	COUNTY ST. CLAIR	TOTAL SHEETS / SHEET NO.
Johnson, Depp & Quisenberry CONSULTING ENGINEERS Springfield, Illinois	PLOT SCALE =	CHECKED -	REVISED -			STA. 206+61.04		CONTRACT NO. 76E62	
	PLOT DATE = 11/15/2013 18:24:37	DRAWN - P. Ray	REVISED -		SHEET NO. 2 OF 2 SHEETS	ILLINOIS FED. AID PROJECT			
		CHECKED - DCD	REVISED -						