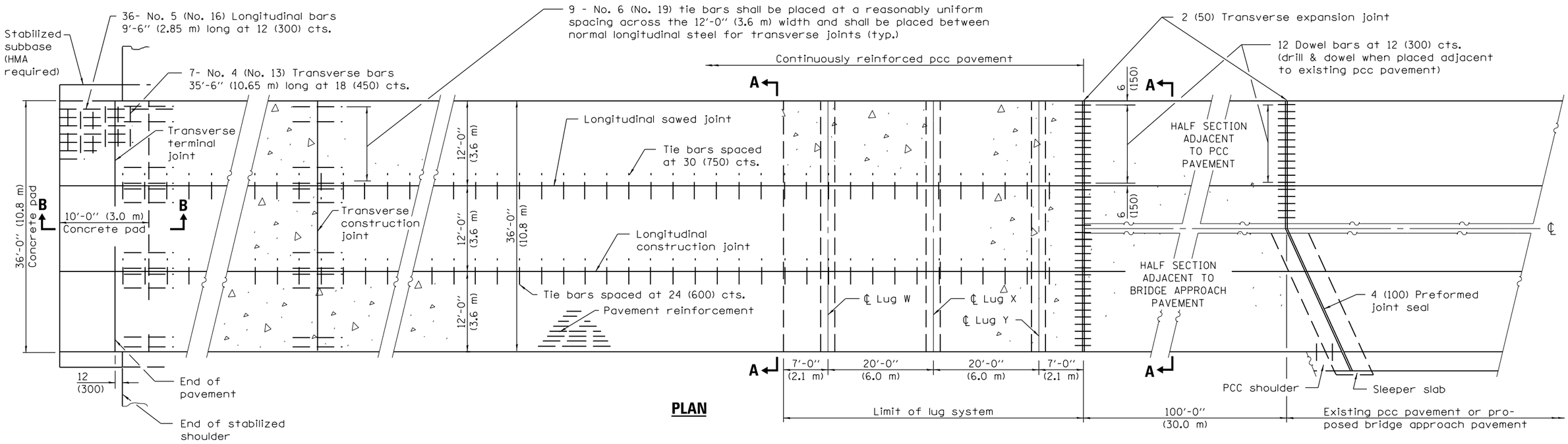

PLAN

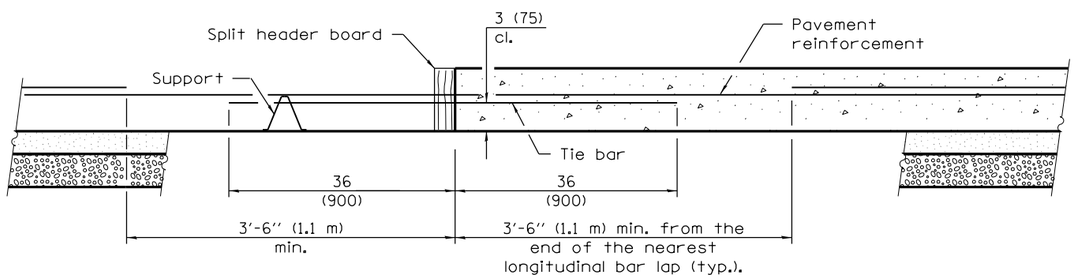

TRANSVERSE CONSTRUCTION JOINT

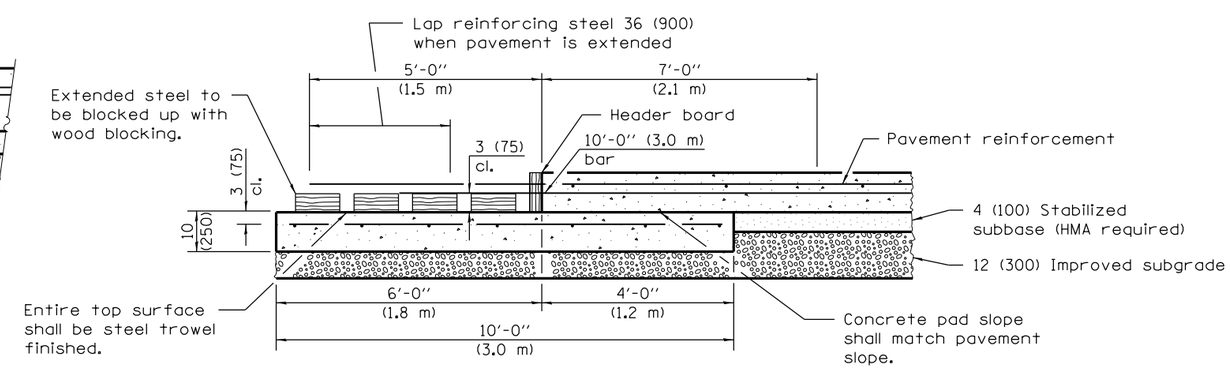

TRANSVERSE TERMINAL JOINT
SECTION B–B

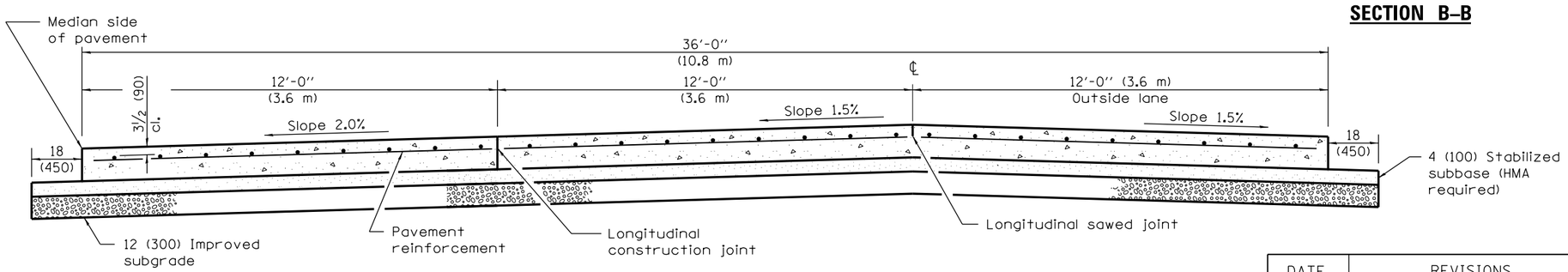

SECTION A–A
(TYPICAL 3-LANE, 1-WAY WITH SHOULDERS)

GENERAL NOTES

See Standard 421001 for details of pavement reinforcement.

See Standards 420001 and 420401 for joint details not shown.

All dimensions are in inches (millimeters) unless otherwise shown.

Illinois Department of Transportation

PASSED January 1, 2008
ENGINEER OF POLICY AND PROCEDURES
APPROVED January 1, 2008
ENGINEER OF DESIGN AND ENVIRONMENT

ISSUED 1-1-97

DATE	REVISIONS
1-1-08	Switched units to
	English (metric). Revised
	Lug Sys. Table.
1-1-07	Switched to Hot-Mix
	Asphalt (HMA)
	terminology.

36' (10.8 m) CRC PAVEMENT
(WITH LUG SYSTEM)

(Sheet 1 of 2)

STANDARD 421206–06

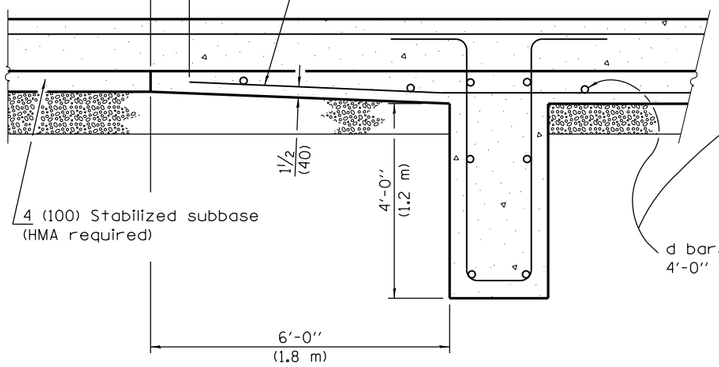

SECTION AT LUG W

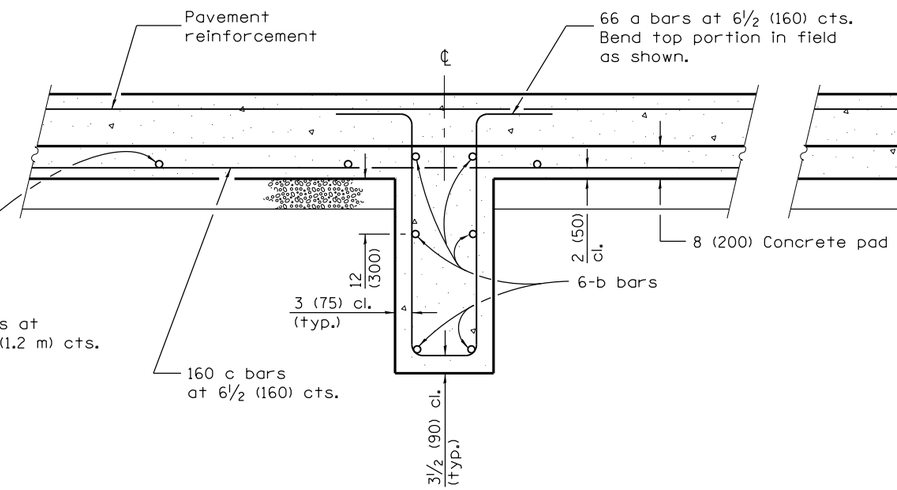

SECTION AT LUG X

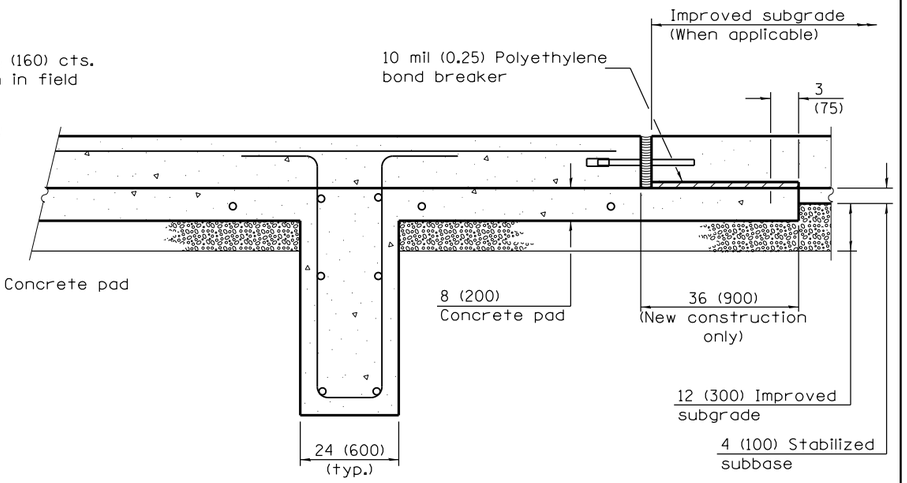

SECTION AT LUG Y

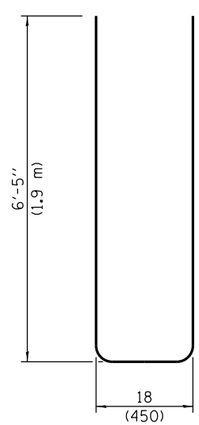

BAR a

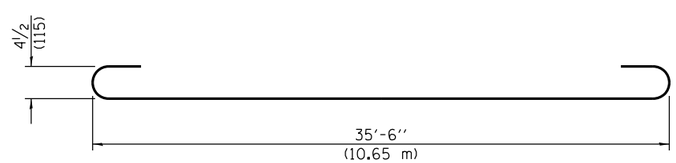

BAR b

MATERIALS REQUIRED FOR (1) ONE LUG SYSTEM
(Excluding Pavement Concrete and Pavement Reinforcement)

Bar	No.	Size	Length	Shape
a	198	No. 8 (No. 25)	14'-0" (4.25 m)	
b	18	No. 5 (No. 16)	36'-9" (11.30 m)	
c	198	No. 5 (No. 16)	20'-0" (6.10 m)	
d	42	No. 4 (No. 13)	11'-9" (3.52 m)	

Concrete, cu. yds. (m^3)	96.0 (73.4)
Reinforcing Bars, lbs. (kg)	12,550 (5695)
Concrete Pad, sq. yds. (m^2)	216 (181)
Improved Subgrade, sq. yds. (m^2)	208 (174)

Illinois Department of Transportation

PASSED January 1, 2008
ENGINEER OF POLICY AND PROCEDURES
APPROVED January 1, 2008
ENGINEER OF DESIGN AND ENVIRONMENT

ISSUED 1-1-97

36' (10.8 m)
CRC PAVEMENT
(WITH LUG SYSTEM)

(Sheet 2 of 2)

STANDARD 421206–06