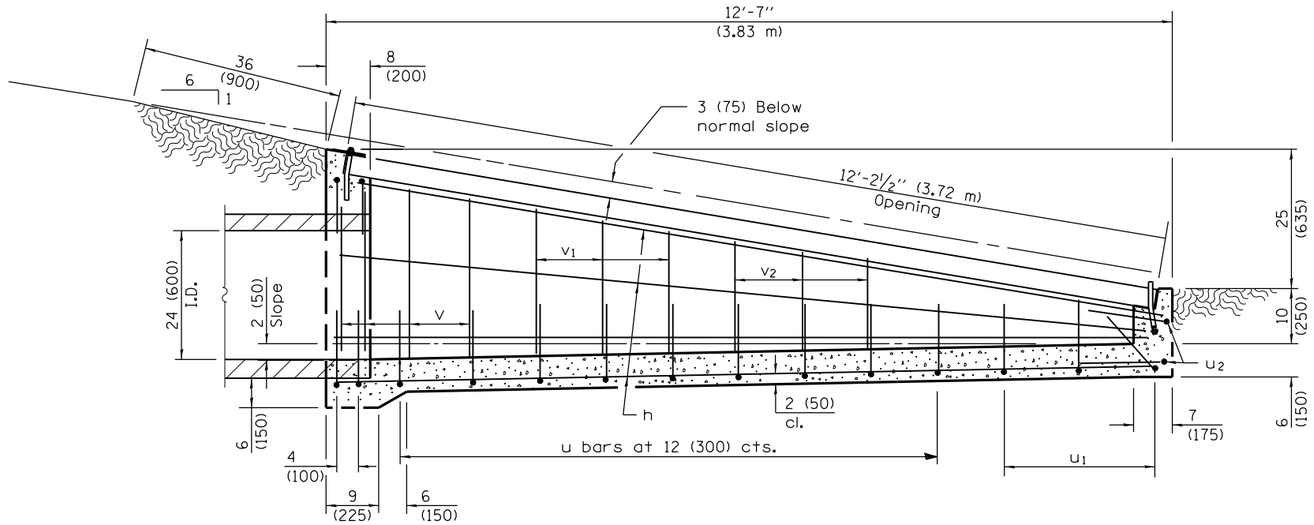

SECTION A–A

Material required for one inlet box

Bar	Qty.	Size	Length
h	10	No. 4 (No. 13)	12'-0" (3.65 m)
u	13	No. 4 (No. 13)	6'-5" (1.95 m)
u_1	3	No. 4 (No. 13)	5'-11" (1.80 m)
u_2	2	No. 4 (No. 13)	5'-10" (1.75 m)
v	8	No. 4 (No. 13)	30 (760)
v_1	6	No. 4 (No. 13)	24 (610)
v_2	6	No. 4 (No. 13)	18 (460)
Concrete		cu. yds. (m^3)	1.9 (1.45)
Reinf. Bars		lbs. (kg)	83 (183)
Galv. Steel Pipe		3½ (89) O.D.	12'-2¼" (3.71 m)

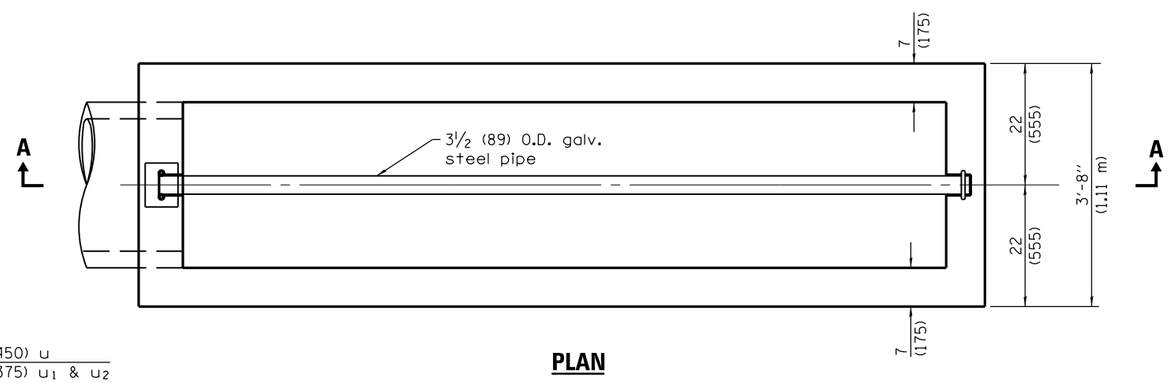

PLAN

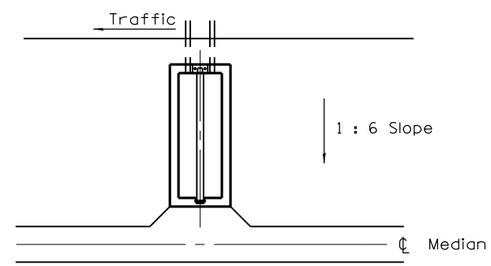

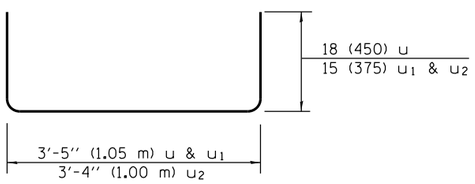

Bars u, u1 & u2

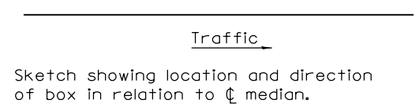

Sketch showing location and direction of box in relation to ℄ median.

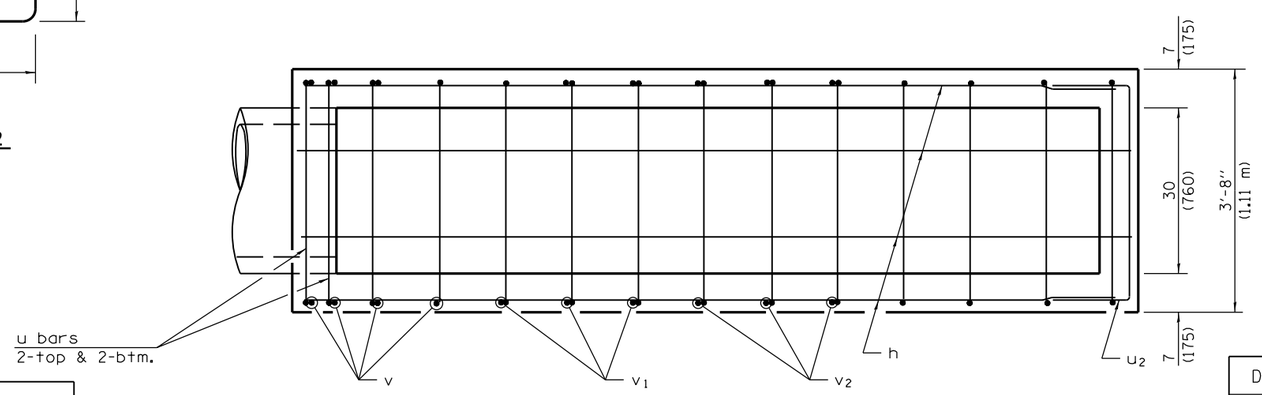

PLAN OF REINFORCEMENT

GENERAL NOTES

All slope ratios are expressed as units of vertical displacement to units of horizontal displacement (V:H).

All dimensions are in inches (millimeters) unless otherwise shown.

Illinois Department of Transportation

PASSED January 1, 2009
ENGINEER OF POLICY AND PROCEDURES
APPROVED January 1, 2009
ENGINEER OF DESIGN AND ENVIRONMENT

ISSUED 1-1-07

DATE	REVISIONS
1-1-09	Switched units to English (metric).
1-1-07	Soft converted metric reinforcement bars.

INLET BOX
TYPE 24 (600) C

(Sheet 1 of 2)

STANDARD 542511–02

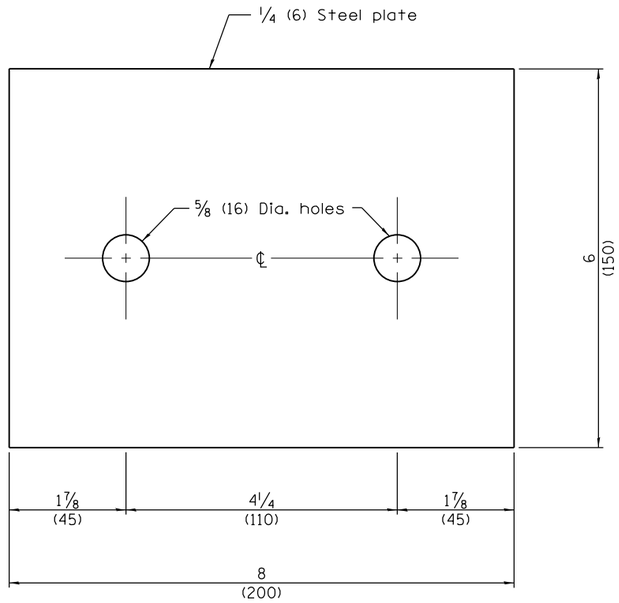

TOP ANCHOR PLATE

(1 - required)

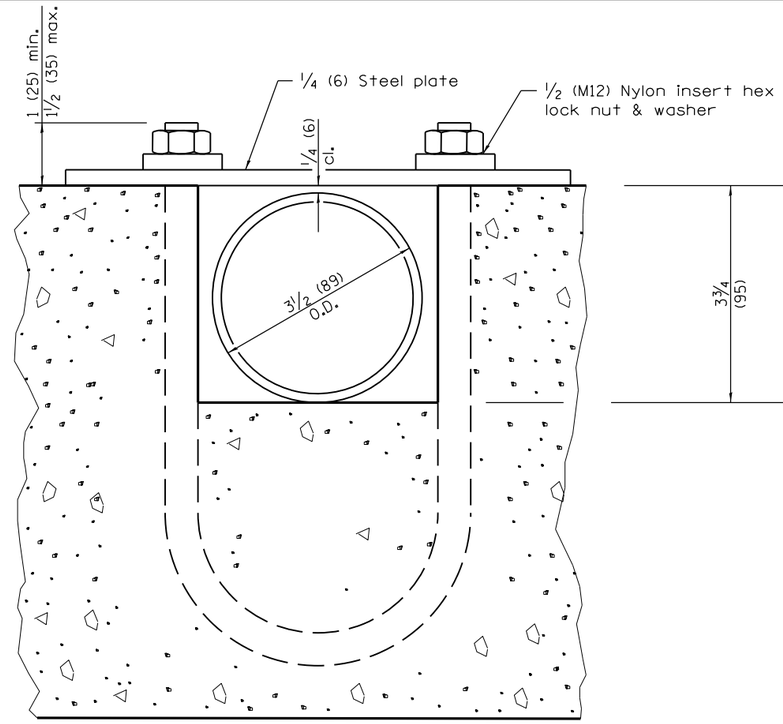

SECTION B–B

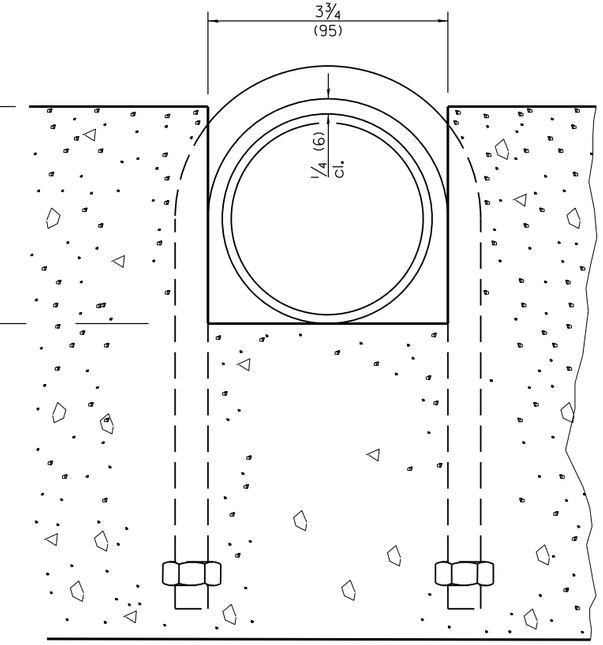

SECTION C–C

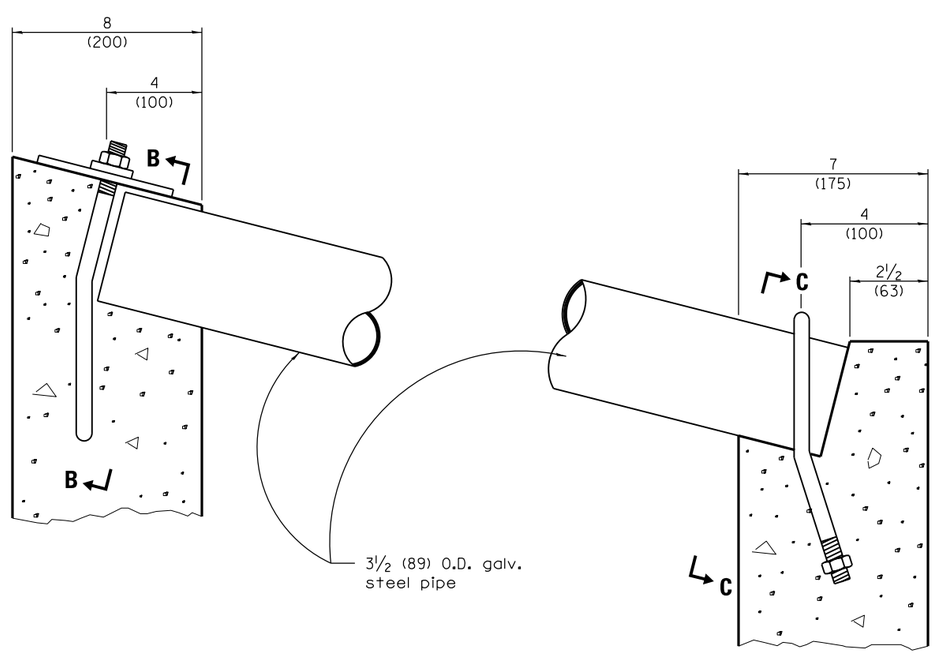

DETAIL AT BLOCKOUTS

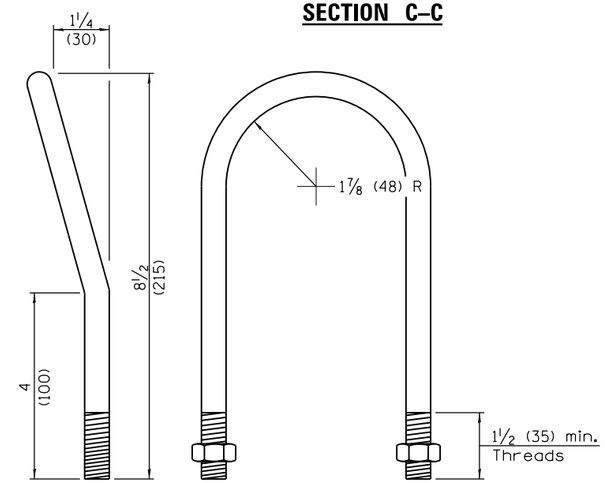

1/2 (M12) U BOLT

(2 - required)

Illinois Department of Transportation

PASSED January 1, 2009

ENGINEER OF POLICY AND PROCEDURES

APPROVED January 1, 2009

ENGINEER OF DESIGN AND ENVIRONMENT

ISSUED 1-1-97

INLET BOX
TYPE 24 (600) C

(Sheet 2 of 2)

STANDARD 542511–02