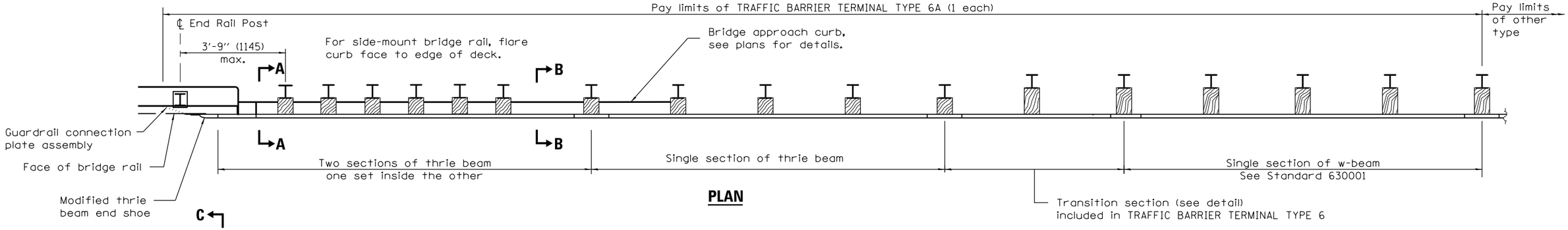

PLAN

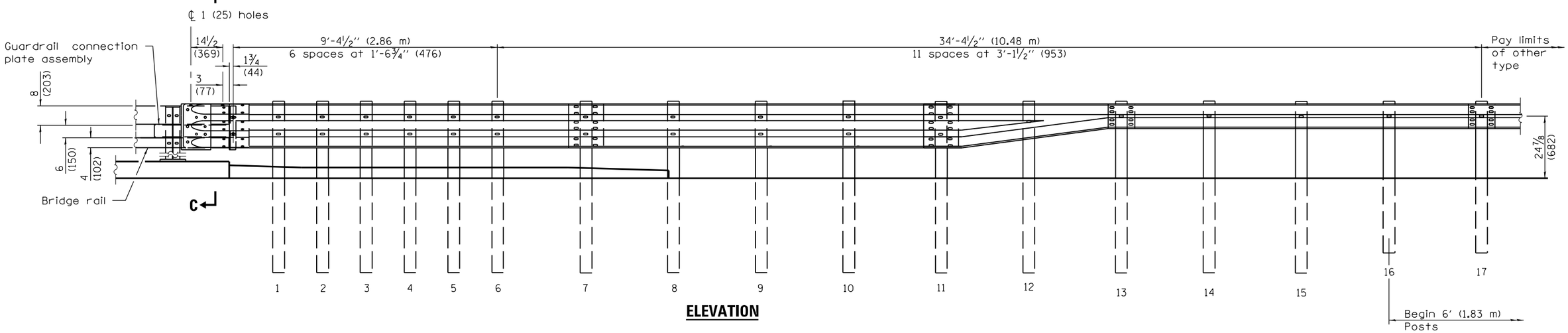

ELEVATION

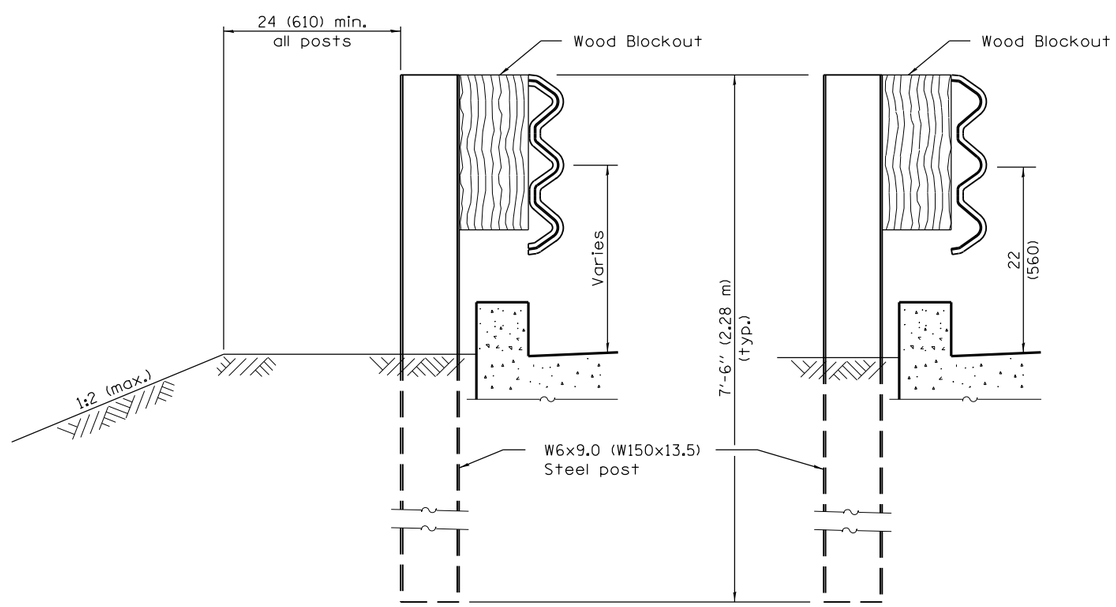

SECTION A–A **SECTION B–B**

GENERAL NOTES

This standard shows attachment to curb mounted bridge rail. Attachment to side mounted bridge rail is similar.

See Standard 630001 for details of guardrail not shown.

Thrie beam rail shall be bolted to block-out at all posts.

All slope ratios are expressed as units of vertical displacement to units of horizontal displacement (V:H).

All dimensions are in inches (millimeters) unless otherwise shown.

Illinois Department of Transportation

PASSED January 1, 2013
Michael Brand
ENGINEER OF POLICY AND PROCEDURES
APPROVED January 1, 2013
ENGINEER OF DESIGN AND ENVIRONMENT

ISSUED 1-1-2003

DATE	REVISIONS
1-1-13	Added note to see plans
	for bridge approach curb
	details.
1-1-12	Corrected curb length.

TRAFFIC BARRIER TERMINAL, TYPE 6A

(Sheet 1 of 3)

STANDARD 631032–08

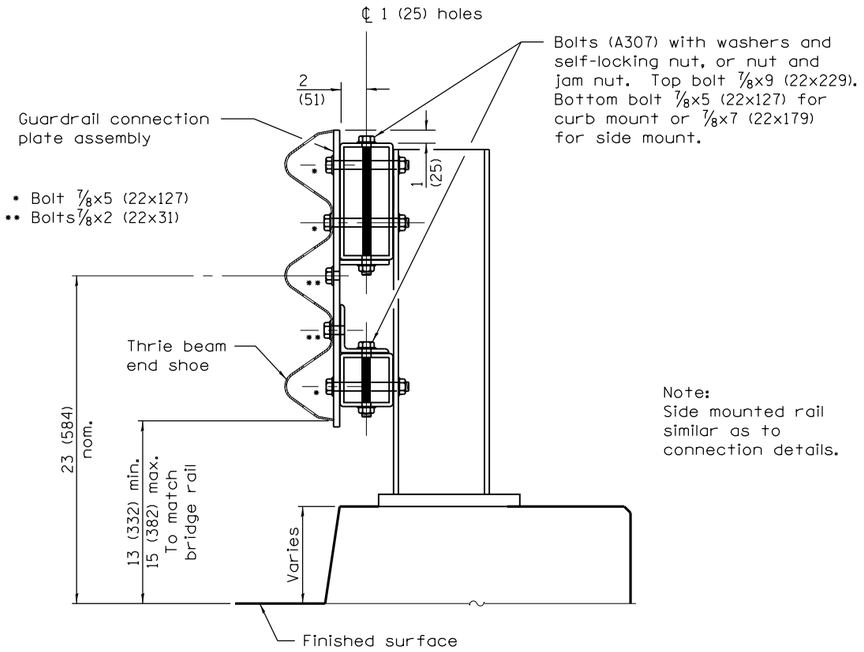

Note:
Side mounted rail similar as to connection details.

SECTION C–C

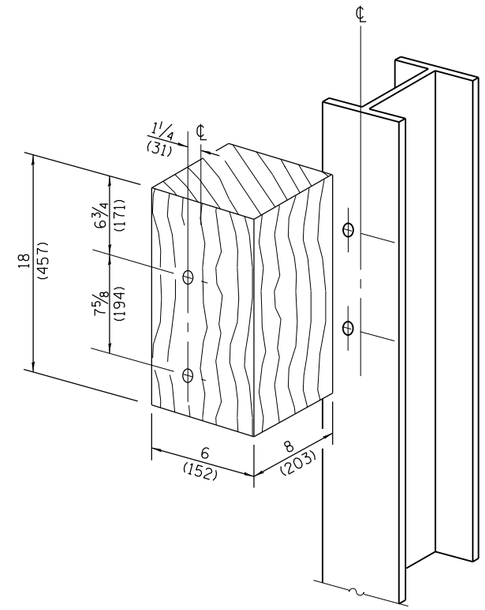

POSTS 1–11 WOOD BLOCKOUT DETAIL

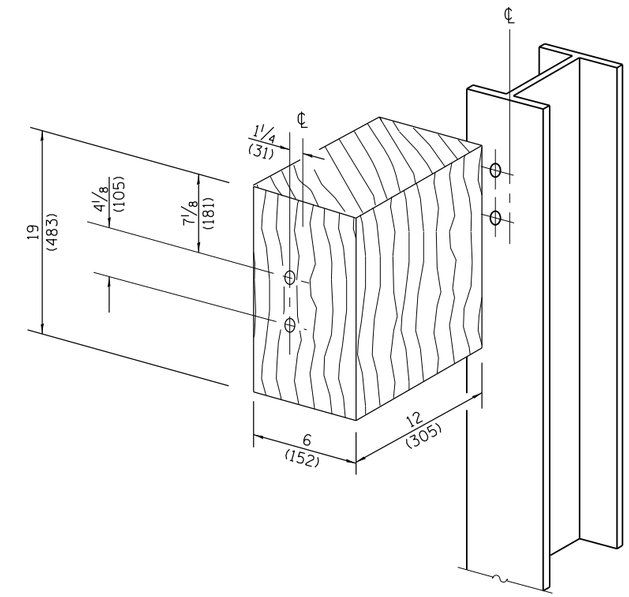

POST 12 WOOD BLOCKOUT DETAIL
(See Standard 630001 for post 13-17 blockouts.)

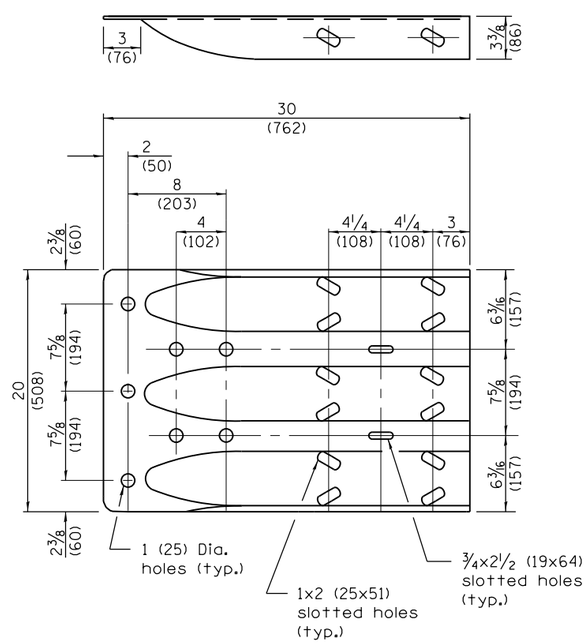

MODIFIED THRIE BEAM END SHOE DETAIL

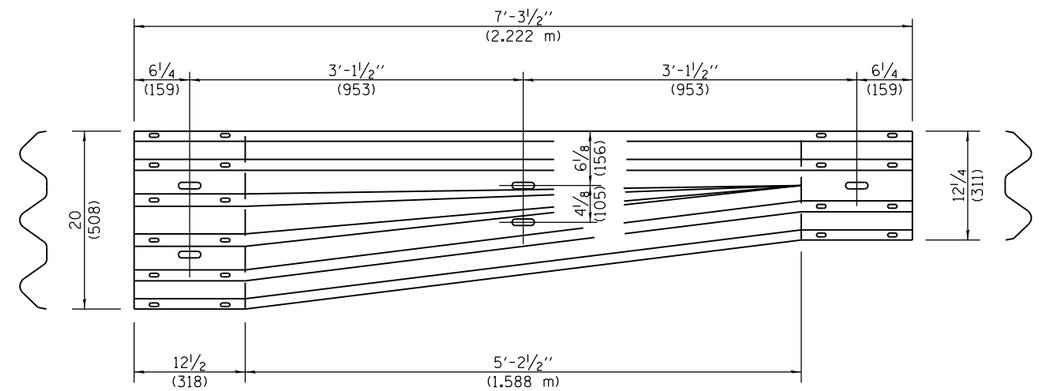

TRANSITION SECTION
(10 gauge (3.4) rail element)

Illinois Department of Transportation

PASSED January 1, 2013
Michael Brand
ENGINEER OF POLICY AND PROCEDURES

APPROVED January 1, 2013
ENGINEER OF DESIGN AND ENVIRONMENT

ISSUED 1-1-2003

TRAFFIC BARRIER TERMINAL, TYPE 6A

(Sheet 2 of 3)

STANDARD 631032–08

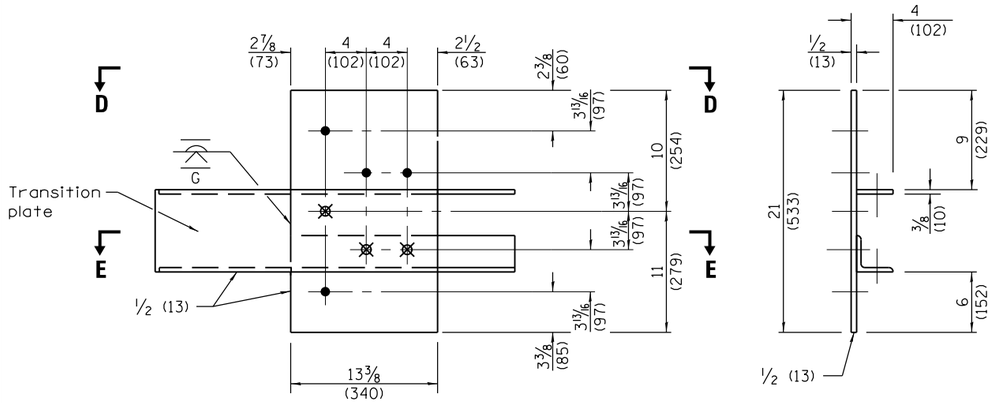

LEGEND

● ℄ 4-1 (25) holes for 7/8 (22) H.S. bolts and nuts

⊗ Drill and tap 3 holes for 7/8 (22) H.S. bolts.

Dimensions	A	B
For Curb Mounted Rail	8 3/4 (222)	3 1/2 (89)
For Side Mounted Rail	9 3/4 (247)	2 1/2 (64)

GUARDRAIL CONNECTION PLATE ASSEMBLY DETAILS

(Mirror for opposite end)

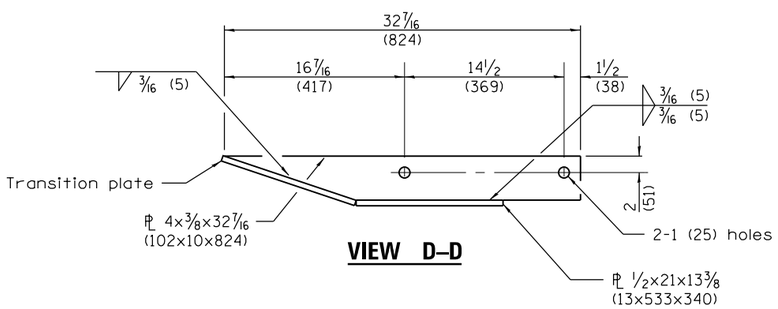

VIEW D–D

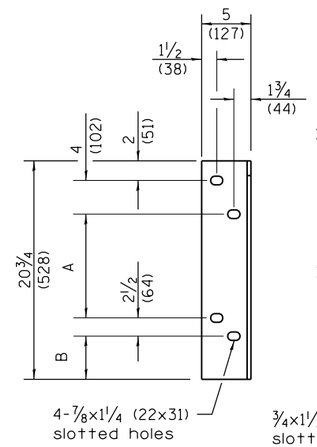

DEPARTURE END VIEW

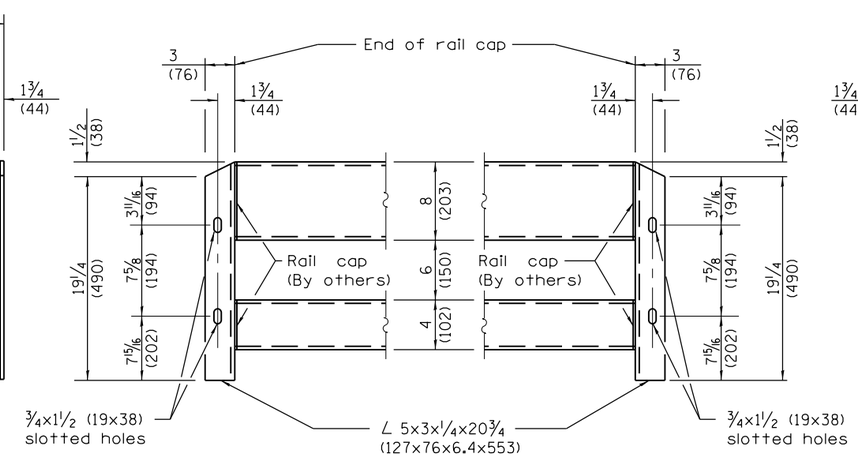

CONNECTION ANGLES

(Install angles to rail caps using 5/8 (19) washers and self-locking nuts or nuts and jam nuts, to be provided by others)

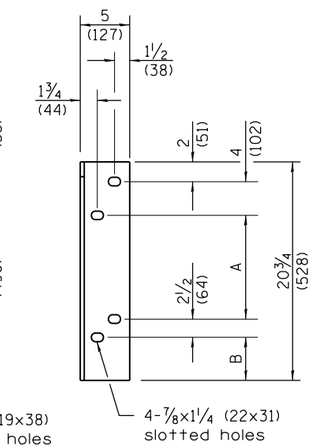

APPROACH END VIEW

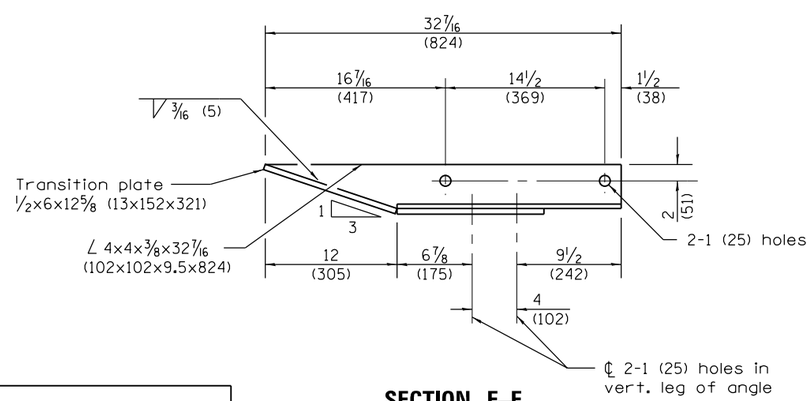

SECTION E–E

Illinois Department of Transportation

PASSED January 1, 2013

Michael Brand

ENGINEER OF POLICY AND PROCEDURES

APPROVED January 1, 2013

ENGINEER OF DESIGN AND ENVIRONMENT

ISSUED 1-1-2003

TRAFFIC BARRIER TERMINAL, TYPE 6A

(Sheet 3 of 3)

STANDARD 631032–08