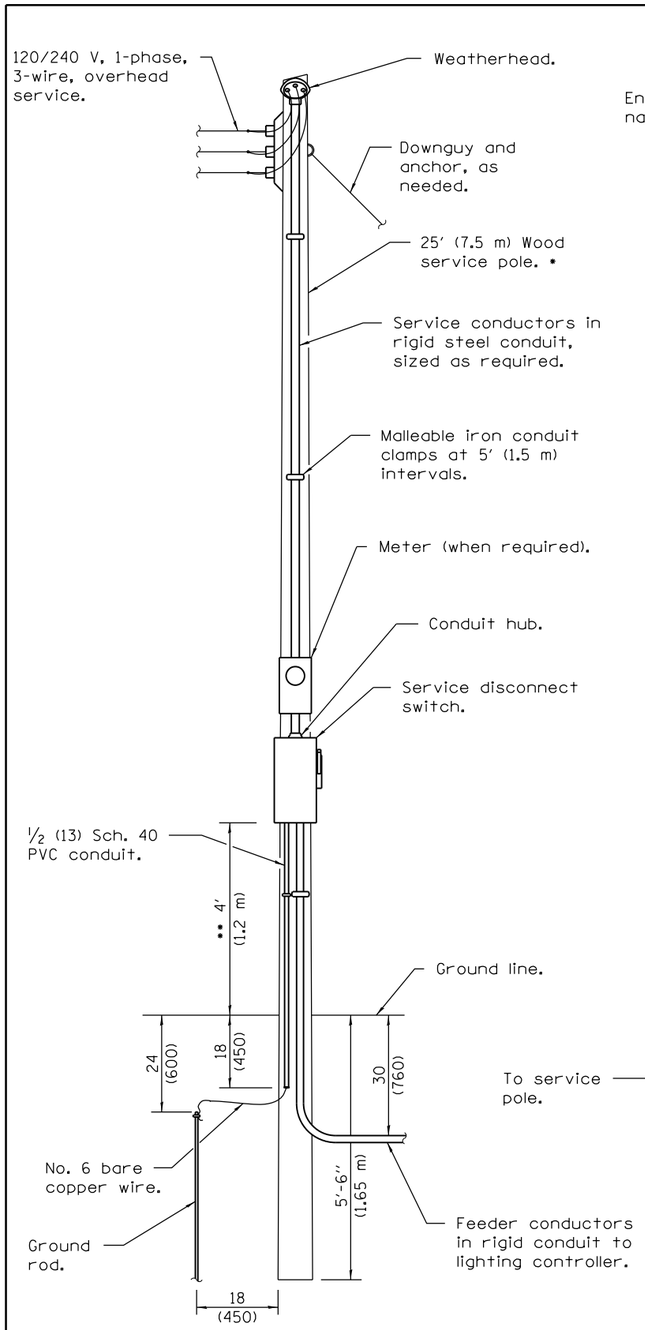

ELECTRIC SERVICE INSTALLATION

• Size larger as needed.
•• Or as directed by Utility Company.

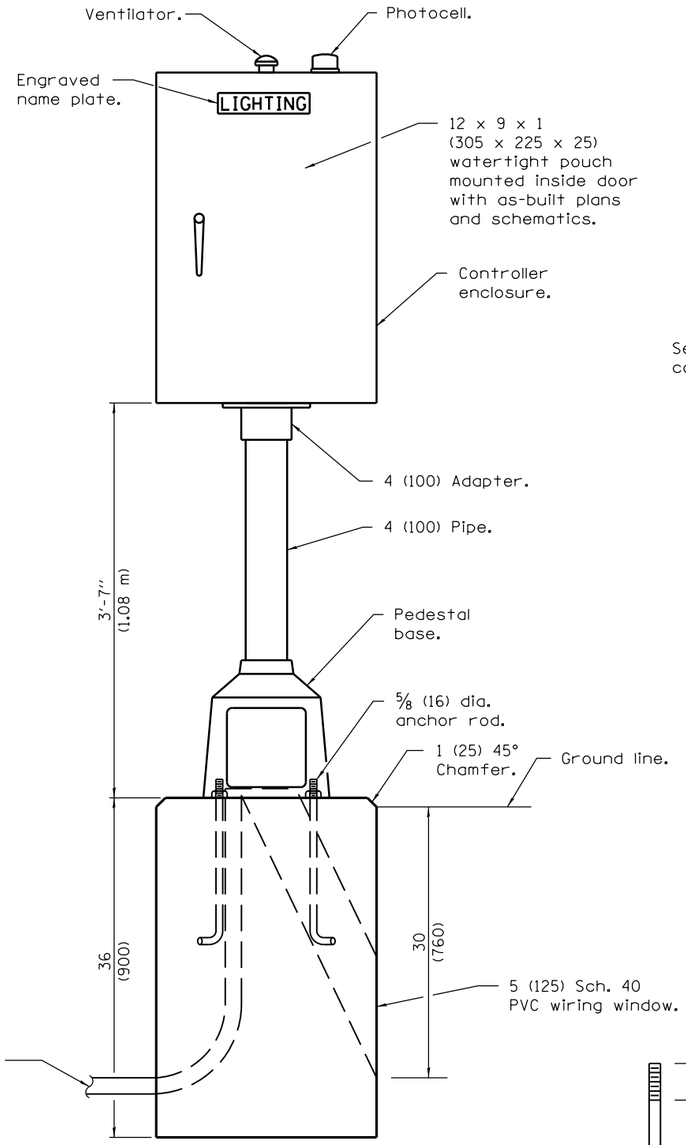

LIGHTING CONTROLLER

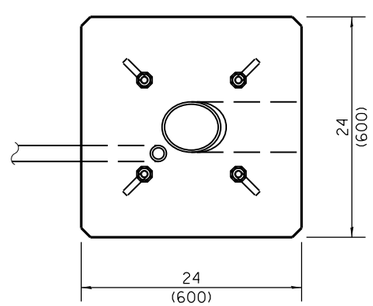

FOUNDATION (PLAN)

(Work pad not shown.)

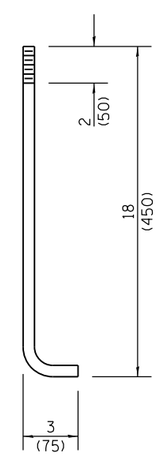

ANCHOR ROD DETAIL

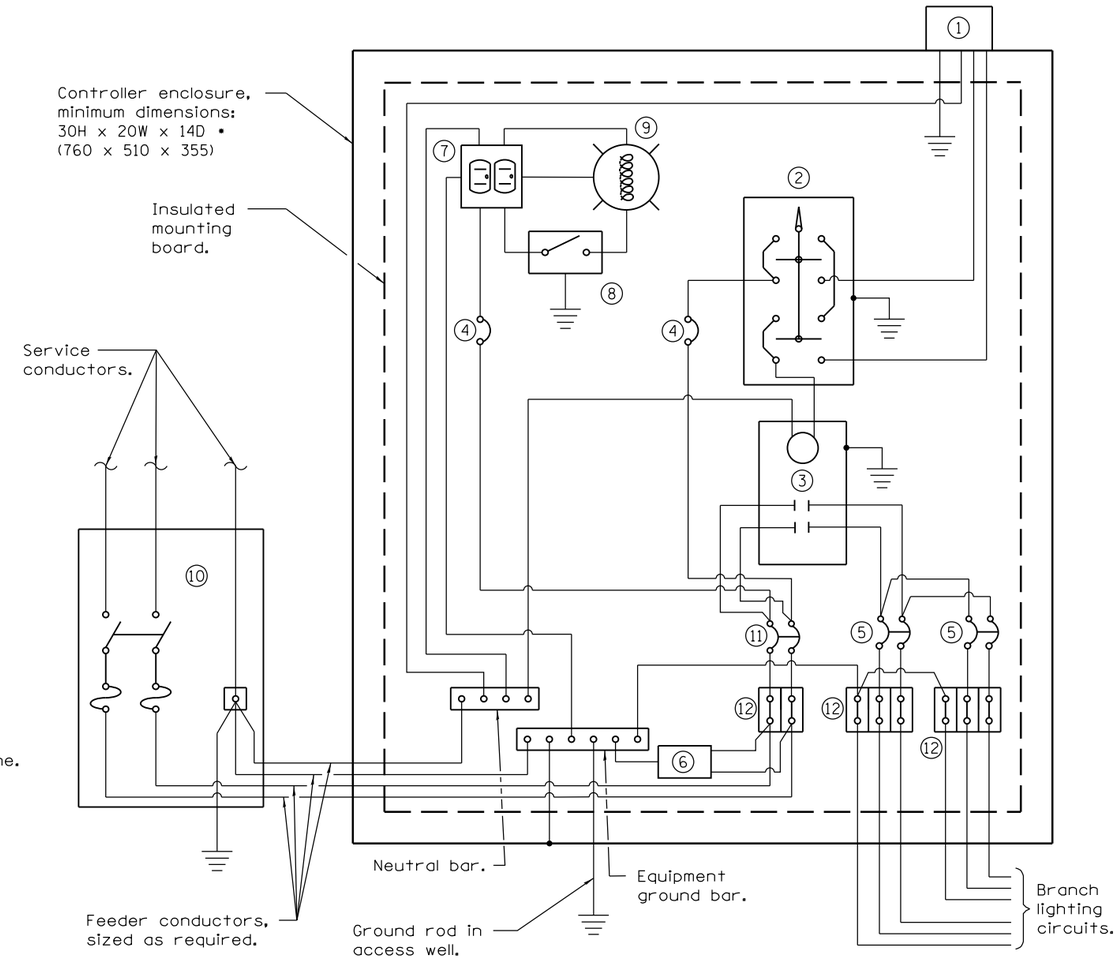

CONTROL SCHEMATIC

1. Photocell with integral surge arrester.
2. HAND-OFF-AUTO selector switch.
3. 100 amp•, electrically held contactor.
4. 15 amp, 1-pole circuit breaker.
5. 20 amp•, 2-pole circuit breaker (two spares required but not shown).
6. Surge arrester.
7. GFCI duplex receptacle.
8. Single-pole, single-throw switch.
9. Incandescent luminaire, enclosed and gasketted with 100 watt lamp.
10. Service disconnect switch - 2-pole, 3-wire, 60 amp•, fused at 60 amp•, solid neutral in NEMA 4X enclosure having lockable external handle.
11. 60 amp•, 2-pole circuit breaker.
12. Terminal block sized for conductors as shown on plans.

• Size larger as needed.

All dimensions are in inches (millimeters) unless otherwise shown.

Illinois Department of Transportation

PASSED January 1, 2015
ENGINEER OF PRELIMINARY ENGINEERING
APPROVED January 1, 2015
ENGINEER OF DESIGN AND ENVIRONMENT

ISSUED 1-1-10

DATE	REVISIONS
1-1-15	Added note 12.
1-1-12	Revised feeder burial
	depth.

LIGHTING CONTROLLER PEDESTAL MOUNTED, 240V

STANDARD 825011–03