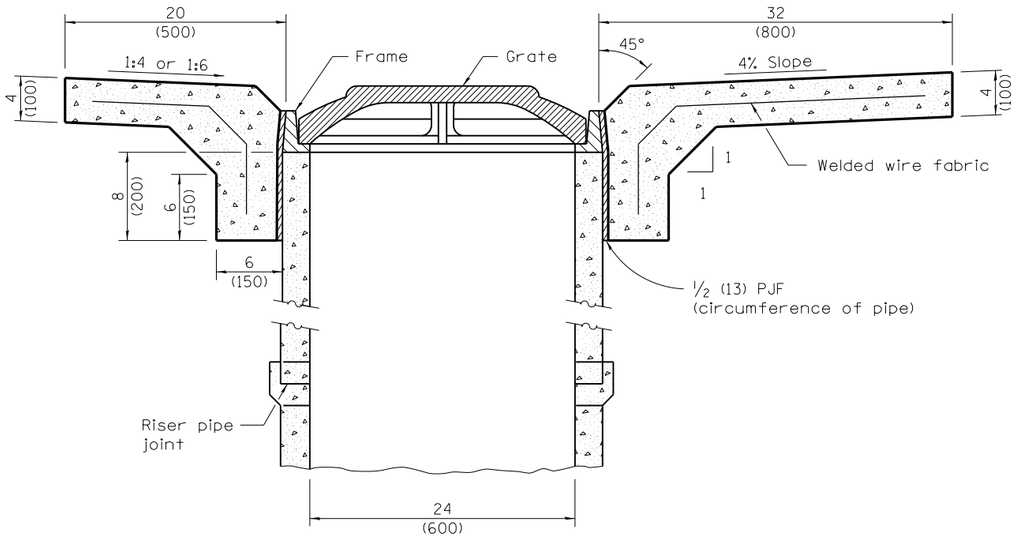

SECTION B–B

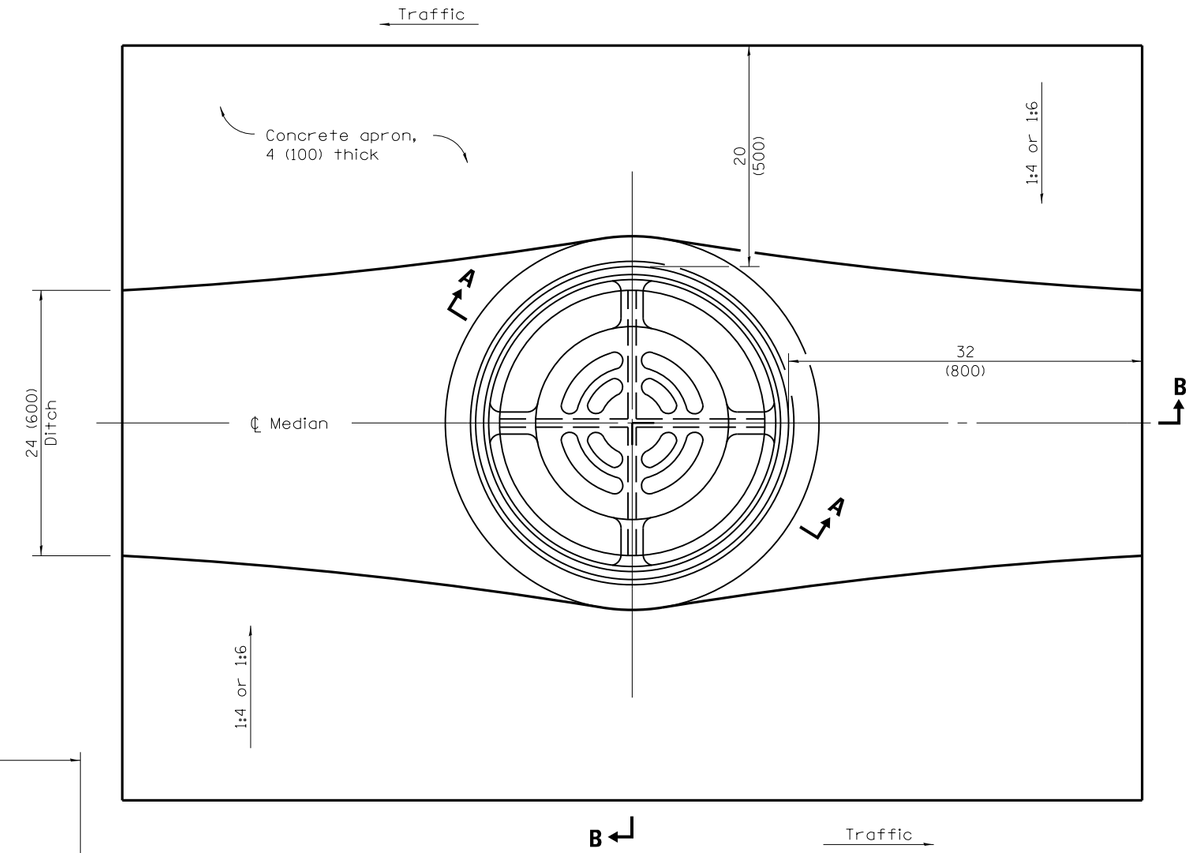

LOCATION SKETCH – PLAN

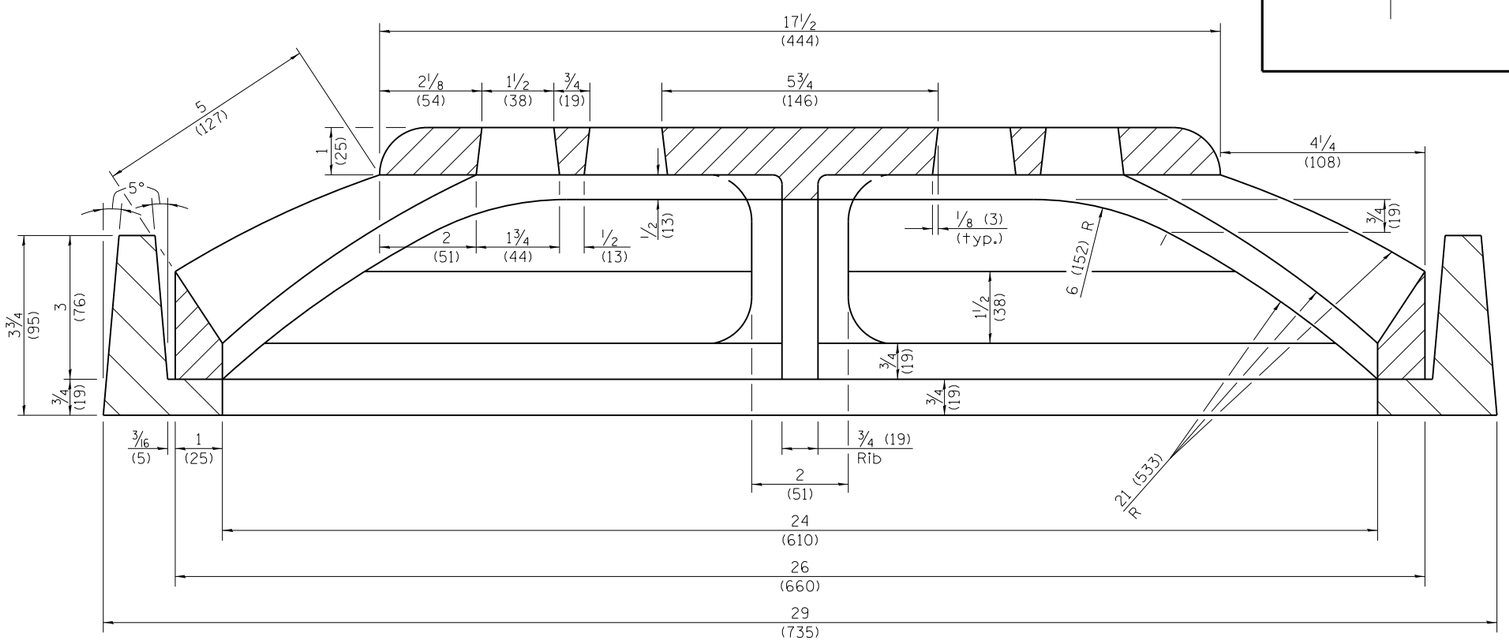

SECTION A–A

GENERAL NOTES

All slope ratios are expressed as units of vertical displacement to units of horizontal displacement (V:H).

All dimensions are in inches (millimeters) unless otherwise shown.

Illinois Department of Transportation

PASSED January 1, 2009
ENGINEER OF POLICY AND PROCEDURES
APPROVED January 1, 2009
ENGINEER OF DESIGN AND ENVIRONMENT

ISSUED 1-1-97

DATE	REVISIONS
1-1-09	Switched units to English (metric).
1-1-97	Renum. Standard 2250-3.

MEDIAN INLET for 24" (600 mm) REINFORCED CONCRETE PIPE

STANDARD 604101–01