F SHAPE DESIGN

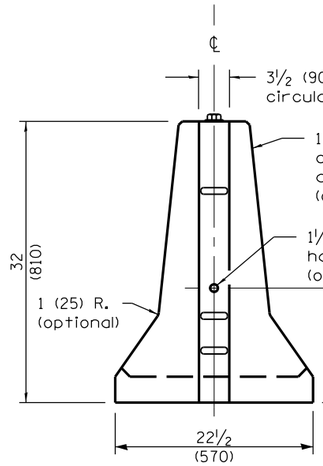

END VIEW
(Showing lifting slot)

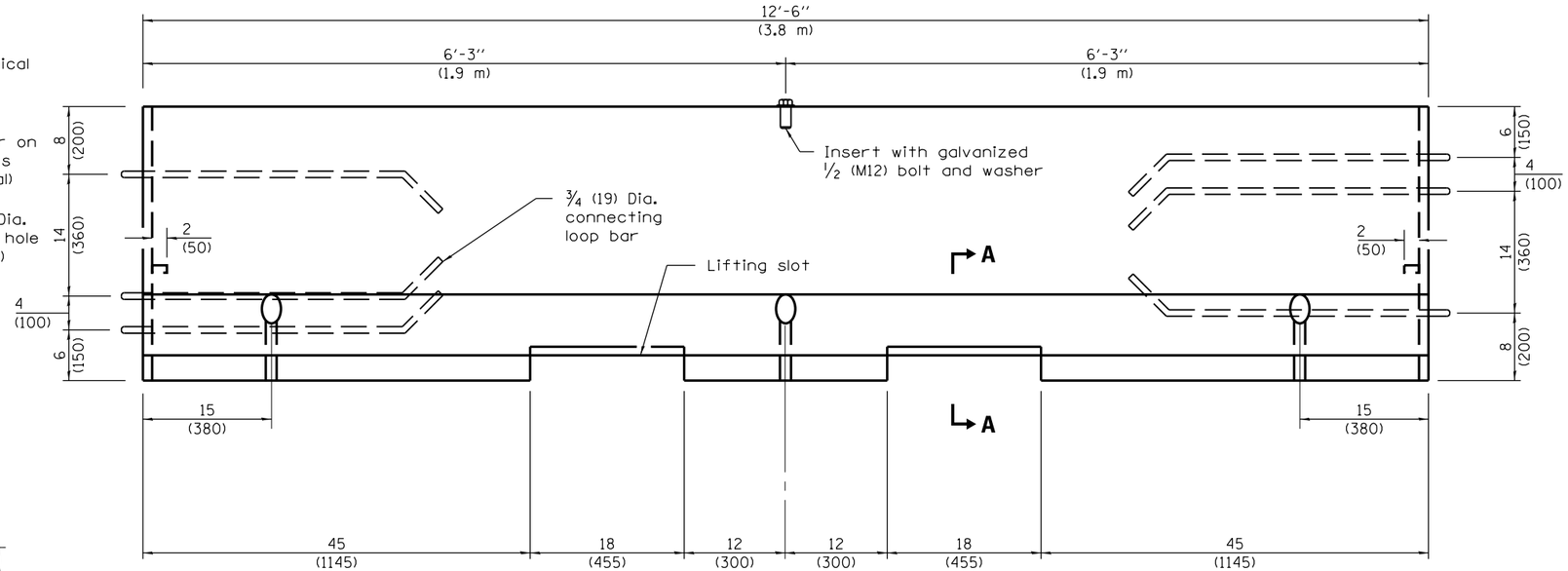

ELEVATION
(Showing connecting loop bars and vertical panel bolt/insert)

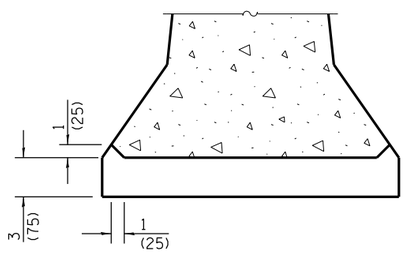

SECTION A–A
LIFTING SLOT

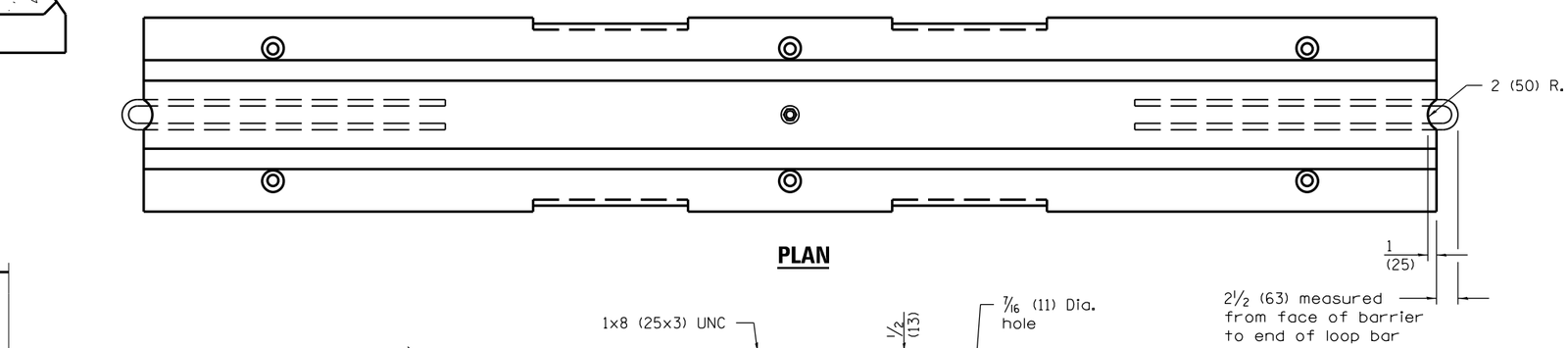

PLAN

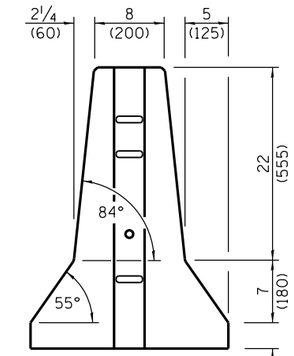

END VIEW

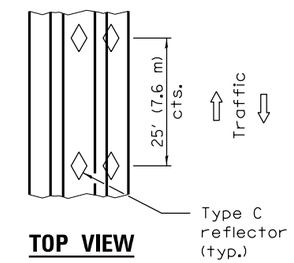

TOP VIEW

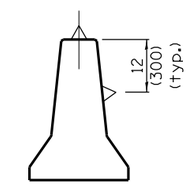

BARRIER WALL REFLECTORS

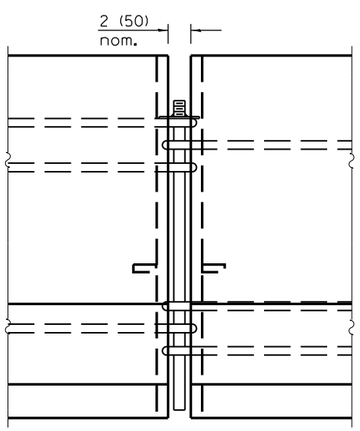

CONNECTING DETAIL

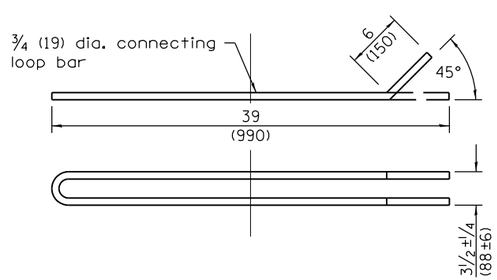

CONNECTING LOOP BAR

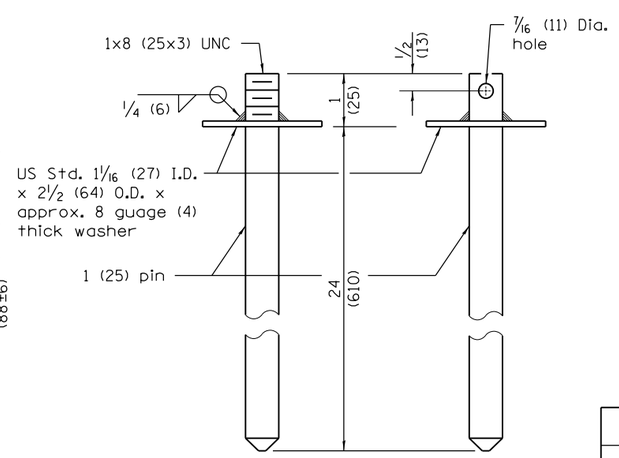

CONNECTING AND ANCHOR PINS
(End may be beveled ¼ (6) max.)

GENERAL NOTES

Each F shape barrier shall be clearly marked with "ILLINOIS F SHAPE", the Producer's mark and the date of manufacture. The markings shall be indented on the barrier or painted thereon with waterproof paint/ink.

The insert for the ½ (M12) bolt shall be capable of 3,000 lb (13 kN) pull-out strength.

When barrier separates opposing flows of traffic markers shall be on both sides of barrier.

See Standard 782006 for dimensions of Type C reflector.

All dimensions are in inches (millimeters) unless otherwise shown.

Illinois Department of Transportation

PASSED April 1, 2016
ENGINEER OF POLICY AND PROCEDURES
APPROVED April 1, 2016
ENGINEER OF DESIGN AND ENVIRONMENT

ISSUED 10-1-02

DATE	REVISIONS
4-1-16	Rev. opt. chamfer on all
	edges to 1 (25). Reference
	to Std. 635011 now 782006.
1-1-12	Omitted 'ALTERNATE' from
	connecting and anchoring
	pins detail.

TEMPORARY CONCRETE BARRIER

(Sheet 1 of 2)

STANDARD 704001–08

F SHAPE DESIGN

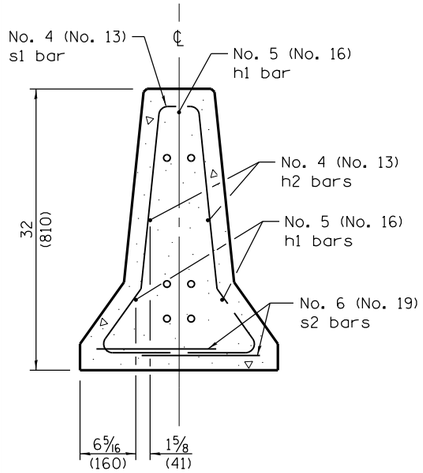

SECTION C–C

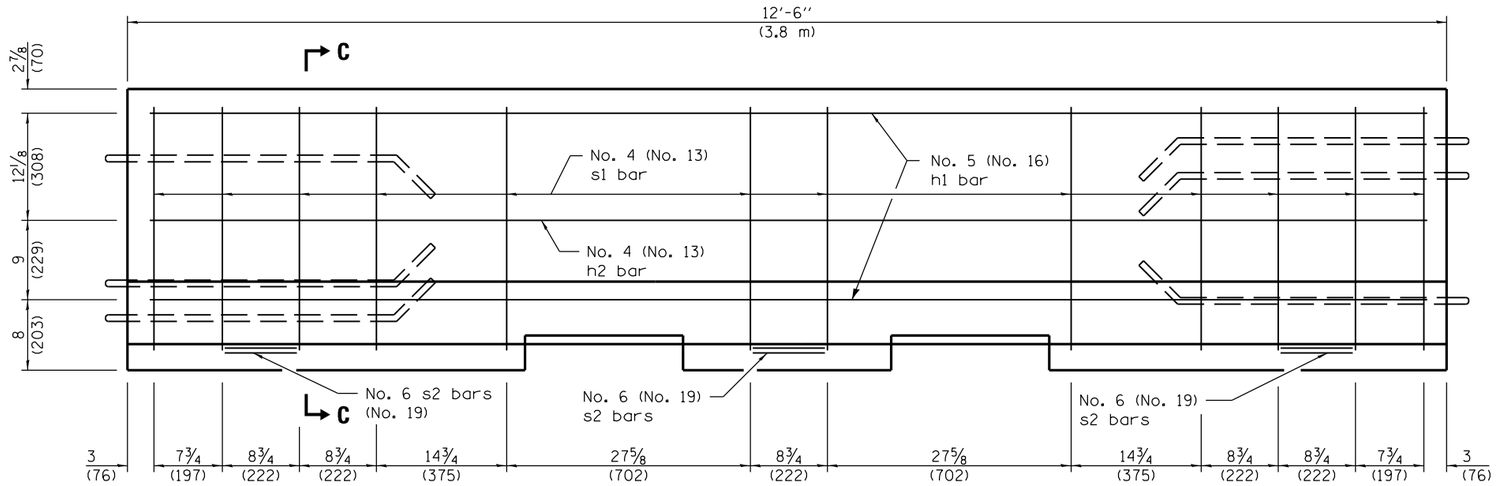

ELEVATION
(Reinforcement)

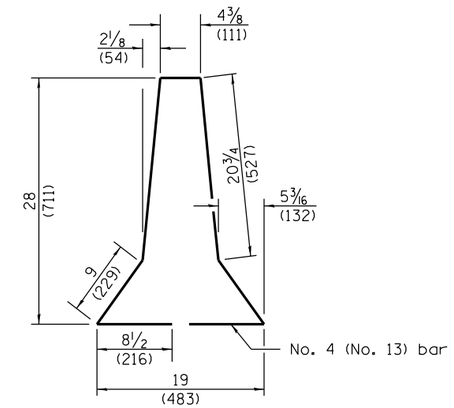

s1 BAR

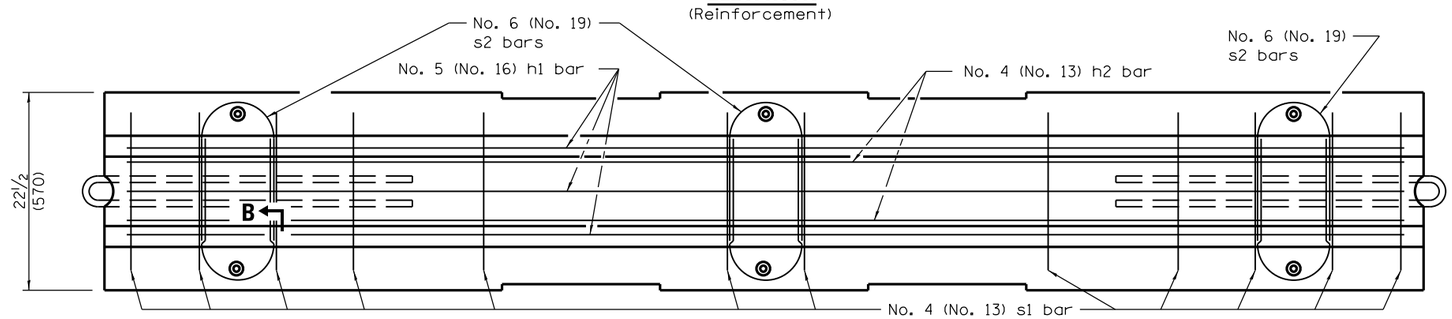

PLAN

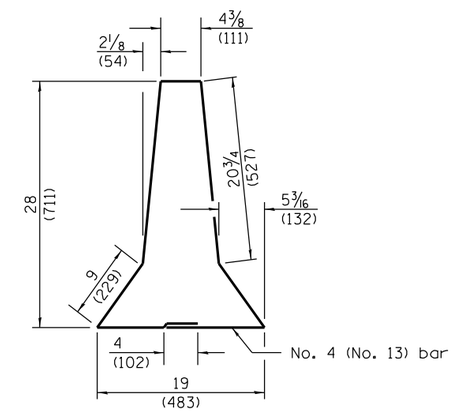

ALTERNATE s1 BAR

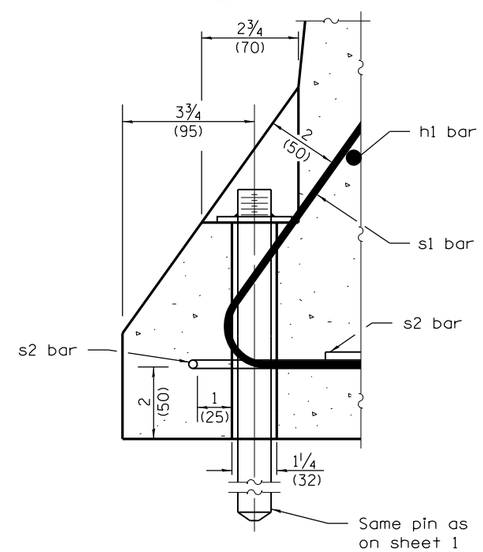

SECTION B–B
ANCHORING DETAIL

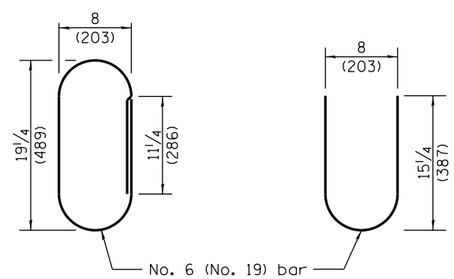

ALTERNATE s2 BARS

Illinois Department of Transportation

PASSED April 1, 2016
ENGINEER OF POLICY AND PROCEDURES
APPROVED April 1, 2016
ENGINEER OF DESIGN AND ENVIRONMENT

ISSUED 10-1-02

TEMPORARY CONCRETE BARRIER

(Sheet 2 of 2)

STANDARD 704001–08