Bench Mark: Brass disk set in concrete along the north side of Anthony Drive. Sta. ±1223+71, 150' Lt. Elev. = 734.35

Existing Structure: S.N. 010-0020 was originally built in 1957 as F.A. Route 39 Sec. 14-HB-F-2 at Sta. 200+06.10. Structure was widened along with a deck replacement in 1991. Existing structure is a 3 span, composite concrete deck with steel beams, supported on reinforced concrete stub abutments on concrete piles and reinforced concrete hammer head piers on a combination of concrete piles and timber piles. The bridge is 146'-6" back to back of abutments, with a 121'-2" to 123'-11¼" out to out of parapet. Superstructure is to be removed and replaced. Crossovers shall be utilized to maintain two lanes of traffic in each direction during construction.

No Salvage

Notes:

1. Bridge deck shall receive High Friction Surface Treatment (HFST) after Diamond Grinding. Longitudinal Grooving is not required with HFST.
2. All structural steel shall be metalized or galvanized.
3. Up to ¼ inch may be ground off the bridge deck and the bridge approach slabs.

SCOPE OF WORK

1. Remove existing deck, approach slab, steel beams, bearings, and abutment back walls.
2. Adjust the bearing seats to account for the shallower beams.
3. Retrofit the abutment back walls and wingwalls to semi-integral type.
4. Provide new W27 steel beams, bearings, concrete deck, and bridge approaches.
5. Repair deteriorated concrete on abutments and piers per Bridge Condition Report.

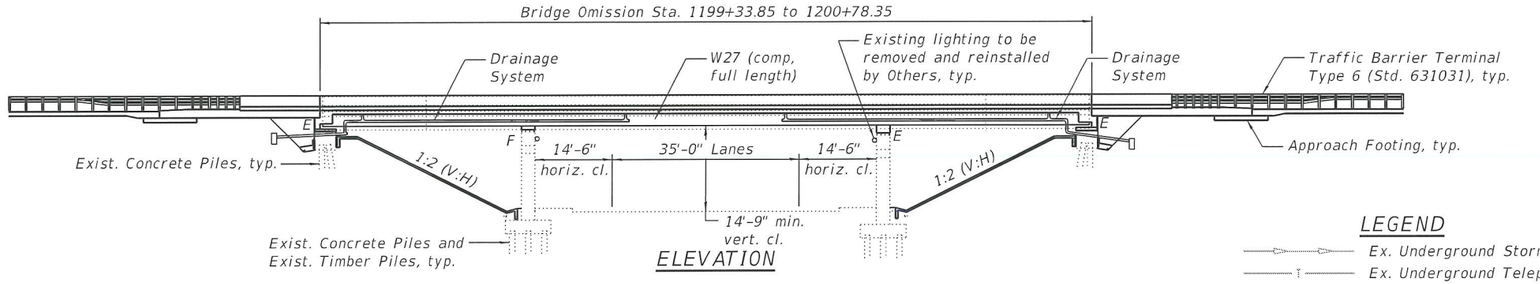

ELEVATION

LEGEND

- Ex. Underground Storm Sewer
- Ex. Underground Telephone Line
- Ex. Underground Water Main
- Ex. Underground Gas Line
- Ex. Aerial Line
- Ex. Underground Fiber Optic
- Ex. Underground Electric Line
- Prop. Catch Basin

HIGHWAY CLASSIFICATION

FAU Route 7169 - Market Street	FAI Route 74 - I-74
Functional Class: Minor Arterial	Functional Class: Interstate
ADT: 9,300 (2017); 10,200 (2037)	ADT: 63,100 (2017); 75,700 (2037)
ADTT: 800 (2017); 877 (2037)	ADTT: 8,455 (2017); 10,145 (2037)
DHV: 965	DHV: 6,155
Design Speed: 35 m.p.h.	Design Speed: 70 m.p.h.
Posted Speed: 35 m.p.h.	Posted Speed: 60 m.p.h.
Two-Way Traffic	Two-Way Traffic
Directional Distribution: 50:50	Directional Distribution: 50:50

DESIGN SPECIFICATIONS (New Const.)

2017 AASHTO LRFD Bridge Design Specifications, 8th Edition

LOADING HL-93 (New Const.)

Allow 50#/sq. ft. for future wearing surface.

DESIGN STRESSES

FIELD UNITS (New Const.)

f'c = 3,500 psi
f'c = 4,000 psi (Superstructure Concrete)
fy = 60,000 psi (Reinforcement)
fy = 50,000 psi (M270 Grade 50)

FIELD UNITS (Exist. Struct. 1956)

f'c = 2,000 psi
fy = 40,000 psi (Reinforcement)

FIELD UNITS (Exist. Struct. 1992)

f'c = 3,500 psi
fy = 60,00 psi (Reinforcement)

APPROVED
AUG 02 2019
AS A BASIS FOR PREPARATION OF DETAILED PLANS

SEISMIC DATA (Exist. Const.)

Seismic Performance Category (SPC) = A
Horizontal Bedrock Acceleration Coefficient (A) = 0.047g
Site Coefficient (S) = 1.2

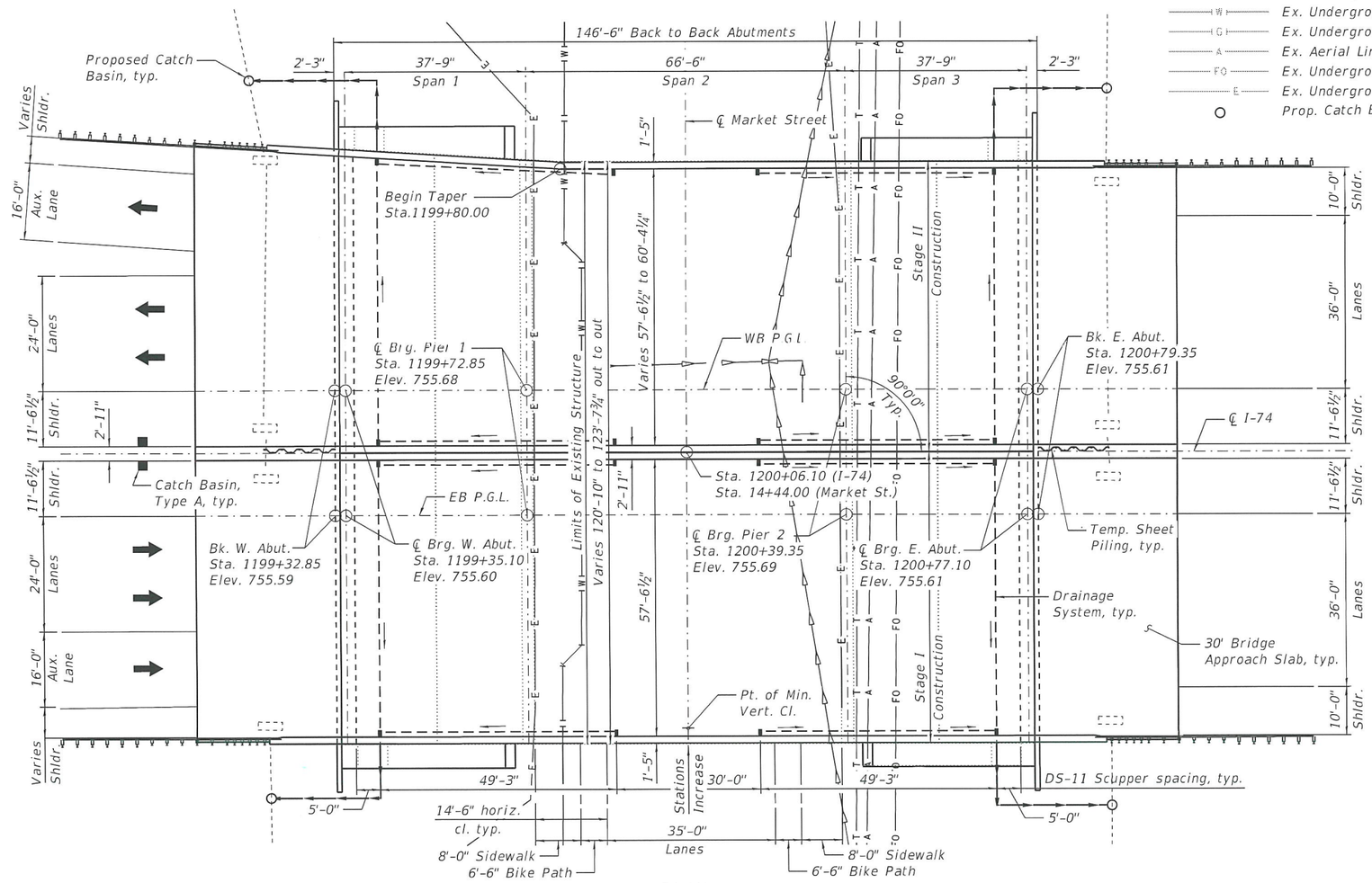

PLAN

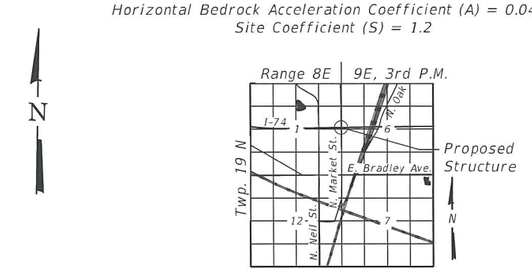

LOCATION SKETCH

GENERAL PLAN & ELEVATION
I-74 OVER MARKET STREET
F.A.I. RTE. 74 - SEC.(14-1)BR,(14HB-2)BR-1
CHAMPAIGN COUNTY
STATION 1200+06.10
STRUCTURE NO. 010-0020

exp U.S. Services Inc.
Chicago, IL
BUILDINGS·EARTH & ENVIRONMENT·ENERGY
INDUSTRIAL·INFRASTRUCTURE·SUSTAINABILITY

USER NAME =	DESIGNED - MTH	REVISED -	
	CHECKED - VPT	REVISED -	
PLOT SCALE =	DRAWN - CGY	REVISED -	
PLOT DATE =	CHECKED - MTH	REVISED -	

STATE OF ILLINOIS
DEPARTMENT OF TRANSPORTATION

SHEET 1 OF 2 SHEETS

F.A.I. RTE.	SECTION	COUNTY	TOTAL SHEETS	SHEET NO.
74	(14-1)BR, (14HB-2)BR-1	CHAMPAIGN	2	1
		CONTRACT NO. 70C64		
		ILLINOIS FED. AID PROJECT		

MODEL: Default
FILE NAME: pw:\\exp-pw.bentley.com:exp-pw-01\Documents\Projects\CHI\00246550-A01800 CADD Design\802 Phase II\802.10 Structure\TS&L\Sheets\0100020-70C64-TSL-001.dgn

8/2/2019 8:12:04 AM

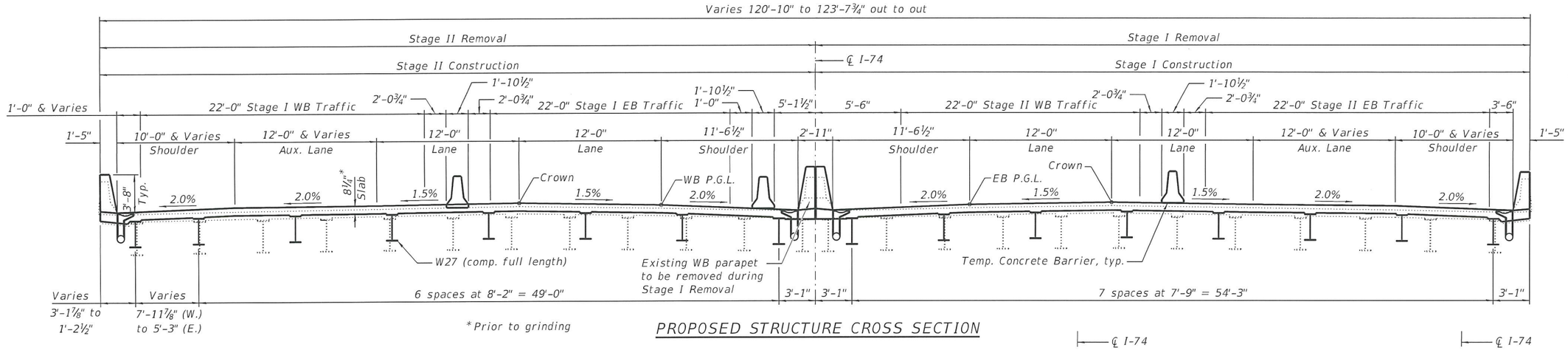

*Prior to grinding

PROPOSED STRUCTURE CROSS SECTION

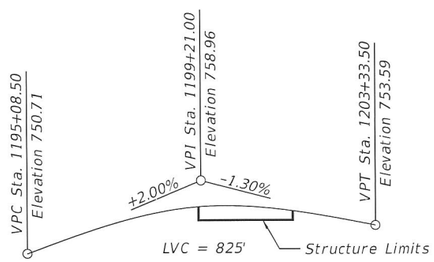

PROFILE GRADE I-74
(along median edge of pavement)
(The profile grade shows the final elevations after grinding)

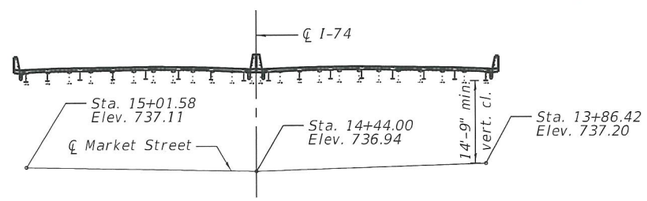

VERTICAL CLEARANCE DIAGRAM
(at ℄ Market Street looking east)

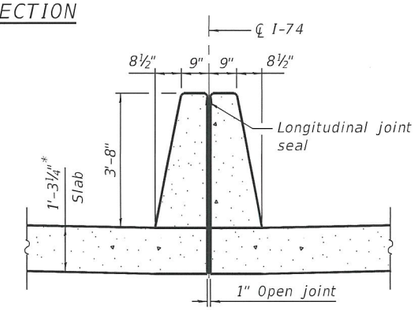

PARTIAL SECTION THROUGH APPROACH SLAB AT MEDIAN

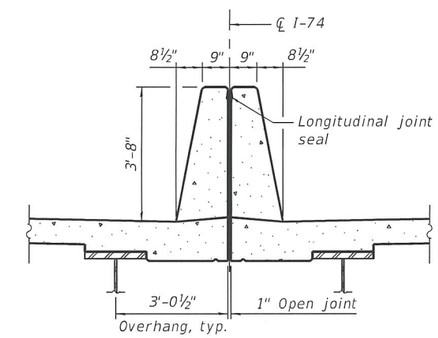

SECTION AT MEDIAN PARAPET

APPROVED
AUG 02 2019
AS A BASIS FOR PREPARATION OF DETAILED PLANS

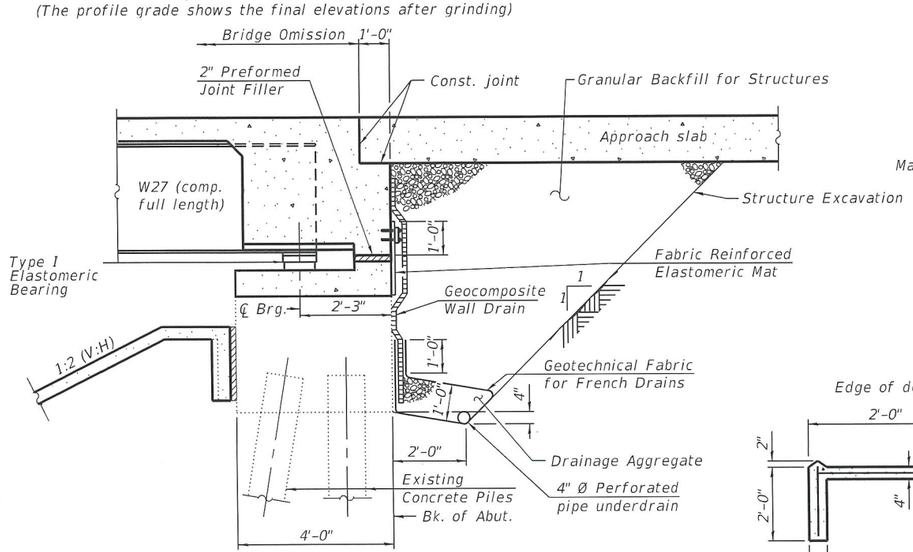

SECTION THRU SEMI-INTEGRAL ABUTMENT

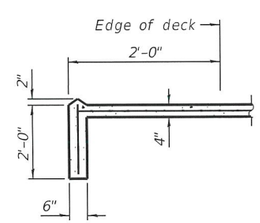

SECTION A-A

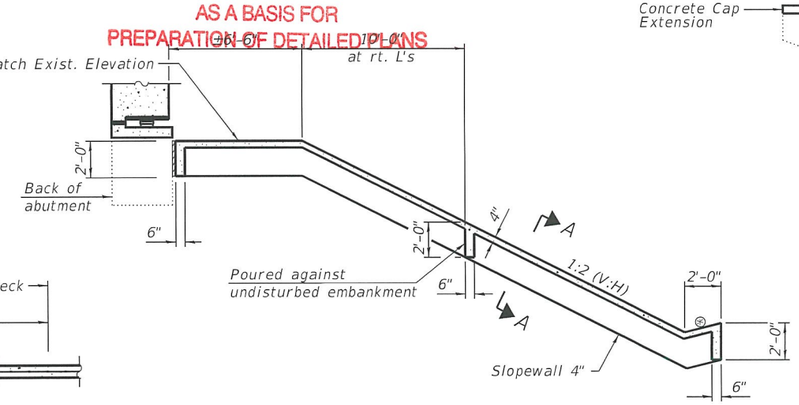

SECTION THRU CONCRETE SLOPEWALL

⊛1:4 (V:H)

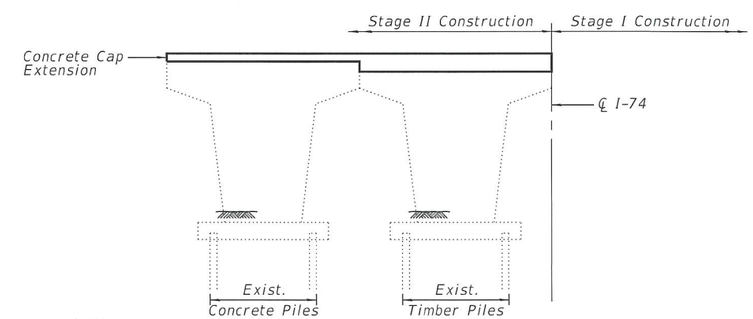

PIER SKETCH
(Looking East.
Symmetical about ℄ I-74)

DETAILS
I-74 OVER MARKET STREET
F.A.I. RTE. 74 - SEC.(14-1)BR,(14HB-2)BR-1
CHAMPAIGN COUNTY
STATION 1200+06.10
STRUCTURE NO. 010-0020

exp U.S. Services Inc. Chicago IL BUILDINGS•EARTH & ENVIRONMENT•ENERGY INDUSTRIAL•INFRASTRUCTURE•SUSTAINABILITY	USER NAME =	DESIGNED - MTH	REVISED -	STATE OF ILLINOIS DEPARTMENT OF TRANSPORTATION		F.A.I. RTE.	SECTION	COUNTY	TOTAL SHEETS	SHEET NO.
		CHECKED - VPT	REVISED -			74	(14-1)BR, (14HB-2)BR-1	CHAMPAIGN	2	2
	PLOT SCALE =	DRAWN - CGY	REVISED -					CONTRACT NO. 70C64		
	PLOT DATE =	CHECKED - MTH	REVISED -		SHEET 2 OF 2 SHEETS			ILLINOIS FED. AID PROJECT		

MODEL: Default
FILE NAME: pw:\\exp-pw.bentley.com:exp-pw-01\Documents\Projects\CHI\0024653\0-A0\800 CADD Design\802 Phase II\802.10 Structural\TS6L1\Sheets\0100020-70C64-TSL-002.dgn
8/2/2019 8:12:58 AM