Benchmark: IP with cap. Located at Station 485+26.42, 3.72 Left, Elevation 691.87.
Existing Structure: SN 010-8054 built in 1960 as FAI 74, a single cell 8'x3'x134'-4" cast-in-place box culvert on a 0° skew with 45° wingwalls.
Traffic to be maintained utilizing stage construction.
No salvage.

Note: See Sheet 2 for Construction Staging Detail.

APPROVED
SEP 25 2017
AS A BASIS FOR PREPARATION OF DETAILED PLANS

WATERWAY INFORMATION

Drainage Area = 3.14 sq. mi. Existing Low Grade Elev. = 686.19 @ Sta. 520+00
Proposed Low Grade Elev. = 686.19 @ Sta. 520+00

Flood	Freq. Yr.	Q C.F.S.	Opening Sq. Ft. Exist.	Opening Sq. Ft. Prop.	Nat. H.W.E.	Head - Ft. Exist.	Head - Ft. Prop.	Headwater El. Exist.	Headwater El. Prop.
	10	610	24	165	683.7	3.1	0.0	686.8	683.7
Design	50	1000	24	176	684.0	2.9	0.6	686.9	684.6
Base	100	1180	24	180	684.2	2.8	1.1	687.0	685.3
Overtopping	2	239	24	-	682.9	3.3	-	686.2	-
Max. Calc.	500	1620	-	180	684.5	-	1.9	-	686.4

10 Yr. Outlet Velocity from existing culvert = 10.3 fps
10 Yr. Outlet Velocity from proposed culvert = 4.03 fps

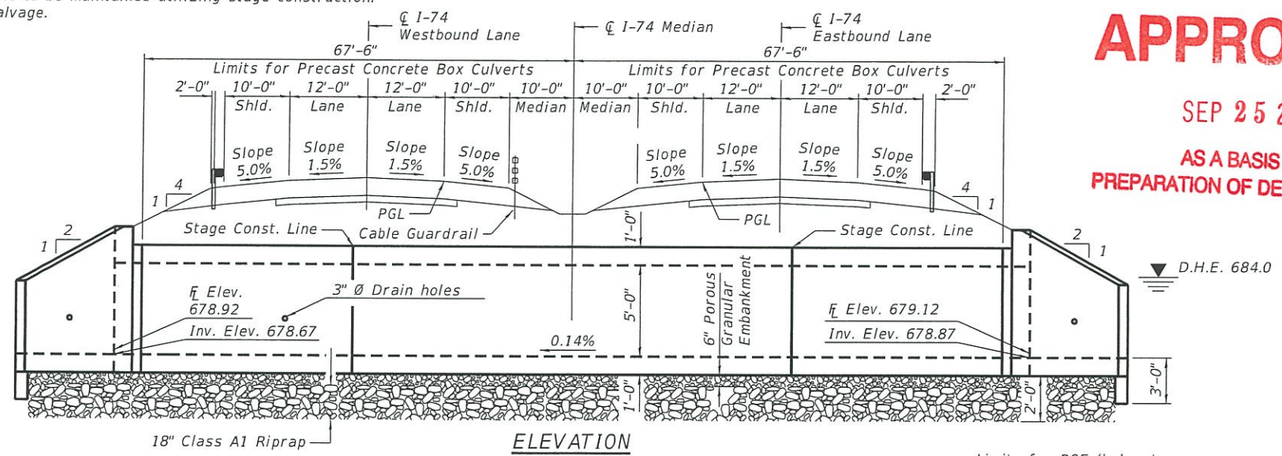

ELEVATION

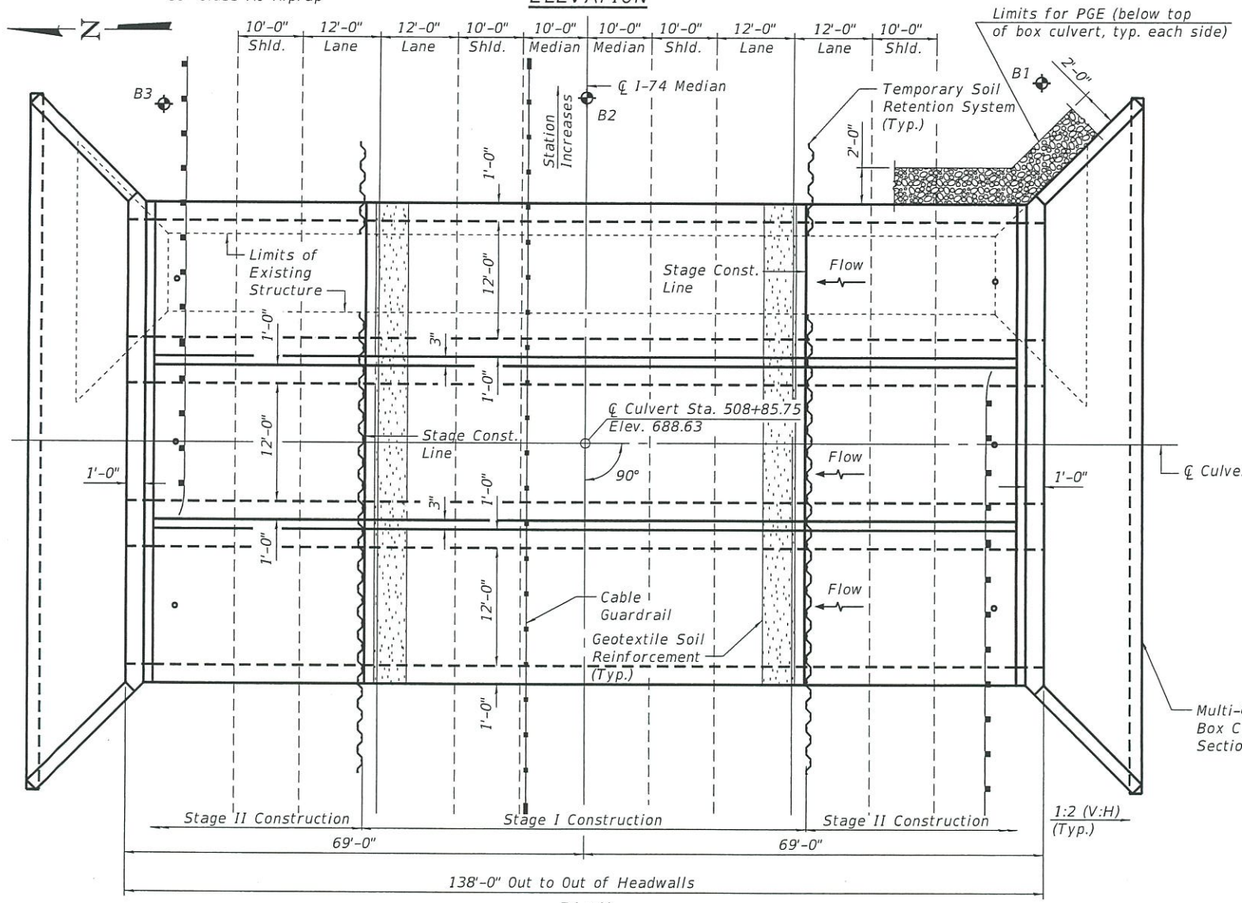

PLAN

NOT TO SCALE

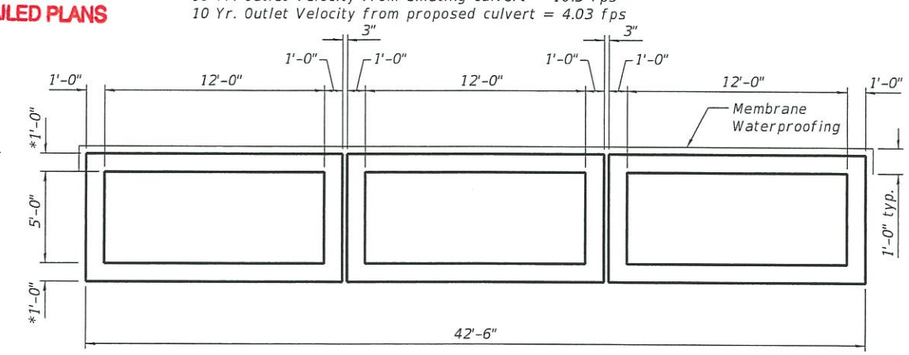

SECTION THROUGH BARREL
(Looking North)
* Subject to refinement during final design

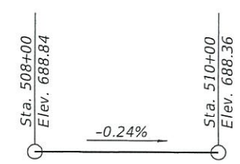

PROFILE GRADE

DESIGN SPECIFICATIONS

2014 AASHTO LRFD Bridge Design Specifications
7th Edition with 2015 and 2016 interims,
ASTM C1577

HIGHWAY CLASSIFICATION

FAI 74
Functional Class: Interstate
ADT: 30,000 (2017); 38,600 (2037)
DHV: 2,960
ADTT: 23.2%
Design Speed: 70 m.p.h.
Posted Speed: 70 m.p.h.
Directional Distribution: 55:45

LOADING HL-93

Allow for 50 psf for Future Wearing Surface
Design Earth Cover 2 feet.

DESIGN STRESSES

PRECAST UNITS

f'c = 5,000 psi
fy = 65,000 psi (Welded Wire Reinforcement)

FIELD UNITS

f'c = 3,500 psi
fy = 60,000 psi (Welded Wire Reinforcement)
fy = 60,000 psi (Reinforcement)

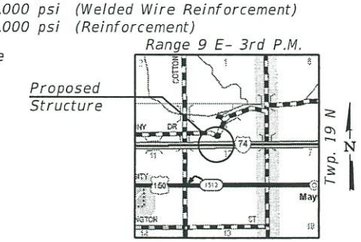

LOCATION SKETCH

GENERAL PLAN AND ELEVATION
F.A.I. RTE. I-74 OVER TRIBUTARY TO THE SALINE BRANCH DRAINAGE DISTRICT DITCH
F.A.I. RTE. 74 SEC. 10-6 RS-4 & 10-7 RS-3
CHAMPAIGN COUNTY
STATION 508+85.75
S.N. 010-2045

FILE NAME = P:\16-119.02 University Ave to St. Joseph\18_CAD\CADD Sheets\TSL01.dgn

Kaskaskia Engineering Group, LLC
1504 B. Main St., Suite 100
Belleville, Illinois 62220
618.233.8777 phone
618.233.8779 fax
www.kaskaskiaeng.com
PROFESSIONAL REGISTRATIONS: Illinois Professional Design Firm: Professional Engineering Group
LICENSE NO.: 184.003701; 25-5000194

USER NAME =	DESIGNED - MC	REVISED -	
	CHECKED - BB	REVISED -	
PLOT SCALE =	DRAWN - RJO	REVISED -	
PLOT DATE = 9/22/2017 3:01:19 PM	CHECKED - BB	REVISED -	

STATE OF ILLINOIS
DEPARTMENT OF TRANSPORTATION

GENERAL PLAN AND ELEVATION F.A.I. 74
OVER TRIBUTARY TO THE SALINE BRANCH DRAINAGE DISTRICT DITCH
SHEET NO. 1 OF 2 SHEETS

F.A.I. RTE.	SECTION	COUNTY	TOTAL SHEETS	SHEET NO.
74	10-6 RS-4 & 10-7 RS-3	CHAMPAIGN		
		CONTRACT NO. 70789		
		ILLINOIS FED. AID PROJECT		

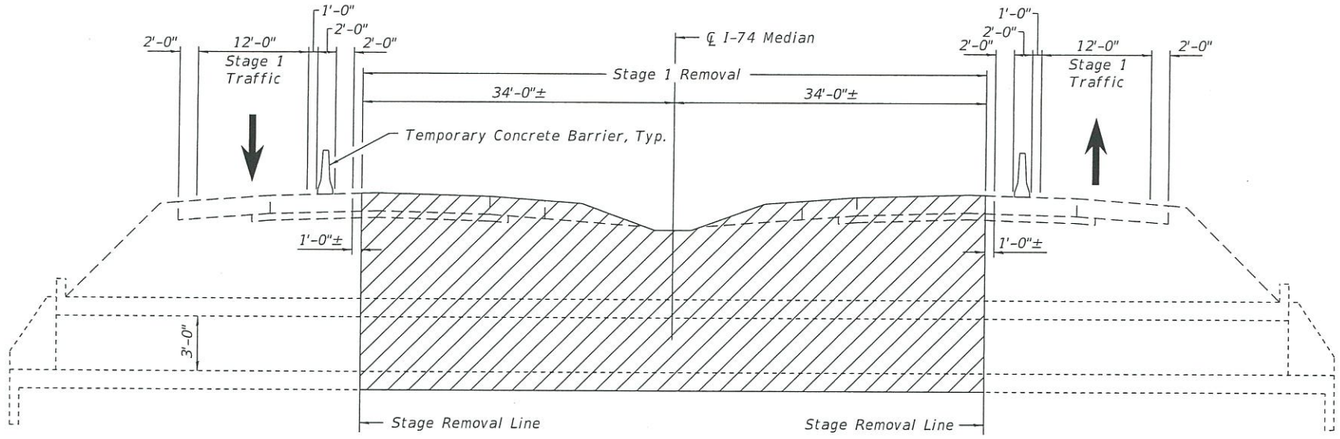

STAGE 1 REMOVAL

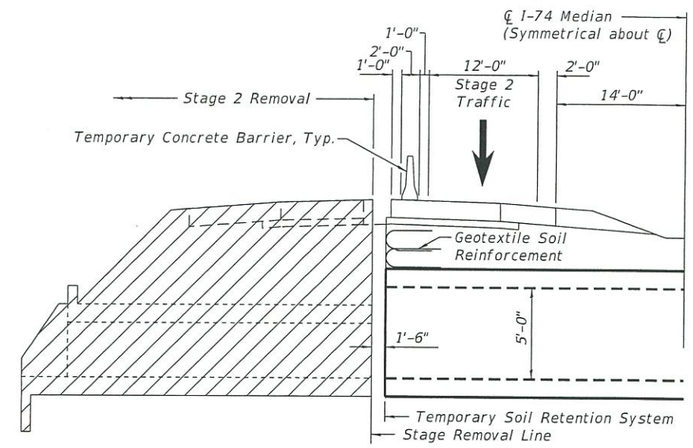

STAGE 2 REMOVAL

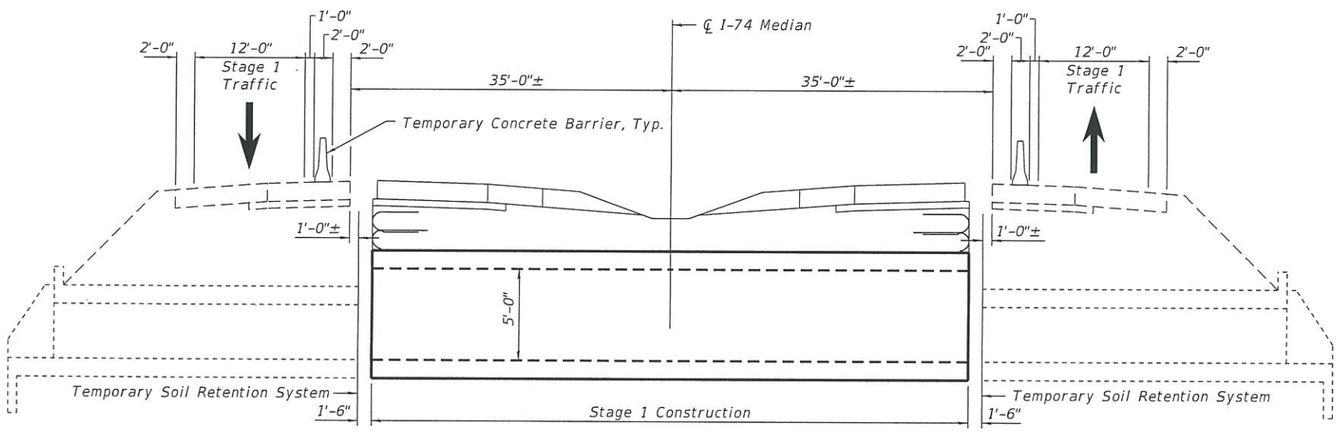

STAGE 1 CONSTRUCTION

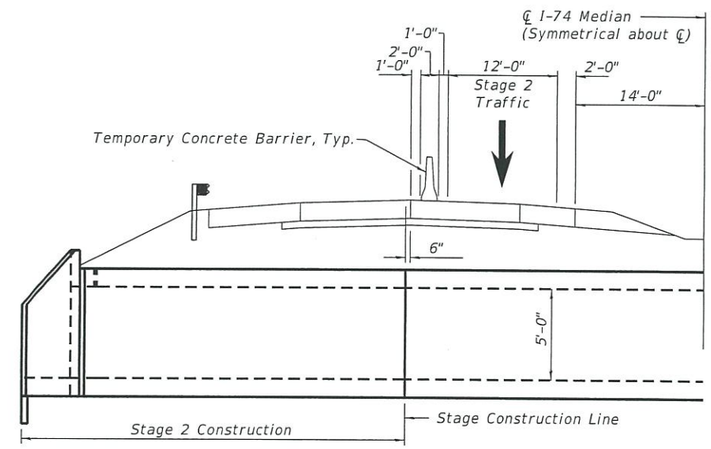

STAGE 2 CONSTRUCTION

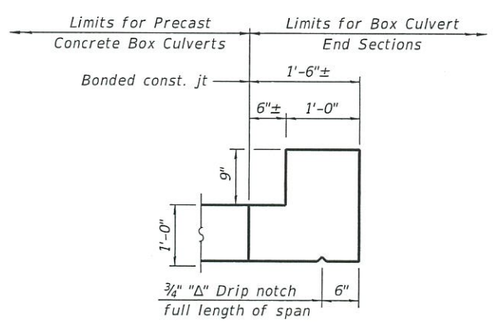

HEADWALL DETAIL

APPROVED

SEP 25 2017

AS A BASIS FOR
PREPARATION OF DETAILED PLANS

Notes:
1. All sections are looking Upstation.
2. One lane of traffic in each direction shall be maintained during each stage.

STAGE CONSTRUCTION DETAILS
F.A.I. RTE. I-74 OVER TRIBUTARY TO THE
SALINE BRANCH DRAINAGE DISTRICT DITCH
F.A.I. RTE. 74 SEC. 10-6 RS-4 & 10-7 RS-3
CHAMPAIGN COUNTY
STATION 508+85.75
S.N. 010-2045

NOT TO SCALE

FILE NAME = P:\16-1119.02 University Ave to St Joseph\10.CAD\C4DD Sheets\TSL02.dgn

Kaskaskia Engineering Group, LLC
PROFESSIONAL REGISTRATIONS: Illinois Professional Design Firm Professional Engineering Group
219 E. Main Pc., Suite 100 Belleville, Illinois 62220 618.233.5677 phone 618.233.5777 fax www.KaskaskiaEng.com
LICENSE NO. 184.004772 184.5650196

USER NAME =	DESIGNED - MC	REVISED -	
	CHECKED - BB	REVISED -	
PLOT SCALE =	DRAWN - RJO	REVISED -	
PLOT DATE = 9/19/2017 7:37:27 AM	CHECKED - BB	REVISED -	

STATE OF ILLINOIS
DEPARTMENT OF TRANSPORTATION

STAGING PLAN AND DETAILS F.A.I. RTE. 74
OVER TRIBUTARY TO THE SALINE BRANCH DRAINAGE DISTRICT DITCH

SHEET NO. 2 OF 2 SHEETS

F.A.I. RTE.	SECTION	COUNTY	TOTAL SHEETS	SHEET NO.
74	10-6 RS-4 & 10-7 RS-3	CHAMPAIGN		
		CONTRACT NO. 70789		
		ILLINOIS FED. AID PROJECT		