Bench Mark: Found square cut in north part of east bridge parapet of Mannheim rd. bridge over Addison Creek. Elev. 637.02.

Existing Structure: S.N. 016-1036 originally constructed in 1924 as a cast-in-place box culvert three cells 10' wide and 4' high and 35'-4" length. The culvert was extended at an unknown date to be 60' long. A second culvert extension in 1964 resulted in a 94'-6" long culvert. In 1969, the center cell of the culvert was removed and dredged to achieve a final middle cell depth of 7'-3" vertical clearance. The culvert was extended to the east in 1974 to become 103'-6" long. Two lanes of traffic shall be maintained for each direction utilizing Stage Construction.

* Slab thickness subject to refinement during the design phase.

** Interim streambed elevation matches existing condition. Future upstream elevation =626.28, future downstream elevation =626.13 per MWRD.

*** Existing sewer is plugged with concrete.

t Section modulus and tip elevation shall be determined in final design.

tt Size, spacing and tip elevations of piles shall be determined during final design.

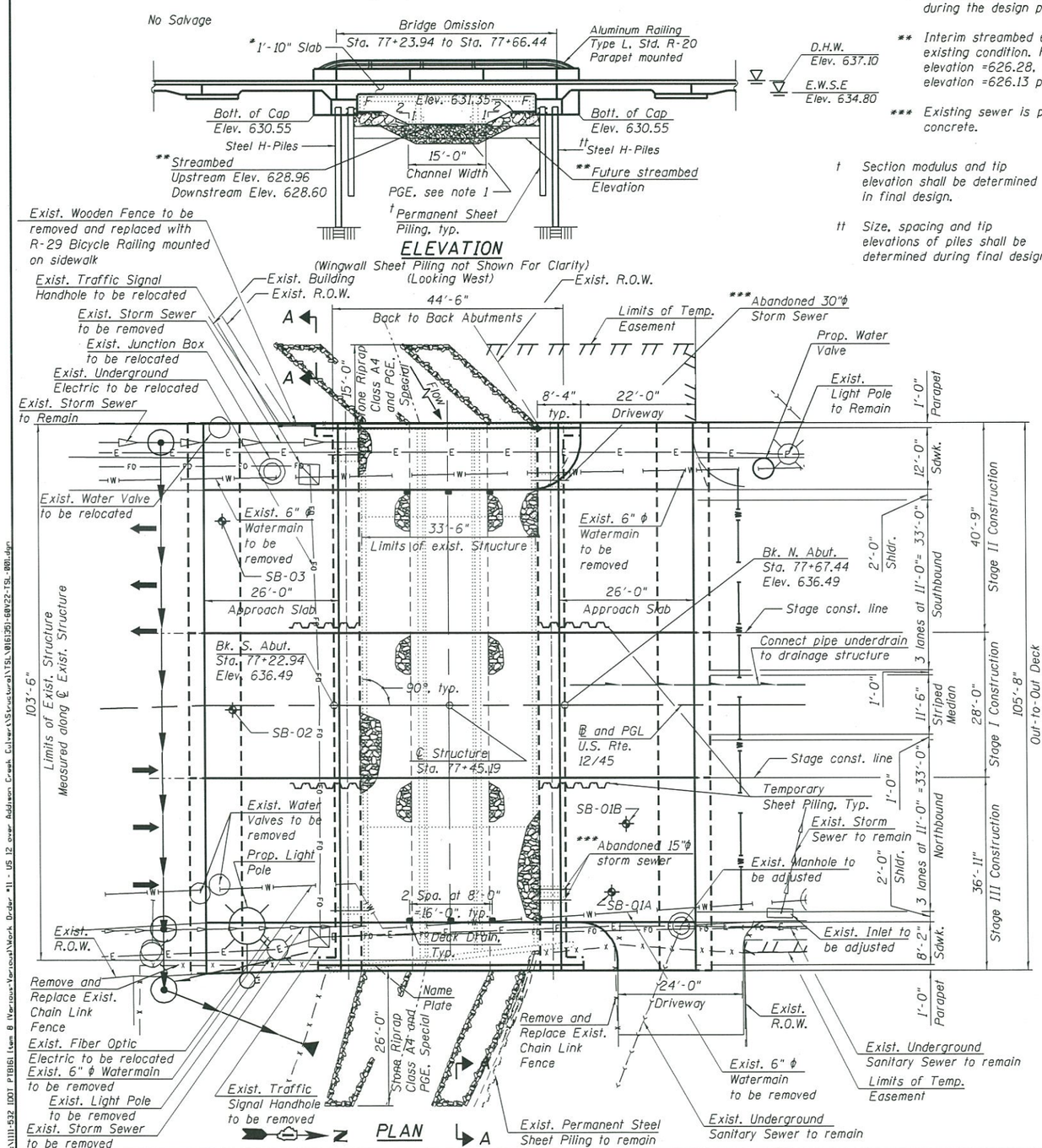

WATERWAY INFORMATION

Drainage Area = 8.31 sq. mi. Low Grade Elev. = 635.06 at Sta. 83+30 Max. Recorded H.W.E = 637.33

Flood	Freq. Yr.	Discharge-C.F.S Exist.	Discharge-C.F.S Prop.	Opening Sq. Ft. Exist.	Opening Sq. Ft. Prop.	Nat. H.W.E.	Head - Ft. Exist.	Head - Ft. Prop.	Headwater El. Exist.	Headwater El. Prop.
	10	494	494	117	143	635.9	1.1	0.3	637.0	636.2
Design	50	774	774	117	143	637.1	1.1	0.4	638.2	637.5
Base	100	863	863	117	143	637.4	1.1	0.4	638.5	637.8
Overtopping										
Max. Calc.	500	1060	1060	117	143	638.2	0.9	0.3	639.1	638.5

10-year velocity through the existing structure = 5.2 fps. 10-year velocity through the proposed structure = 3.6 fps.
2 Year Peak Flow (Q) = 284 C.F.S. Estimated Water Surface Elevation = 634.8

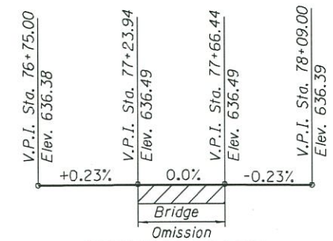

PROFILE GRADE

(Along ℄ US Rte. 12/45)

HIGHWAY CLASSIFICATION

F.A.P Rte. 330 - US. Rte. 12/45
Functional Class: Other Principal Arterial
ADT: 39,500 (2009); 40,000 (2030)
DHV: 3,200 (Two-Way Traffic)
Directional Distribution 50/50
ADTT: 8%
Design Speed: 35 mph
Posted Speed: 30 mph

LEGEND

- Soil Boring location
- Exist. Water Main
- Exist. Light Pole
- Exist. Underground Electric
- Exist. Water Valve
- Exist. Telephone Line
- Exist. Telephone Junction Box
- Exist. Traffic Signal Handhole
- Exist. Manhole
- Exist. Permanent Steel Sheet Piling
- Exist. Fiber Optic
- Exist. Storm Sewer
- Prop. Storm Sewer
- Prop. Water Main
- Prop. Water Valve
- Prop. Manhole
- Prop. End Section

CONSTRUCTION SEQUENCE FOR EACH STAGE CONSTRUCTION

1. Install temporary concrete barriers and temporary sheet piling.
2. Perform pavement removal and Structure Excavation for the approach slab and the abutments construction.
3. Install new permanent sheet piling and H-piles for the abutments.
4. Install shear studs, forms and reinforcement and construct concrete abutments.
5. Remove the existing portions of pavement and structure within limits of the current stage construction.
6. Perform Channel Excavation. Install Porous Granular Embankment, Special and Stone Riprap.
7. Construct deck slab and approach slabs.

APPROVED
JUL 12 2017
AS A BASIS FOR PREPARATION OF DETAILED PLANS

NOTE

1. For limits of Stone Riprap, Class A4 and Porous Granular Embankment, Special, see Sheet 3 of 3.

DESIGN SCOUR ELEVATION TABLE

Event / Limit State	Design Scour Elevations (ft.) S. Abut.	Design Scour Elevations (ft.) N. Abut.	Item 113
0100	617.40	617.90	5
0200	616.30	616.90	
Design	617.40	617.90	
Check	616.30	616.90	

SEISMIC DATA

Seismic Performance Zone (SPZ) = 1
Design Spectral Acceleration at 1.0 sec. (SD1) = 0.061g
Design Spectral Acceleration at 0.2 sec. (SDS) = 0.113g
Soil Site Class = C

DESIGN SPECIFICATIONS

2014 AASHTO LRFD Bridge Design Specifications, 7th Edition with 2015 and 2016 Interim Revisions.

LOADING HL-93

Allow 50 lb/sq. ft. for future wearing surface.

DESIGN STRESSES

FIELD UNITS

f'_c = 3,500 psi
f'_c = 4,000 psi (Superstructure Concrete)
f_y = 60,000 psi (Reinforcement)
f_y = 50,000 psi (AASHTO M270 Grade 50)

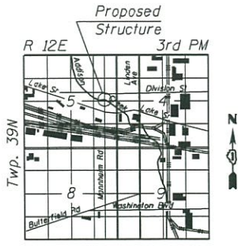

LOCATION SKETCH

GENERAL PLAN
U.S. RTE. 12/45
(MANNHEIM ROAD) OVER
ADDISON CREEK
F.A.P. RTE. 330 - SEC. 464-B
COOK COUNTY
STATION 77+45.19
STRUCTURE NO. 016-1351

FILE PATH = P:\111-532 IDOT PTB161 Item 8 (Various-Various)\Work Order #11 - US 12 over Addison Creek Culvert\Structural\TSL\016135I-60V22-TSL-001.dgn

HBM ENGINEERING GROUP, LLC. CONSULTING & DESIGN INSPECTION & RATING RESEARCH & TESTING
4415 WEST HARRISON ST. SUITE 231 HILLSIDE, IL 60162 PHONE: (708) 236-0900 FAX: (708) 236-0901

016135I-60V22-TSL-001.dgn	DESIGNED - MI, MA	REVISED	
USER NAME = lisa.buntin	DRAWN - MA, KJD	REVISED	
PLOT SCALE = 24.00 ' / in.	CHECKED - LAB, MI	REVISED	
PLOT DATE = 7/11/2017	DATE - 07/11/2017	REVISED	

STATE OF ILLINOIS
DEPARTMENT OF TRANSPORTATION

SCALE: SHEET 1 OF 3 SHEETS STA. TO STA.

F.A.P. RTE.	SECTION	COUNTY	TOTAL SHEETS	SHEET NO.
330	464-B	COOK	3	1

CONTRACT NO. 60V22
ILLINOIS FED. AID PROJECT

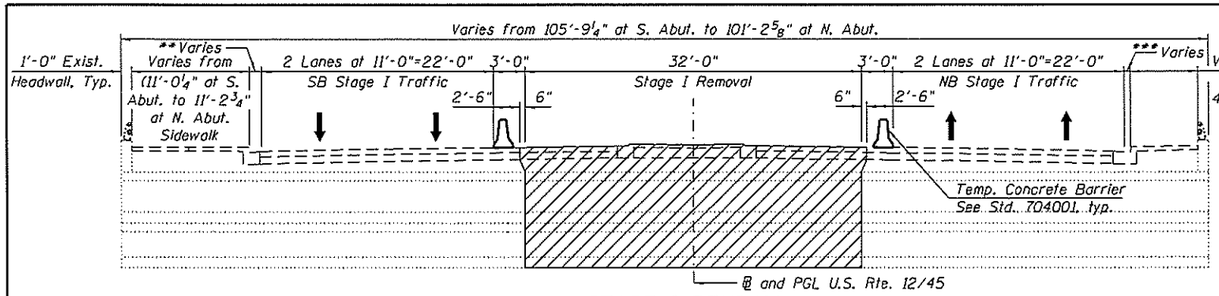

STAGE I REMOVAL

(Looking Upstation)
(Measured perp. to ℄ U.S. Rte 12/45)

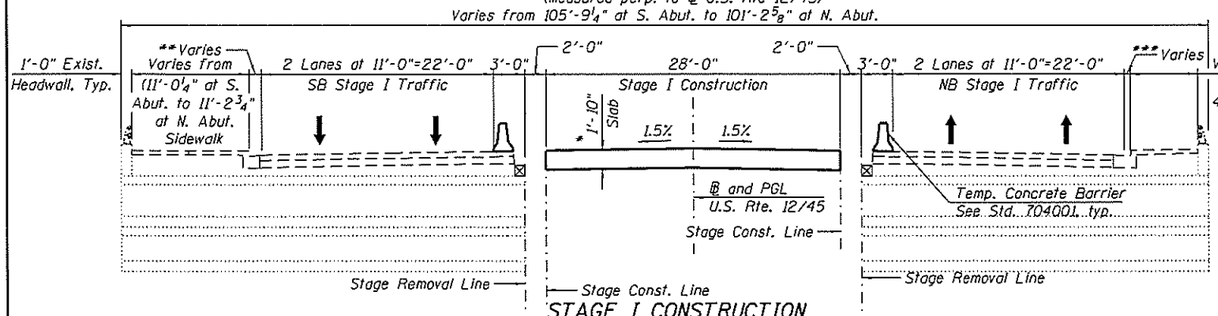

STAGE I CONSTRUCTION

(Looking Upstation)
(Measured perp. to ℄ U.S. Rte. 12/45)

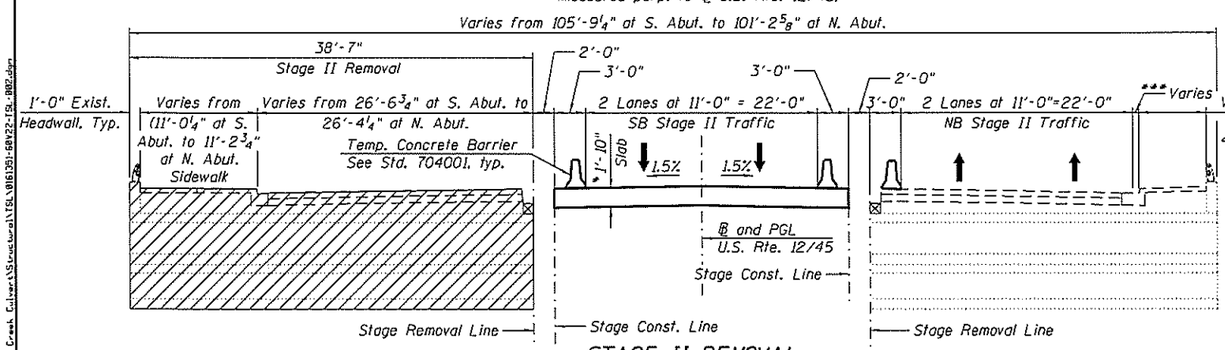

STAGE II REMOVAL

(Looking Upstation)
(Measured perp. to ℄ U.S. Rte. 12/45)

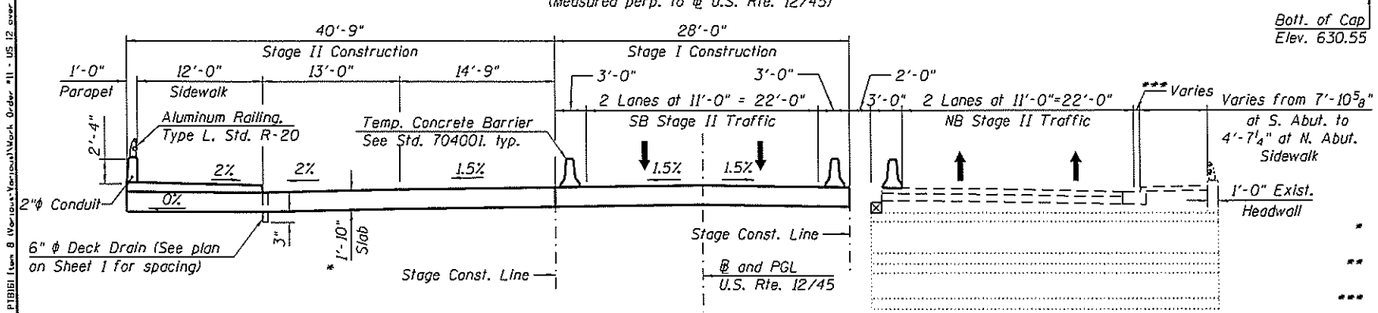

STAGE II CONSTRUCTION

(Looking Upstation)
(Measured perp. to ℄ U.S. Rte. 12/45)

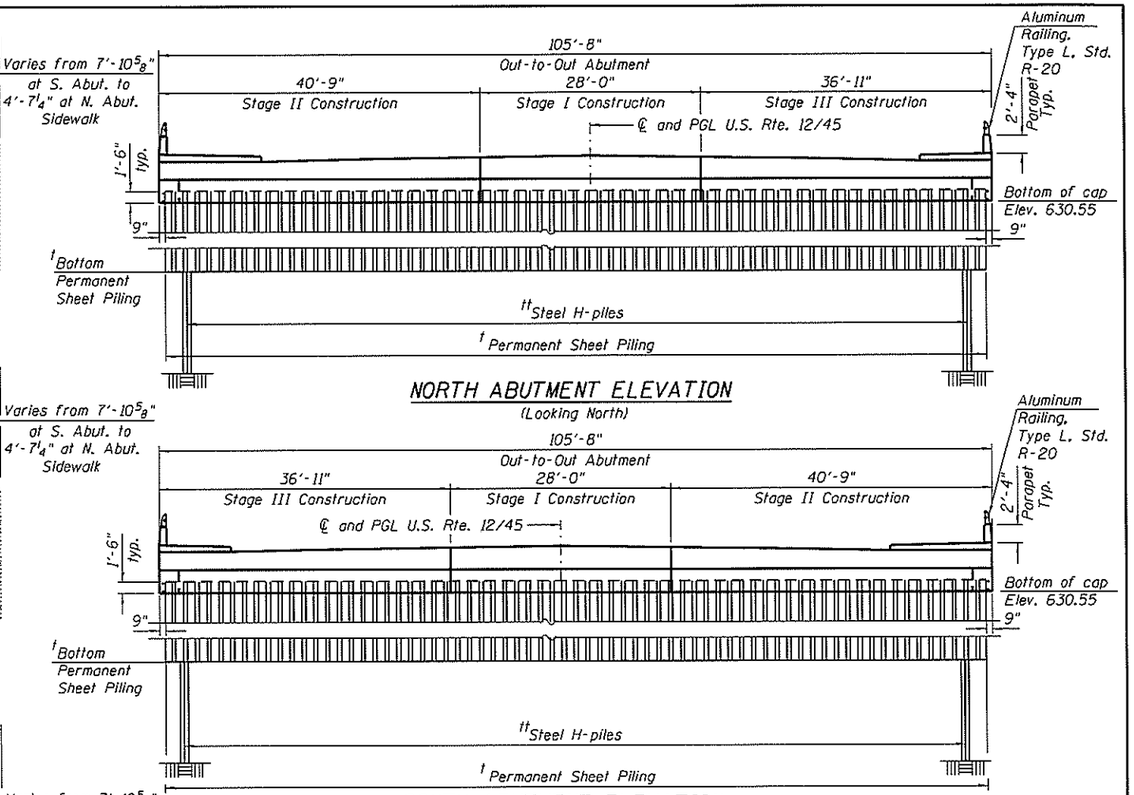

NORTH ABUTMENT ELEVATION

(Looking North)

SOUTH ABUTMENT ELEVATION

(Looking South)

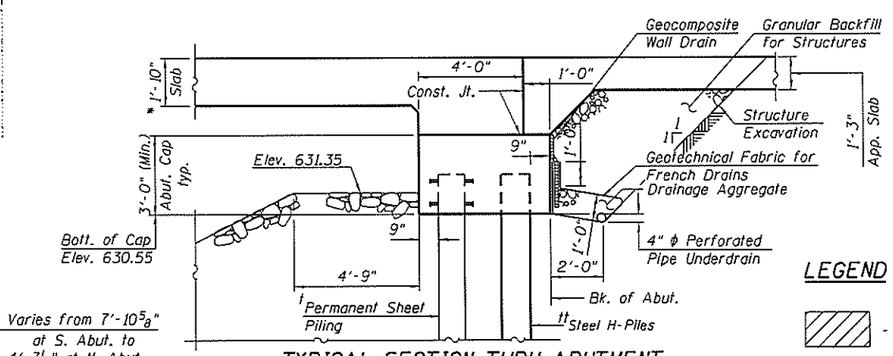

TYPICAL SECTION THRU ABUTMENT

(Wingwall Sheet Piling not Shown For Clarity)
(Horiz. dim. @ Rt. L's)

LEGEND

- Removal of existing structure

* Slab thickness subject to refinement during the design phase.

** Varies from 1'-6¾" at S. Abut. to 1'-4¼" at N. Abut.

*** Varies from 1'-3⅝" at S. Abut. to 0½" at N. Abut.

† Section modulus and tip elevation shall be determined in final design.

†† Size, spacing and tip elevations of piles shall be determined during final design.

DETAILS (SHEET 1 OF 2)
U.S. RTE. 12/45
(MANNHEIM ROAD) OVER
ADDISON CREEK
F.A.P. RTE. 330 - SEC. 464-B
COOK COUNTY
STATION 77+45.19
STRUCTURE NO. 016-1351

HBM ENGINEERING GROUP LLC. CONSULTING & DESIGN INSPECTION & RATING RESEARCH & TESTING
4415 WEST HARRISON ST. SUITE 231 HILLSIDE, IL 60162 PHONE: (708) 236-0900 FAX: (708) 236-0901

0161351-60V22-TSL-002.dgn	DESIGNED - MI, MA	REVISED	
USER NAME = lisa.burton	DRAWN - MA, KJD	REVISED	
PLOT SCALE = 1:40 ' / in.	CHECKED - LAB, MI	REVISED	
PLOT DATE = 7/11/2017	DATE - 07/11/2017	REVISED	

STATE OF ILLINOIS
DEPARTMENT OF TRANSPORTATION

SCALE: | SHEET 2 OF 3 SHEETS | STA. | TO STA.

F.A.P. RTE.	SECTION	COUNTY	TOTAL SHEETS	SHEET NO.
330	464-B	COOK	3	2
		CONTRACT NO. 60V22		
		ILLINOIS FED. AID PROJECT		

FILE PATH = P:\111-532 (001 P1861) Item 8 (Various-Various)\Work Order #11 - US 12 over Addison Creek Culvert\Structural\TSL\0161351-60V22-TSL-002.dgn

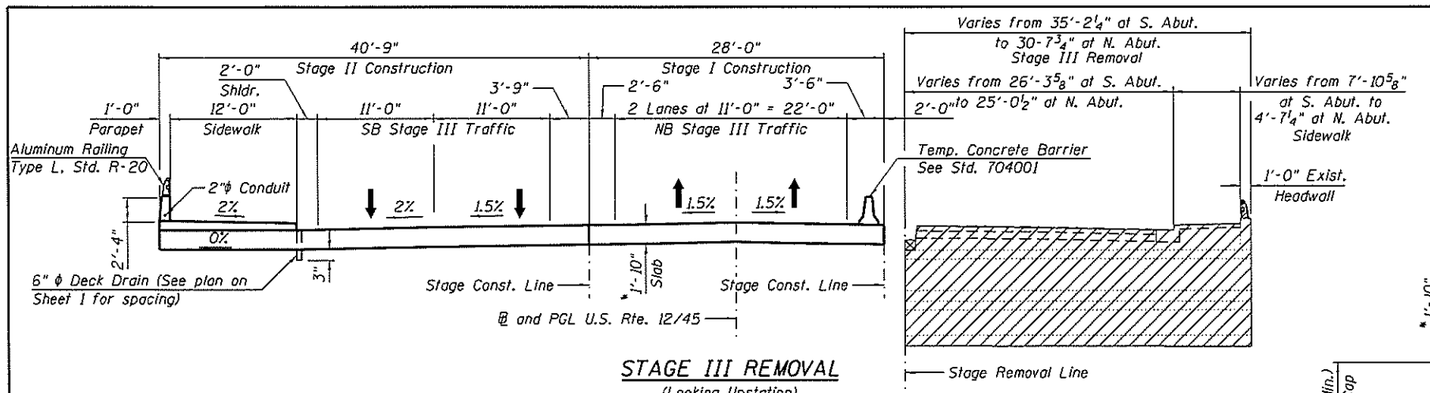

STAGE III REMOVAL

(Looking Upstation)
(Measured perp. to ℄ U.S. Rte 12/45)

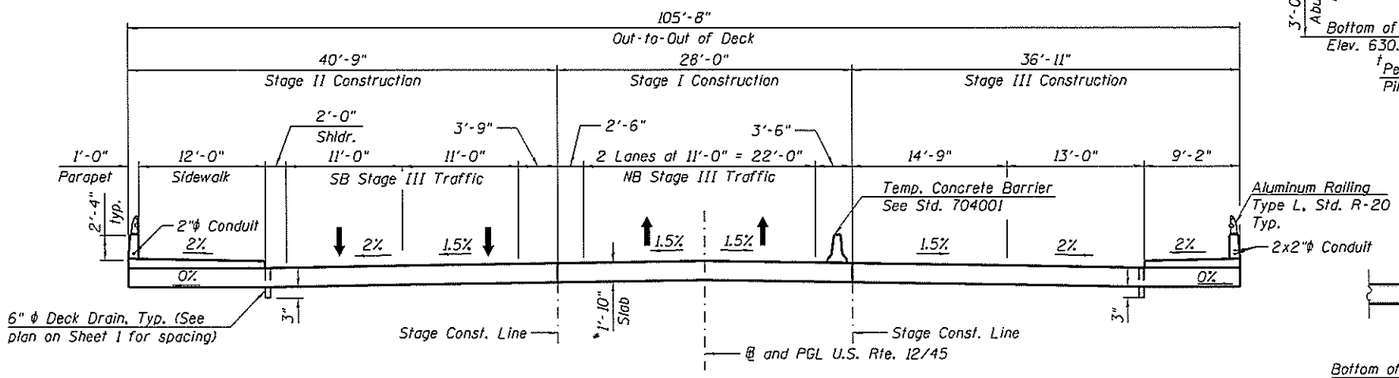

STAGE III CONSTRUCTION

(Looking Upstation)
(Measured perp. to ℄ U.S. Rte 12/45)

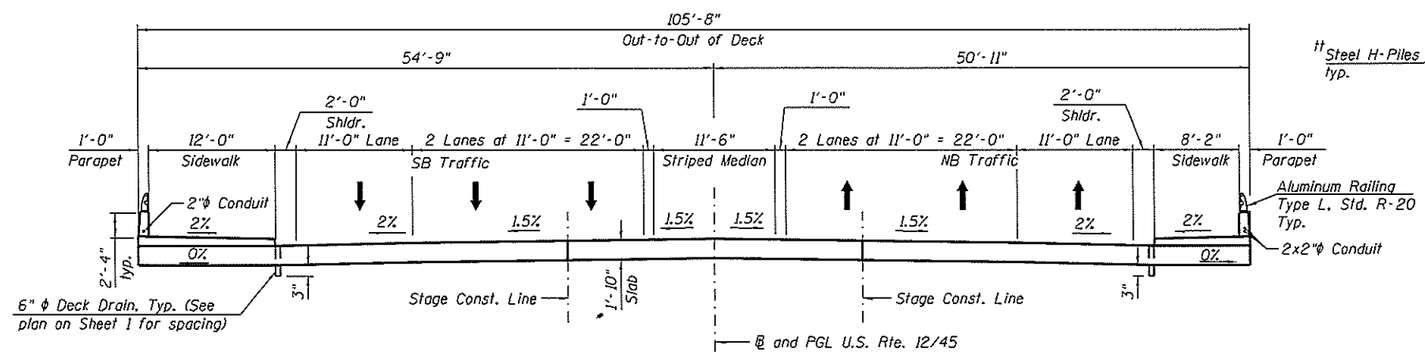

FINAL CROSS SECTION

(Looking Upstation)
(Measured perp. to ℄ U.S. Rte 12/45)

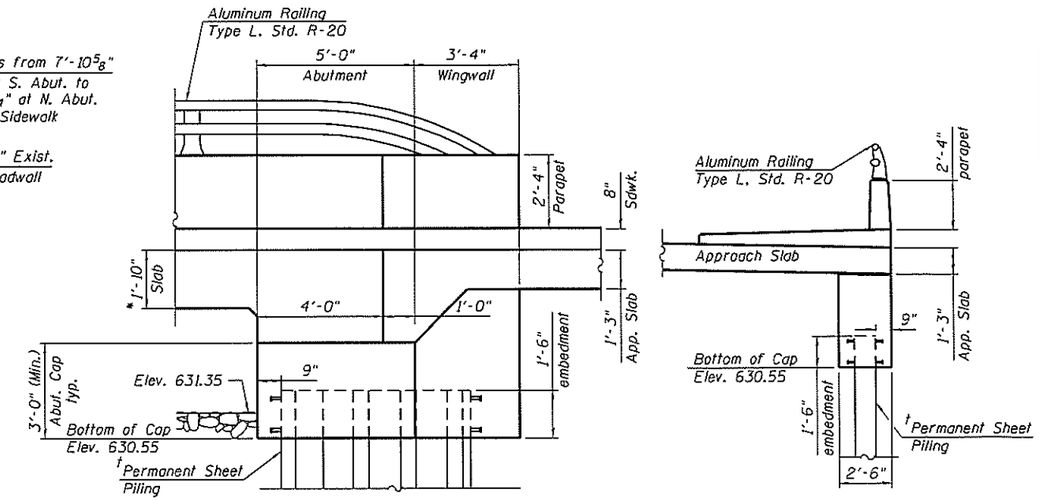

TYPICAL WINGWALL ELEVATION

(Steel H-Piles not shown for clarity)

TYPICAL SECTION THRU WINGWALL

(At Approach Slab)

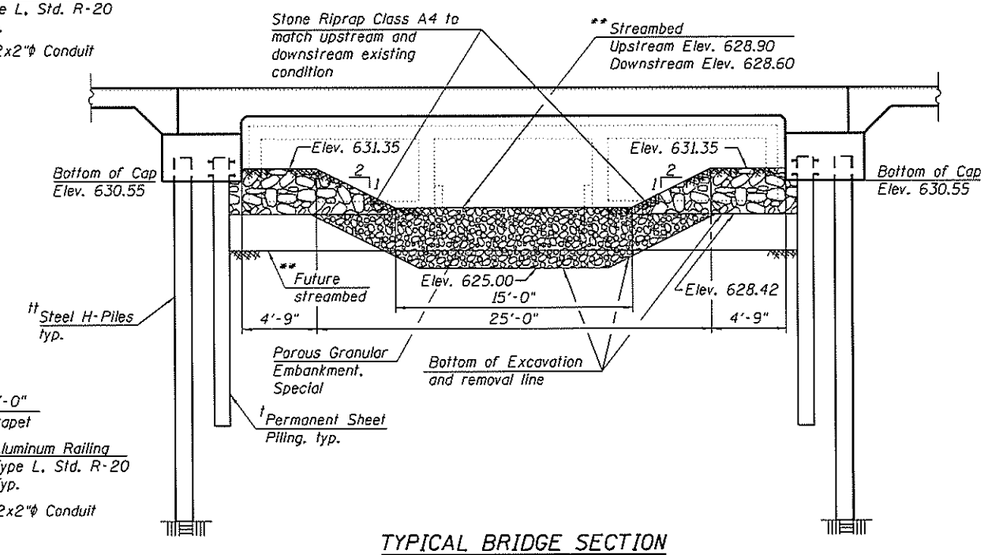

TYPICAL BRIDGE SECTION

* Slab thickness subject to refinement during the design phase.

** Interim streambed elevation matches existing condition. Future upstream elevation =626.28, future downstream elevation =626.13 per MWRD.

† Section modulus and tip elevation shall be determined in final design.

†† Size, spacing and tip elevations of piles shall be determined during final design.

LEGEND

▨ - Removal of existing structure

DETAILS (SHEET 2 OF 2)
U.S. RTE. 12/45
(MANNHEIM ROAD) OVER
ADDISON CREEK
F.A.P. RTE. 330 - SEC. 464-B
COOK COUNTY
STATION 77+45.19
STRUCTURE NO. 016-1351

FILE PATH = PA1111-532 IDOT P18161 Item 8 (Various)\Various\Work Order #11 - US 12 over Addison Creek Culvert\Structural\TSL\016351-60V22-TSL-003.dgn

HBM ENGINEERING GROUP LLC. CONSULTING & DESIGN INSPECTION & RATING RESEARCH & TESTING	4415 WEST HARRISON ST. SUITE 331 HILLSIDE, IL 60162 PHONE: (708) 236-0900 FAX: (708) 236-0901	016351-60V22-TSL-003.dgn	DESIGNED - MI, MA	REVISED
		USER NAME = lisa.buntin	DRAWN - MA, KJD	REVISED
		PLOT SCALE = 1410 '1' / in.	CHECKED - LAB, MI	REVISED
		PLOT DATE = 7/11/2017	DATE - 07/11/2017	REVISED

STATE OF ILLINOIS
DEPARTMENT OF TRANSPORTATION

SCALE: | SHEET 3 OF 3 SHEETS | STA. TO STA.

F.A.P. RTE.	SECTION	COUNTY	TOTAL SHEETS	SHEET NO.
330	464-B	COOK	3	3
		CONTRACT NO. 60V22		
		ILLINOIS FED. AID PROJECT		