Bench Mark: Set "X" on east barrier wall of I-90 at ℄ of Adams Street. Elev. 581.17.

Existing Structure: SN 016-0589. Constructed in 1955 under F.A.I. Route 173, Section 0101.2-3B. The outbound ramp from Adams to northbound I-90/94 was constructed in 1957. The bridge underwent repairs in 1999 under Section 0101-2-3B-R. Four span bridge measures 282'-4" from back to back of abutments. Out-to-out width of 73'-11". The spans are supported by 36" wide flange beams. Substructure is reinforced concrete closed abutments and multi-column piers founded on timber piles with concrete footing bracing. The Existing Adams Entrance Ramp is offset 90° from the centerline of Adams Street. Three span bridge that measures 169'-10" from back of north abutment to the centerline of the north fascia beam on Adams Street. Out-to-out width is 22'-6". The spans are supported by 24" wide flange beams. Substructure is reinforced concrete closed north abutment and single hammerhead piers founded on caissons. A concrete cantilever retaining wall extends north of the north abutment for 167'-7". The existing bridge is to be removed and replaced.

The bridge will be closed to traffic and detoured during construction.

No Salvage.

HIGHWAY CLASSIFICATION

F.A.U. Rte. 1421 (Adams Street)
Functional Class: Collector (Urban)
ADT: 8,900 (2012); 9,167 (2040)
ADTT: 890 (2012); 920 (2040)
DHV: 890 (One-Way)
Design Speed: 30 m.p.h.
Posted Speed: 30 m.p.h.
One-Way Traffic

Ramp SW
Functional Class: Interstate
ADT: 24,500 (2012); 23,000 (2040)
ADTT: 907 (2012); 851 (2040)
DHV: 1,720 (2040)
Design Speed: 35 m.p.h.
Posted Speed: 35 m.p.h.
One-Way Traffic

F.A.I. Rte. 90/94 SB
Functional Class: Interstate
ADT: 100,100 (2012); 98,000 (2040)
ADTT: 11,351 (2012); 11,113 (2040)
DHV: 6,340 (2040)
Design Speed: 60 m.p.h.
Posted Speed: 45 m.p.h.
One-Way Traffic

F.A.I. Rte. 90/94 NB
Functional Class: Interstate
ADT: 96,700 (2012); 81,000 (2040)
ADTT: 11,217 (2012); 9,396 (2040)
DHV: 4,780 (2040)
Design Speed: 60 m.p.h.
Posted Speed: 45 m.p.h.
One-Way Traffic

NB C-D Road
Functional Class: Interstate
ADT: NA (2012); 17,000 (2040)
ADTT: NA (2012); 440 (2040)
DHV: 1,680 (2040)
Design Speed: 30 m.p.h.
Posted Speed: 30 m.p.h.
One-Way Traffic

APPROVED
SEP 13 2017
AS A BASIS FOR
PREPARATION OF DETAILED PLANS

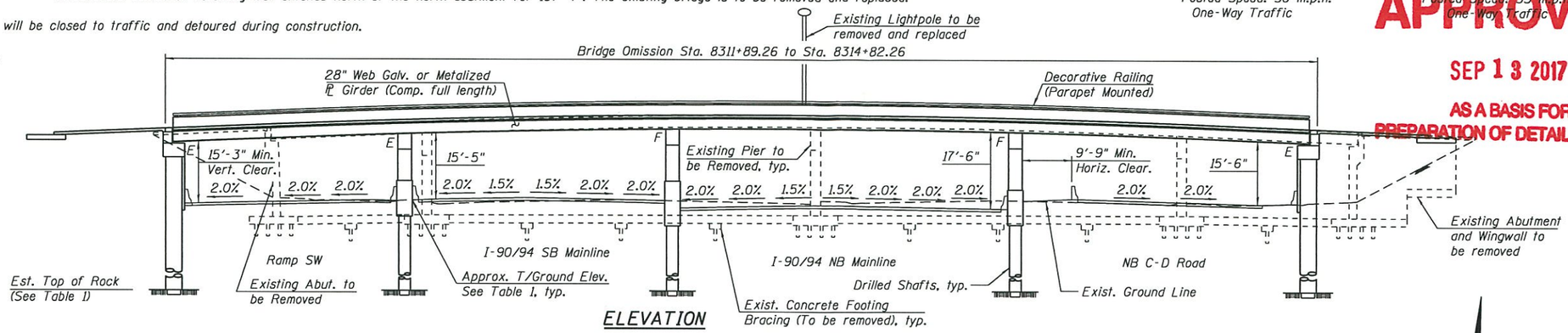

ELEVATION

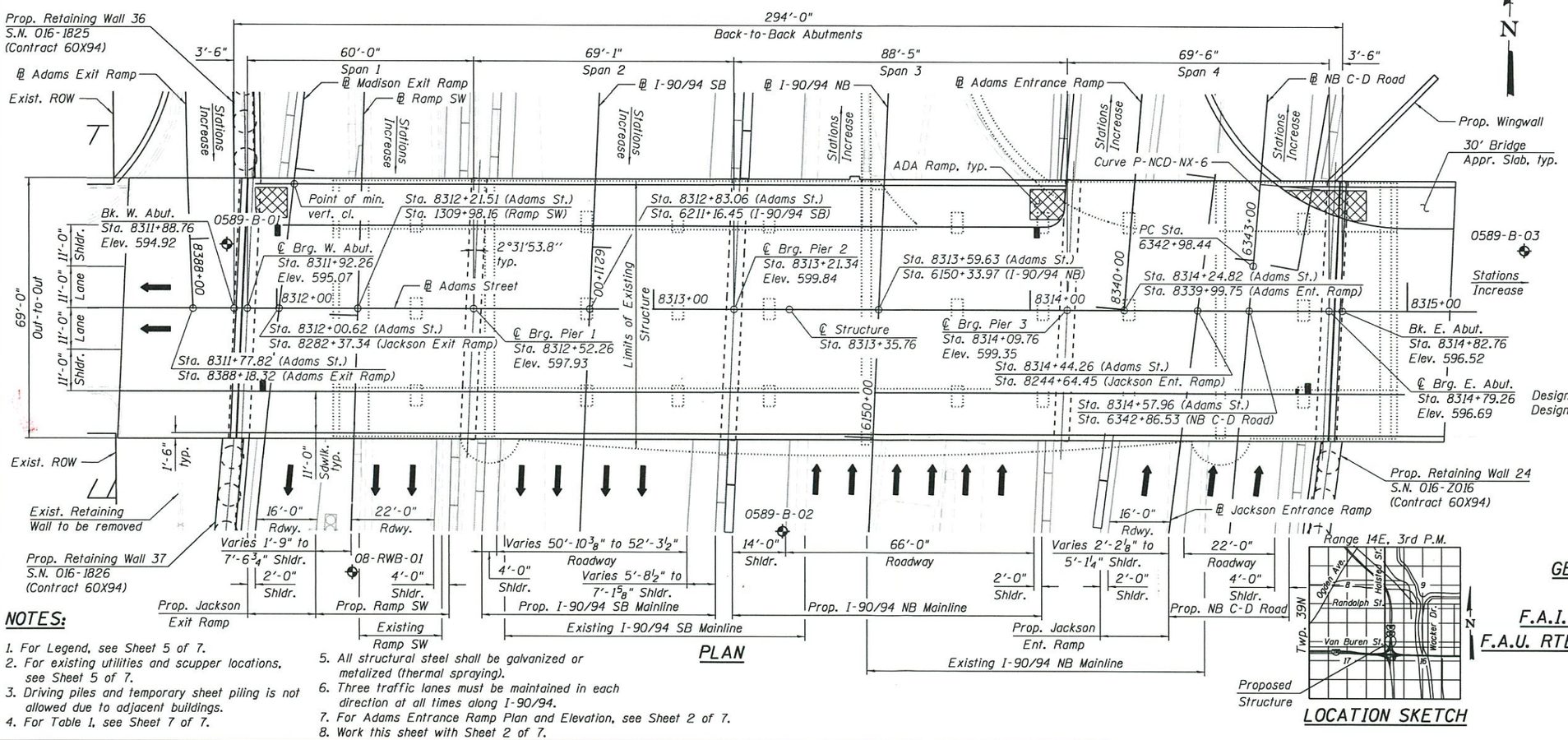

PLAN

LOCATION SKETCH

LOADING HL-93

Allow 50#/sq. ft. for future wearing surface.

DESIGN SPECIFICATIONS

2014 AASHTO LRFD Bridge Design Specifications 7th Edition with 2015 and 2016 Interim Specifications

DESIGN STRESSES

FIELD UNITS

f'c = 3,500 psi
f'c = 4,000 psi (Superstructure Concrete)
fy = 60,000 psi (Reinforcement)
fy = 50,000 psi (M270 Grade 50)

PRECAST UNITS

f'c = 4,500 psi

SEISMIC DATA

Seismic Performance Zone (SPZ) = 1
Design Spectral Acceleration at 1.0 sec. (S_{D1}) = 0.085g
Design Spectral Acceleration at 0.2 sec. (S_{DS}) = 0.144g
Soil Site Class = D

WEST & EAST ABUTMENT DEFLECTION CRITERIA:

Maximum total lateral abutment deflection at top of wall: 1.0 inch.

NOTES:

1. For Legend, see Sheet 5 of 7.
2. For existing utilities and scupper locations, see Sheet 5 of 7.
3. Driving piles and temporary sheet piling is not allowed due to adjacent buildings.
4. For Table 1, see Sheet 7 of 7.
5. All structural steel shall be galvanized or metalized (thermal spraying).
6. Three traffic lanes must be maintained in each direction at all times along I-90/94.
7. For Adams Entrance Ramp Plan and Elevation, see Sheet 2 of 7.
8. Work this sheet with Sheet 2 of 7.

GENERAL PLAN & ELEVATION
ADAMS STREET OVER
F.A.I. 90/94 (KENNEDY EXPRESSWAY)
F.A.U. RTE. 1421 - SECTION 2014-015 R&B-R
COOK COUNTY
STATION 8313+35.76
STRUCTURE NO. 016-1701

TranSystems

USER NAME = wjcollett1	DESIGNED - WJC	REVISED	
	CHECKED - MDS/TLR	REVISED	
PLOT SCALE = 32:0.0000 ':" / in.	DRAWN - WJC	REVISED	
PLOT DATE = 9/1/2017	CHECKED - MDS/TLR	REVISED	

STATE OF ILLINOIS
DEPARTMENT OF TRANSPORTATION

SHEET NO. 1 OF 7 SHEETS

F.A.U. RTE.	SECTION	COUNTY	TOTAL SHEETS	SHEET NO.
1421	2014-015 R&B-R	COOK	7	1
		CONTRACT NO. 60X94		
		ILLINOIS FED. AID PROJECT		

7:45:40 AM
016-1701-CIRCLE100-SHT-ACM-ST-TSL-001

NOTES:

1. Work this sheet with Sheet 1 of 7.
2. For Cross Sections, see Sheet 3 of 7.
3. For Legend, see Sheet 5 of 7.
4. For scupper locations, see Sheet 6 of 7.
5. For Table 2, see Sheet 7 of 7.
6. Offsets are measured from the ℄ Adams Entrance Ramp to the front face of the precast panel. Elevations are shown at the top of the barrier.
7. Span lengths are measured along the ℄ Adams Entrance Ramp.

APPROVED
SEP 13 2017
AS A BASIS FOR PREPARATION OF DETAILED PLANS

CURVE DATA
(℄ NB C-D Road)

P-NCD-NX-6
P.I. Sta. = 6345+36.95
Δ = 5°12'37" (LT)
D = 1°05'35"
R = 5,242.00'
T = 238.51'
L = 476.70'
E = 5.42'
e = NC
T.R. = NA
S.E. Run = NA
P.C. Sta. = 6342+98.44
P.T. Sta. = 6347+75.14

CURVE DATA
(℄ Jackson Entrance Ramp)

P-JAC-NT-1
P.I. Sta. = 8242+19.75
Δ = 7°18'60" (RT)
D = 3°30'54"
R = 1,630.00'
T = 104.22'
L = 208.15'
E = 3.33'
e = 3.20%
T.R. = 52'
S.E. Run = 83'
P.C. Sta. = 8241+15.53
P.T. Sta. = 8243+23.68

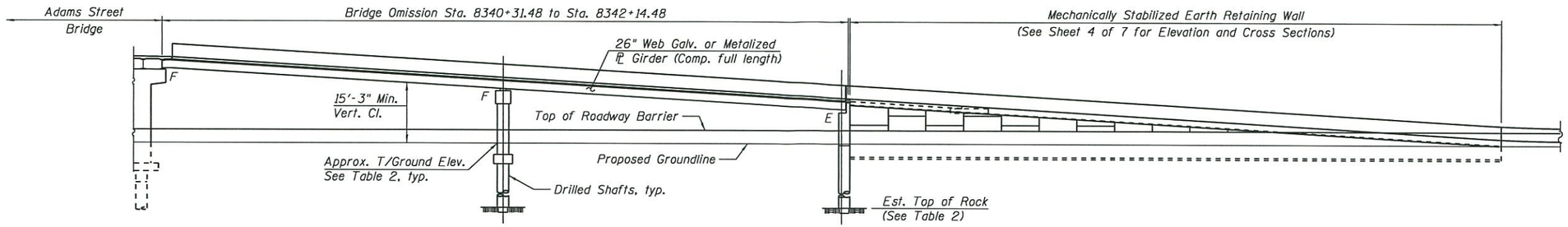

ELEVATION

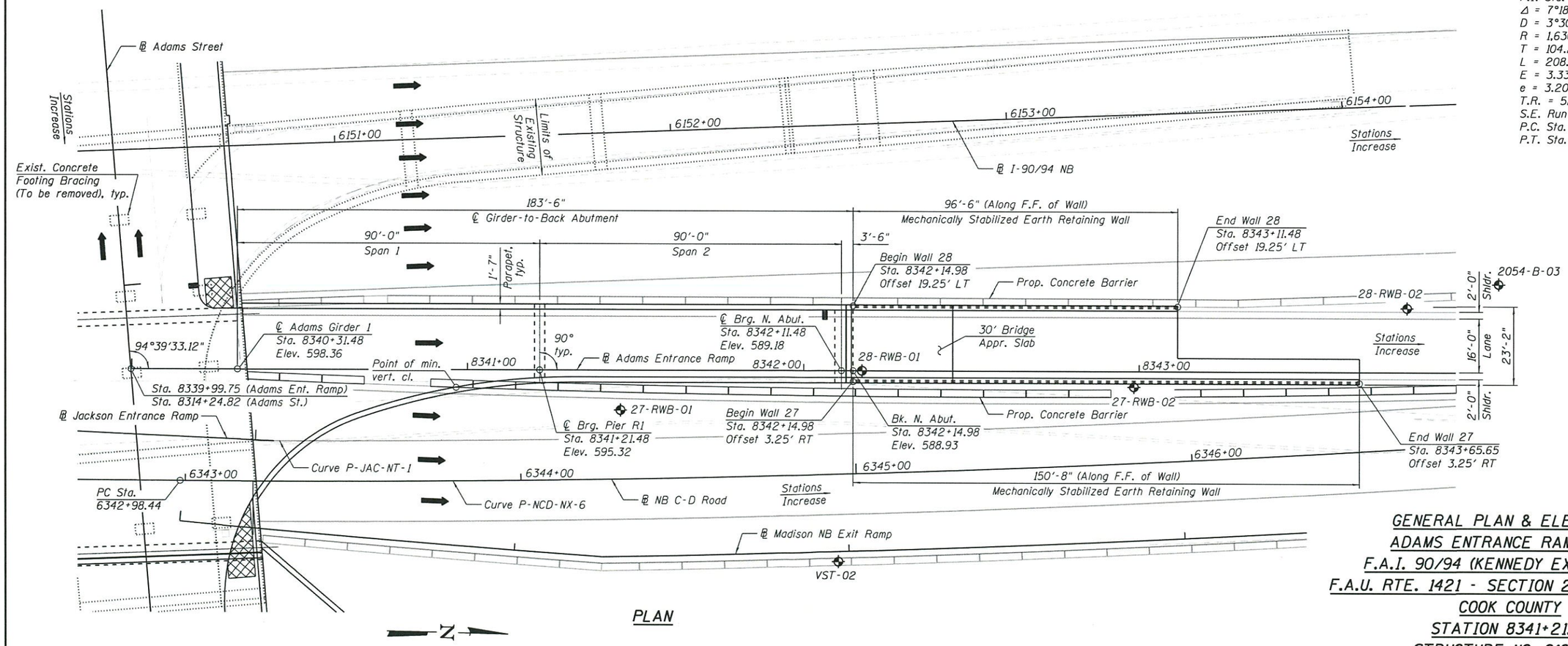

PLAN

GENERAL PLAN & ELEVATION
ADAMS ENTRANCE RAMP OVER
F.A.I. 90/94 (KENNEDY EXPRESSWAY)
F.A.U. RTE. 1421 - SECTION 2014-015 R&B-R
COOK COUNTY
STATION 8341+21.48
STRUCTURE NO. 016-1701

USER NAME = wjcolletti	DESIGNED - WJC	REVISED	
	CHECKED - MDS/TLR	REVISED	
PLOT SCALE = 32:0.0000 ':' / in.	DRAWN - WJC	REVISED	
PLOT DATE = 9/1/2017	CHECKED - MDS/TLR	REVISED	

TranSystems

STATE OF ILLINOIS
DEPARTMENT OF TRANSPORTATION

SHEET NO. 2 OF 7 SHEETS

F.A.U. RTE.	SECTION	COUNTY	TOTAL SHEETS	SHEET NO.
1421	2014-015 R&B-R	COOK	7	2
		CONTRACT NO. 60X94		
	ILLINOIS	FED. AID PROJECT		

7:54:44 AM
016-1701-CIRCLE100-SHT-ACM-ST-TSL-002

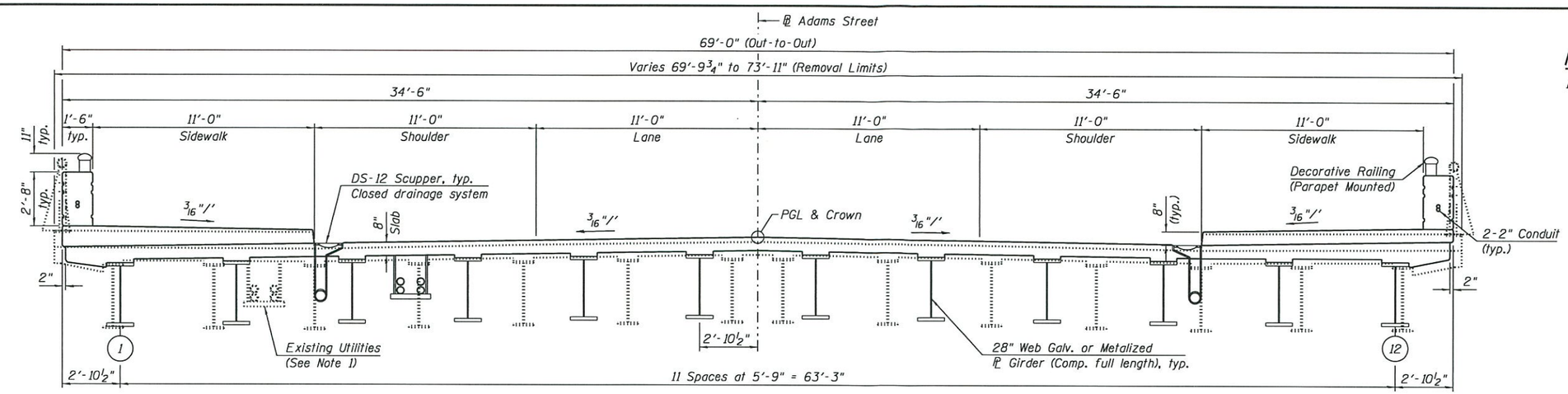

CROSS SECTION - ADAMS STREET

(Looking East)

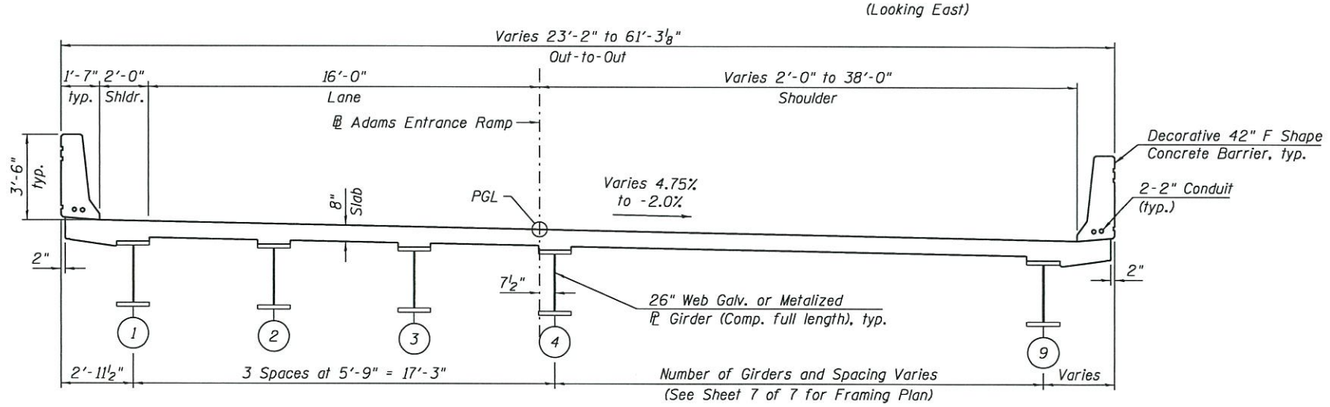

CROSS SECTION - ADAMS ENTRANCE RAMP

(Looking North, Sta. 8340+31.48 to Sta. 8341+21.48)
(Dimensions are measured perpendicular to ℄ Adams Entrance Ramp)

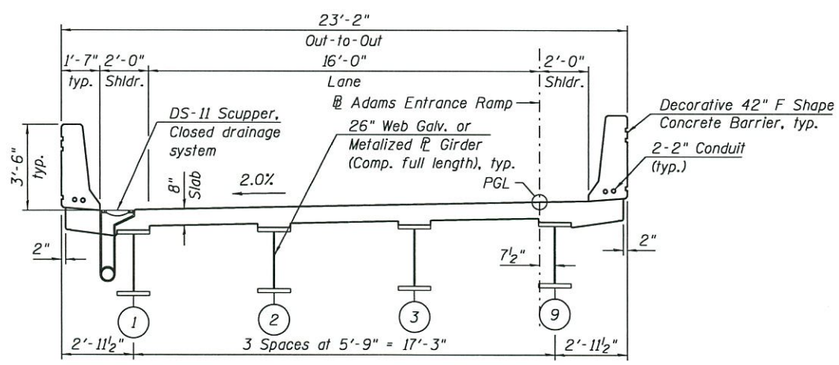

CROSS SECTION - ADAMS ENTRANCE RAMP

(Looking North, Sta. 8341+21.48 to Sta. 8342+11.48)
(Dimensions are measured perpendicular to ℄ Adams Entrance Ramp)

NOTES:

1. Existing utilities between girders will be relocated by the utility owner to provide uninterrupted service during construction. Provisions will be made to accomodate the existing utilities into the proposed structure.

APPROVED

SEP 13 2017

AS A BASIS FOR PREPARATION OF DETAILED PLANS

CROSS SECTION AND DETAILS
ADAMS STREET OVER
F.A.I. 90/94 (KENNEDY EXPRESSWAY)
F.A.U. RTE. 1421 - SECTION 2014-015 R&B-R
COOK COUNTY
STATION 8313+35.76
STRUCTURE NO. 016-1701

7:56:13 AM
016-1701-CIRCLE100-SHT-ACM-ST-TSL-003

TranSystems

USER NAME = wjcollett1	DESIGNED - WJC	REVISED	
	CHECKED - MDS/TLR	REVISED	
PLOT SCALE = 6:0.0000 ':" / in.	DRAWN - WJC	REVISED	
PLOT DATE = 9/1/2017	CHECKED - MDS/TLR	REVISED	

STATE OF ILLINOIS
DEPARTMENT OF TRANSPORTATION

SHEET NO. 3 OF 7 SHEETS

F.A.U. RTE.	SECTION	COUNTY	TOTAL SHEETS	SHEET NO.
1421	2014-015 R&B-R	COOK	7	3
		CONTRACT NO. 60X94		
	ILLINOIS	FED. AID PROJECT		

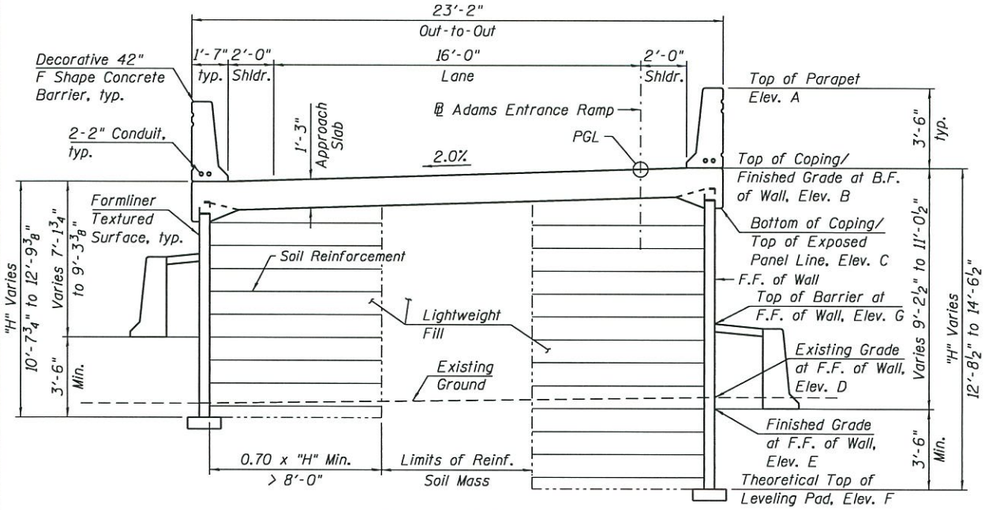

CROSS SECTION

(Looking Upstation, Sta. 8342+14.98 to 8342+44.48)

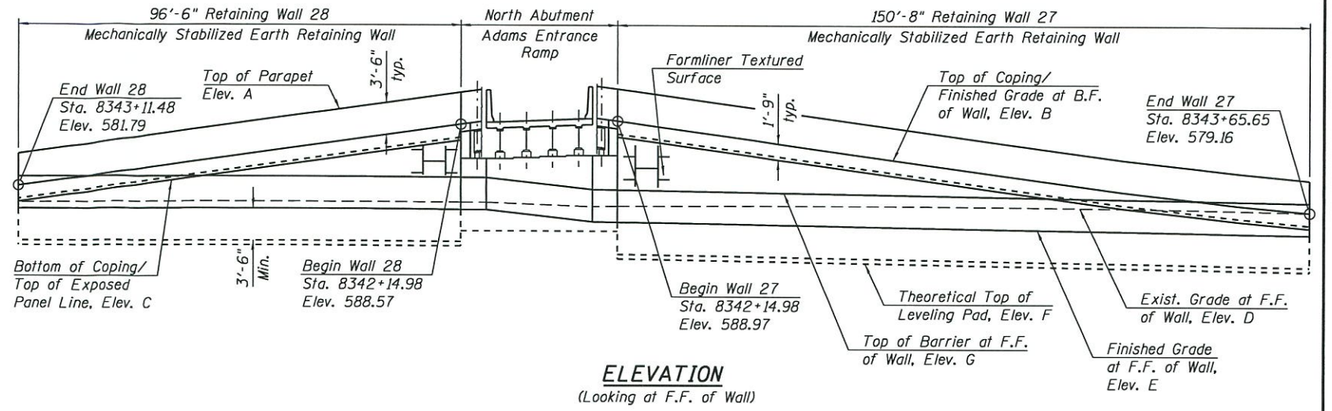

ELEVATION

(Looking at F.F. of Wall)

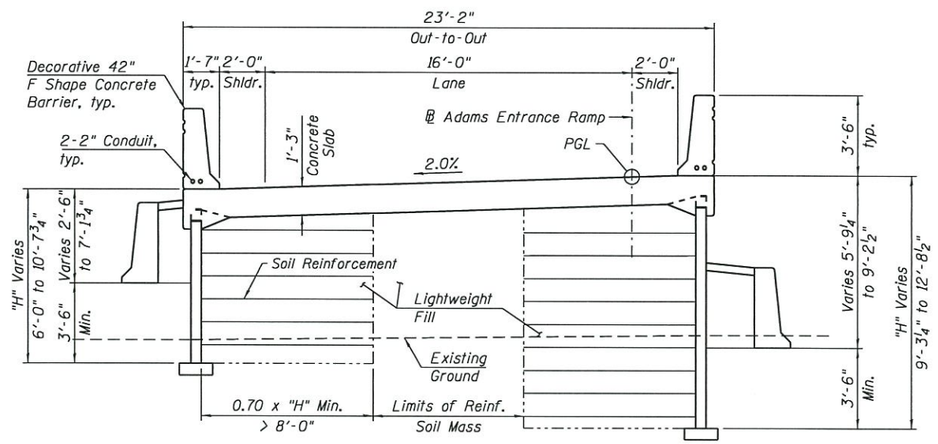

CROSS SECTION

(Looking Upstation, Sta. 8342+44.48 to 8343+11.48)

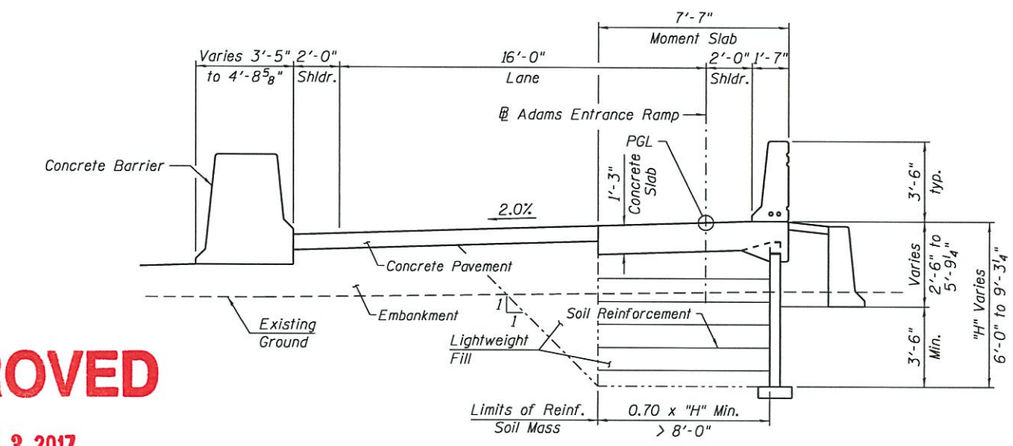

CROSS SECTION

(Looking Upstation, Sta. 8343+11.48 to 8343+65.65)

APPROVED

SEP 13 2017

AS A BASIS FOR PREPARATION OF DETAILED PLANS

Elevation A - Top of Parapet
Elevation B - Top of Coping / Finished Grade at B.F. of Wall
Elevation C - Bottom of Coping / Top of Exposed Panel Line
Elevation D - Existing Grade at F.F. of Wall
Elevation E - Finished Grade at F.F. of Wall
Elevation F - Theoretical Top of Leveling Pad
Elevation G - Top of Barrier at F.F. of Wall

RETAINING WALL 27 ELEVATIONS

Station	Offset	Elevation A	Elevation B	Elevation C	Elevation D	Elevation E	Elevation F	Elevation G
8342+14.98	3.25' Rt.	592.47	588.97	587.22	579.67	577.93	574.43	581.43
8342+25.00	3.25' Rt.	591.77	588.27	586.52	579.69	577.85	574.35	581.35
8342+44.48	3.25' Rt.	590.40	586.90	585.15	579.72	577.70	574.20	581.20
8342+50.00	3.25' Rt.	590.01	586.51	584.76	579.73	577.65	574.15	581.15
8342+75.00	3.25' Rt.	588.26	584.76	583.01	579.73	577.44	573.94	580.94
8343+00.00	3.25' Rt.	586.50	583.00	581.25	579.65	577.22	573.72	580.72
8343+25.00	3.25' Rt.	584.80	581.30	579.55	579.52	577.01	573.51	580.51
8343+50.00	3.25' Rt.	583.39	579.89	578.14	579.32	576.80	573.30	580.30
8343+65.65	3.25' Rt.	582.66	579.16	577.41	579.17	576.67	573.17	580.17

RETAINING WALL 28 ELEVATIONS

Station	Offset	Elevation A	Elevation B	Elevation C	Elevation D	Elevation E	Elevation F	Elevation G
8342+14.98	19.25' Lt.	592.07	588.57	586.82	580.06	579.29	575.79	582.79
8342+25.00	19.25' Lt.	591.37	587.87	586.12	580.08	579.32	575.82	582.82
8342+44.48	19.25' Lt.	590.00	586.50	584.75	580.13	579.36	575.86	582.86
8342+50.00	19.25' Lt.	589.61	586.11	584.36	580.15	579.36	575.86	582.86
8342+75.00	19.25' Lt.	587.86	584.36	582.61	580.12	579.36	575.86	582.86
8343+00.00	19.25' Lt.	586.10	582.60	580.85	580.04	579.33	575.83	582.83
8343+11.48	19.25' Lt.	585.29	581.79	580.04	580.00	579.30	575.80	582.80

MSE WALL ELEVATION & CROSS SECTIONS
ADAMS ENTRANCE RAMP OVER
F.A.I. 90/94 (KENNEDY EXPRESSWAY)
F.A.U. RTE. 1421 - SECTION 2014-015 R&B-R
COOK COUNTY
STATION 8342+14.98 TO 8343+65.65
STRUCTURE NO. 016-1701

8:21:13 AM
016-1701-CIRCLE100-SHT-ACM-ST-TSL-004

TranSystems

USER NAME = wjcolletti	DESIGNED - WJC	REVISED	
	CHECKED - MDS/TLR	REVISED	
PLOT SCALE = 32:0.0000 ':' / in.	DRAWN - WJC	REVISED	
PLOT DATE = 9/1/2017	CHECKED - MDS/TLR	REVISED	

STATE OF ILLINOIS
DEPARTMENT OF TRANSPORTATION

SHEET NO. 4 OF 7 SHEETS

F.A.U. RTE.	SECTION	COUNTY	TOTAL SHEETS	SHEET NO.
1421	2014-015 R&B-R	COOK	7	4
		CONTRACT NO. 60X94		
		ILLINOIS FED. AID PROJECT		

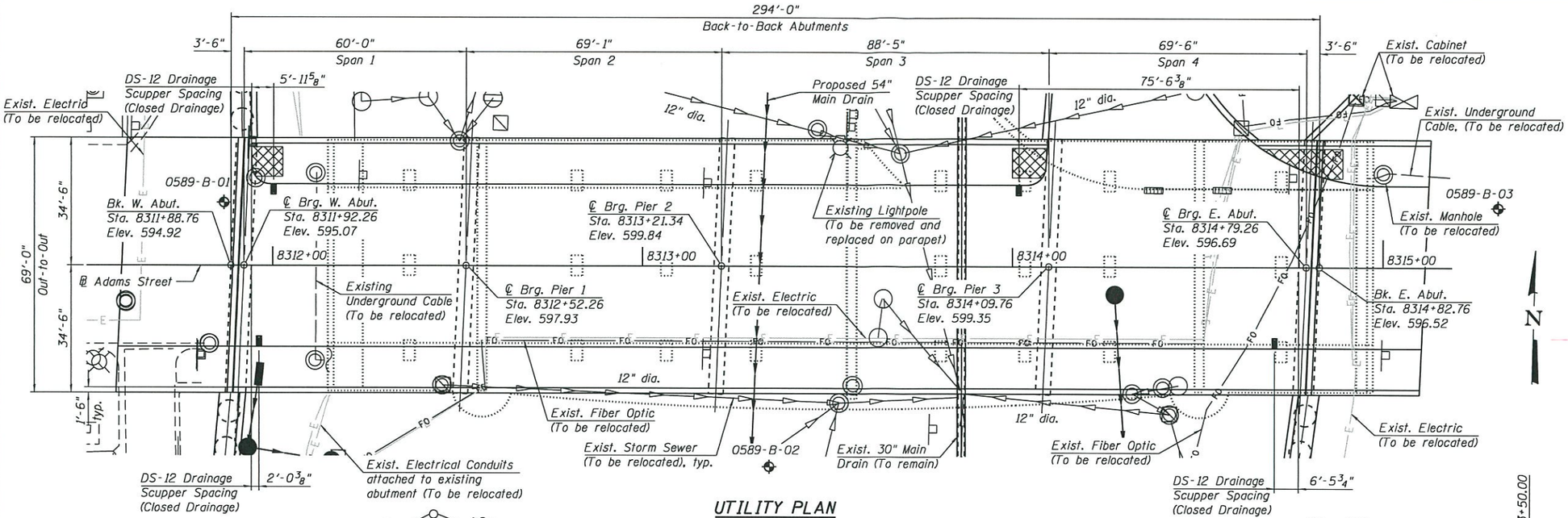

UTILITY PLAN

NOTES:

1. Existing utilities between girders will be relocated by the utility owner to provide uninterrupted service during construction. Provisions will be made to accomodate the existing utilities into the proposed structure.
2. All proposed drainage structure locations along I-90/94 mainline are conceptual at this stage and are subject to refinement during final design.

LEGEND:

- Electric
- Prop. Storm Sewer
- Exist. Storm Sewer
- ITS Fiber Optic
- Underground Cable
- Light Pole
- Soil Boring
- Exist. Drainage Structure
- Prop. Drainage Structure

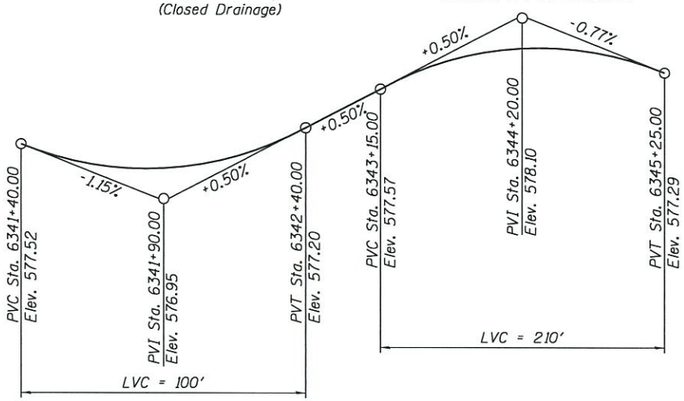

PROFILE GRADE
(℄ NB C-D Road)

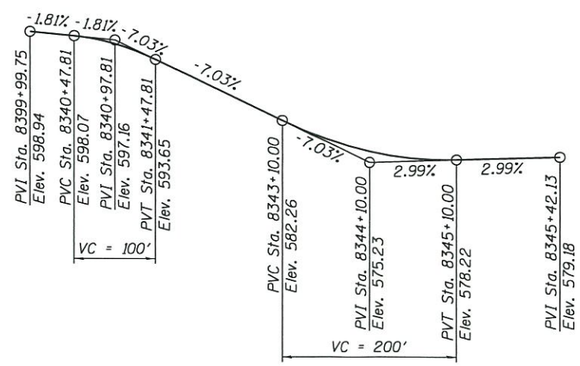

PROFILE GRADE
(℄ Adams Entrance Ramp)

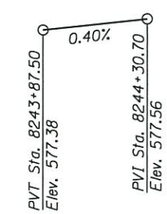

PROFILE GRADE
(℄ Jackson Entrance Ramp)

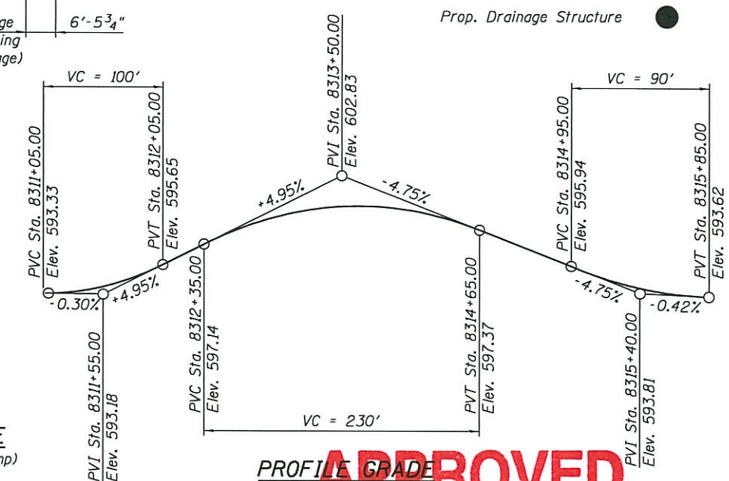

PROFILE GRADE
(℄ Adams Street)

APPROVED
SEP 13 2017
AS A BASIS FOR PREPARATION OF DETAILED PLANS

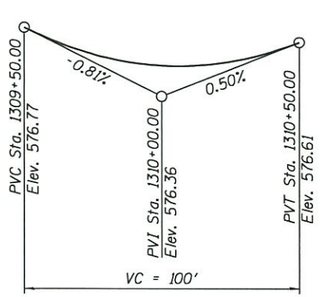

PROFILE GRADE
(℄ Ramp SW)

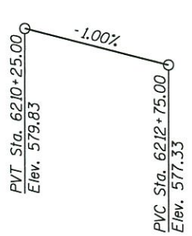

PROFILE GRADE
(℄ I-90/94 SB)

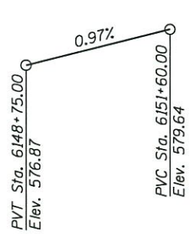

PROFILE GRADE
(℄ I-90/94 NB)

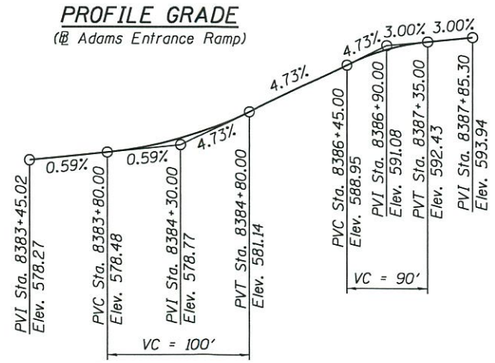

PROFILE GRADE
(℄ Adams Exit Ramp)

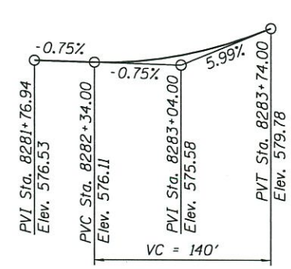

PROFILE GRADE
(℄ Jackson Exit Ramp)

UTILITY PLAN & PROFILES
ADAMS STREET OVER
F.A.I. 90/94 (KENNEDY EXPRESSWAY)
F.A.U. RTE. 1421 - SECTION 2014-015 R&B-R
COOK COUNTY
STATION 8313+35.76
STRUCTURE NO. 016-1701

TranSystems	USER NAME = wjcolettl	DESIGNED - WJC	REVISED
		CHECKED - MDS/TLR	REVISED
	PLOT SCALE = 32:0.0000 ':" / in.	DRAWN - WJC	REVISED
	PLOT DATE = 9/1/2017	CHECKED - MDS/TLR	REVISED

STATE OF ILLINOIS
DEPARTMENT OF TRANSPORTATION

SHEET NO. 5 OF 7 SHEETS

F.A.U. RTE.	SECTION	COUNTY	TOTAL SHEETS	SHEET NO.
1421	2014-015 R&B-R	COOK	7	5
		CONTRACT NO. 60X94		
		ILLINOIS FED. AID PROJECT		

8:22:19 AM
016-1701-CIRCLE100-SHT-ACM-ST-TSL-005

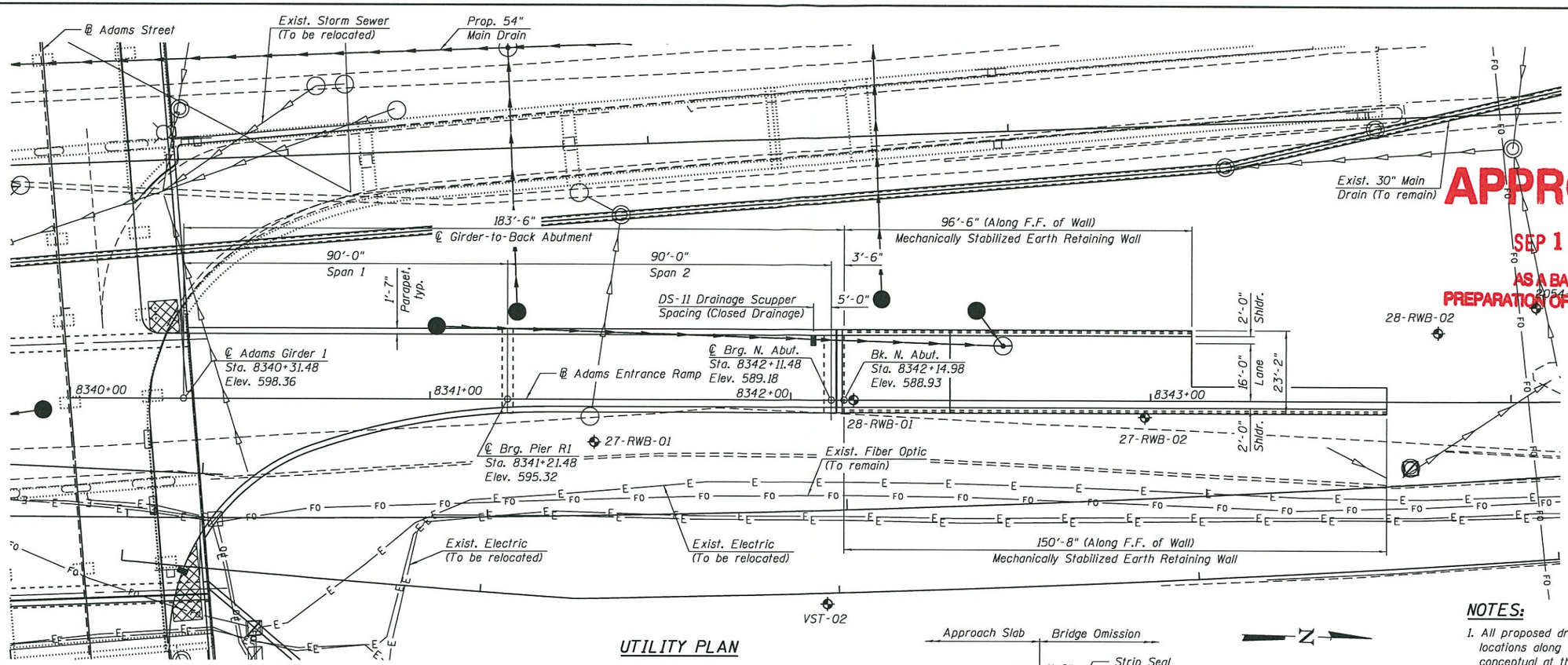

UTILITY PLAN

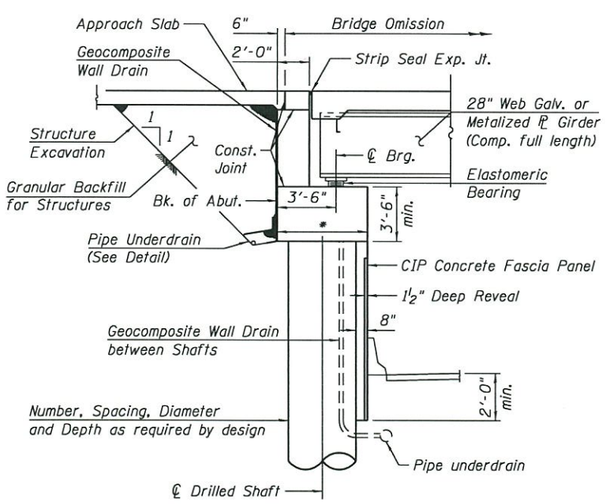

SECTION THRU WEST ABUTMENT

(Horiz. dim. at Rt. L's)

* Cap width to be determined during final design.

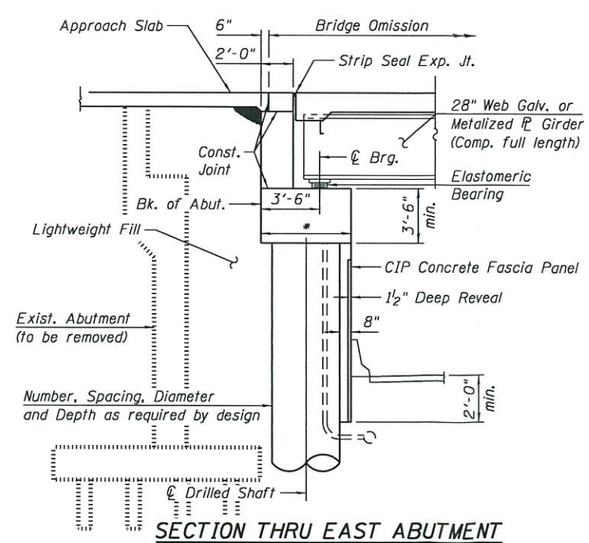

SECTION THRU EAST ABUTMENT

(Horiz. dim. at Rt. L's)

* Cap width to be determined during final design.

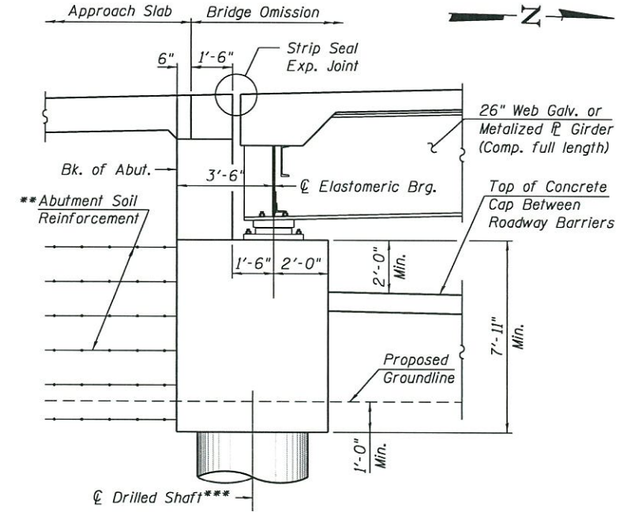

SECTION THRU NORTH ABUTMENT

(Horiz. dim. at Rt. L's)

**Abutment Soil Reinforcement to resist lateral loads in lieu of drilled shafts

***Number, spacing, diameter and depth as required by design

NOTES:

1. All proposed drainage structure locations along I-90/94 mainline are conceptual at this stage and are subject to refinement during final design.

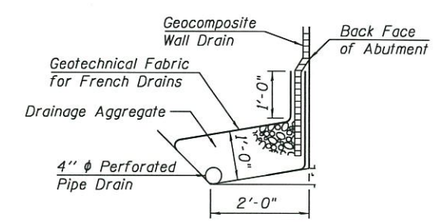

PIPE UNDERDRAIN DETAIL AT WEST ABUTMENT

UTILITY PLAN AND DETAILS
ADAMS ENTRANCE RAMP OVER
F.A.I. 90/94 (KENNEDY EXPRESSWAY)
F.A.U. RTE. 1421 - SECTION 2014-015 R&B-R
COOK COUNTY
STATION 8341+21.48
STRUCTURE NO. 016-1701

8:29:29 AM
016-1701-CIRCLE100-SHT-ACM-ST-TSL-006

TranSystems

USER NAME = wjcollettl	DESIGNED - WJC	REVISED	
	CHECKED - MDS/TLR	REVISED	
PLOT SCALE = 32:0.0000 ':" / in.	DRAWN - WJC	REVISED	
PLOT DATE = 9/1/2017	CHECKED - MDS/TLR	REVISED	

STATE OF ILLINOIS
DEPARTMENT OF TRANSPORTATION

SHEET NO. 6 OF 7 SHEETS

F.A.U. RTE.	SECTION	COUNTY	TOTAL SHEETS	SHEET NO.
1421	2014-015 R&B-R	COOK	7	6
		CONTRACT NO. 60X94		
		ILLINOIS FED. AID PROJECT		

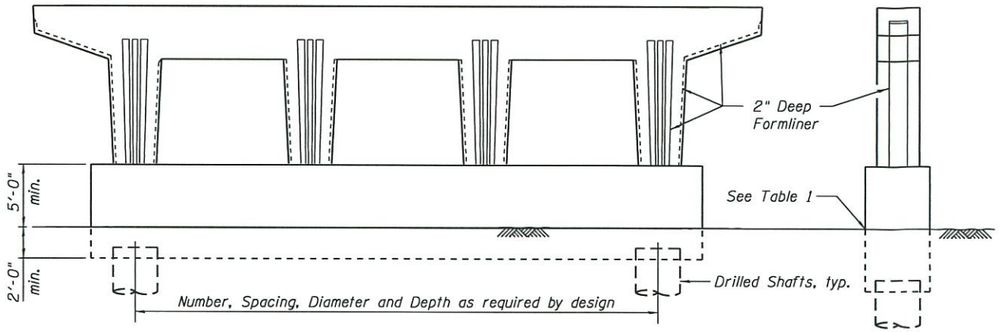

PIER SKETCH - ADAMS STREET

END VIEW

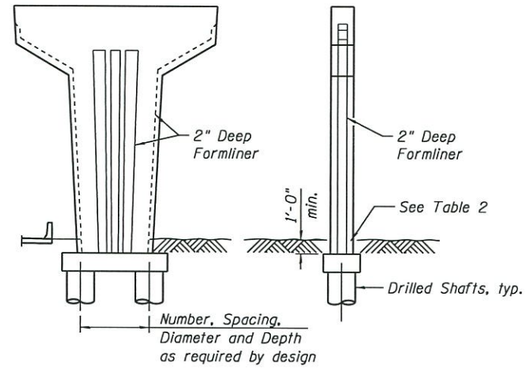

PIER SKETCH - ADAMS ENTRANCE RAMP

TABLE 1

Pier	Approx. T/Ground Elev.	Approx. T/Rock Elev.
W. Abut.	576.04	501.10
1	575.85	489.00
2	577.41	489.00
3	577.20	489.00
E. Abut.	576.87	490.00

TABLE 2

Pier	Approx. T/Ground Elev.	Approx. T/Rock Elev.
R1	578.32	483.00
N. Abut.	577.97	479.40

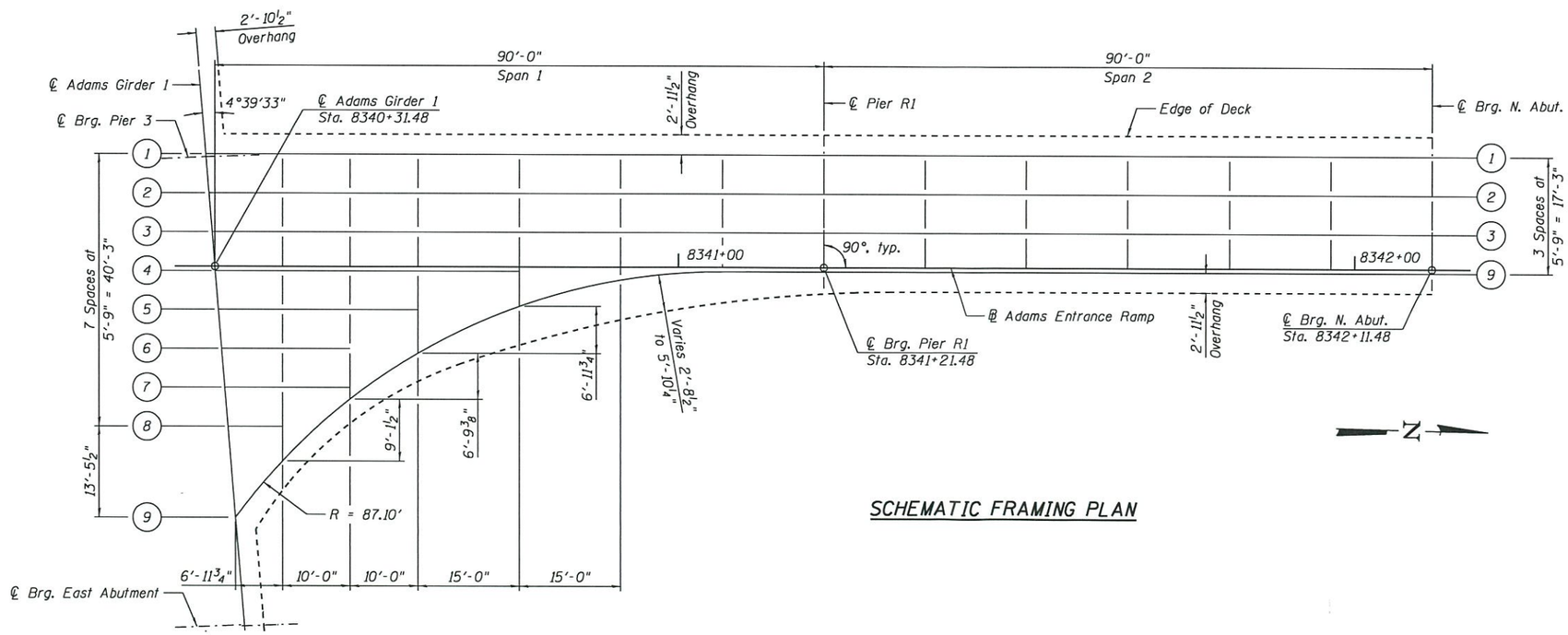

SCHEMATIC FRAMING PLAN

NOTES:

1. Location of bolted field splices and cross frames to be determined during final design.
2. Span lengths are measured along the ℄ Adams Entrance Ramp.

APPROVED

SEP 13 2017

AS A BASIS FOR PREPARATION OF DETAILED PLANS

FRAMING PLAN & DETAILS
ADAMS ENTRANCE RAMP OVER
F.A.I. 90/94 (KENNEDY EXPRESSWAY)
F.A.U. RTE. 1421 - SECTION 2014-015 R&B-R
COOK COUNTY
STATION 8341+21.48
STRUCTURE NO. 016-1701

8:30:28 AM
016-1701-CIRCLE100-SHT-ACM-ST-TSL-007

TranSystems

USER NAME = wjcollettl	DESIGNED - WJC	REVISED	
	CHECKED - MDS/TLR	REVISED	
PLOT SCALE = 20:0.0000 ':' / in.	DRAWN - WJC	REVISED	
PLOT DATE = 9/1/2017	CHECKED - MDS/TLR	REVISED	

STATE OF ILLINOIS
DEPARTMENT OF TRANSPORTATION

SHEET NO. 7 OF 7 SHEETS

F.A.U. RTE.	SECTION	COUNTY	TOTAL SHEETS	SHEET NO.
1421	2014-015 R&B-R	COOK	7	7
		CONTRACT NO. 60X94		
		ILLINOIS FED. AID PROJECT		