Bench Mark: Chisel "X" on chain bolt of fire hydrant in front of 555 W. Harrison St. Elev. 594.46.

Existing Structure: SN 016-2452. Constructed in 1960 under F.A.I. Route 1, Section 2424.28-B. Fourteen span bridge that measures 787'-4" from back of north abutment to centerline of east pier. Out-to-out width of 29'-0". The spans are supported by 36" wide flange beams, concrete T-beams and a reinforced concrete slab. Substructure is reinforced concrete closed abutment, multi-column and solid wall piers founded on bell caissons. The existing bridge is to be removed and replaced.

The existing bridge will be closed and traffic will be detoured during construction. Traffic on I-290 and I-90/94 will be maintained with stage construction.

No Salvage.

APPROVED

JAN 23 2018

AS A BASIS FOR PREPARATION OF DETAILED PLANS

SEISMIC DATA

Seismic Performance Zone (SPZ) = 1
Design Spectral Acceleration at 1.0 sec. (S_{D1}) = 0.125g
Design Spectral Acceleration at 0.2 sec. (S_{DS}) = 0.225g
Soil Site Class = E

DESIGN SPECIFICATIONS

2014 AASHTO LRFD Bridge Design Specifications
7th Edition with 2015 and 2016 Interim Specifications

DESIGN STRESSES

FIELD UNITS

f'c = 3,500 psi
f'c = 4,000 psi (Superstructure Concrete)
fy = 60,000 psi (Reinforcement)
fy = 50,000 psi (M270 Grade 50)

LOADING HL-93

Allow 50#/sq. ft. for future wearing surface.

HIGHWAY CLASSIFICATION

Ramp SE
Functional Class: Interstate
ADT: 4,600 (2010); 5,000 (2040)
ADTT: 123 (2012); 134 (2040)
DHV: 440 (2040)
Design Speed: 25 m.p.h.
Posted Speed: 25 m.p.h.
One-Way Traffic
Directional Distribution: 100%

Ramp NW
Functional Class: Interstate
ADT: 32,500 (2012); 39,000 (2040)
ADTT: 2,600 (2012); 2,730 (2040)
DHV: 2,790 (2040)
Design Speed: 35 m.p.h.
Posted Speed: 35 m.p.h.
One-Way Traffic
Directional Distribution: 100%

F.A.I. Rte. 290 EB
Functional Class: Interstate
ADT: 32,500 (2012); 33,000 (2040)
ADTT: 380 (2012); 386 (2040)
DHV: 2,610 (2040)
Design Speed: 50 m.p.h.
Posted Speed: 45 m.p.h.
One-Way Traffic
Directional Distribution: 100%

F.A.I. Rte. 290 WB
Functional Class: Interstate
ADT: 29,700 (2012); 31,000 (2040)
ADTT: 460 (2012); 480 (2040)
DHV: 2,130 (2040)
Design Speed: 45 m.p.h.
Posted Speed: 45 m.p.h.
One-Way Traffic
Directional Distribution: 100%

F.A.I. Rte. 90/94 SB
Functional Class: Interstate
ADT: 100,100 (2012); 98,000 (2040)
ADTT: 11,351 (2012); 11,113 (2040)
DHV: 6,340 (2040)
Design Speed: 60 m.p.h.
Posted Speed: 45 m.p.h.
One-Way Traffic
Directional Distribution: 100%

F.A.I. Rte. 90/94 NB
Functional Class: Interstate
ADT: 96,700 (2012); 81,000 (2040)
ADTT: 11,217 (2012); 9,396 (2040)
DHV: 4,780 (2040)
Design Speed: 60 m.p.h.
Posted Speed: 45 m.p.h.
One-Way Traffic
Directional Distribution: 100%

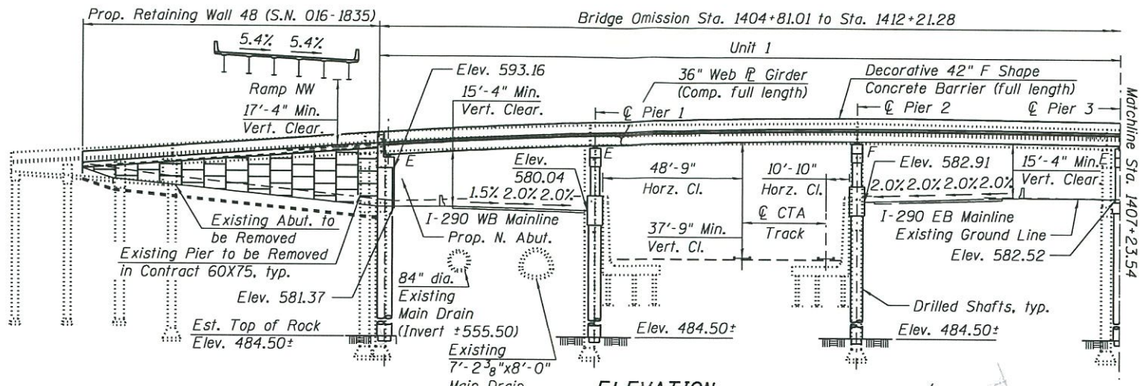

ELEVATION

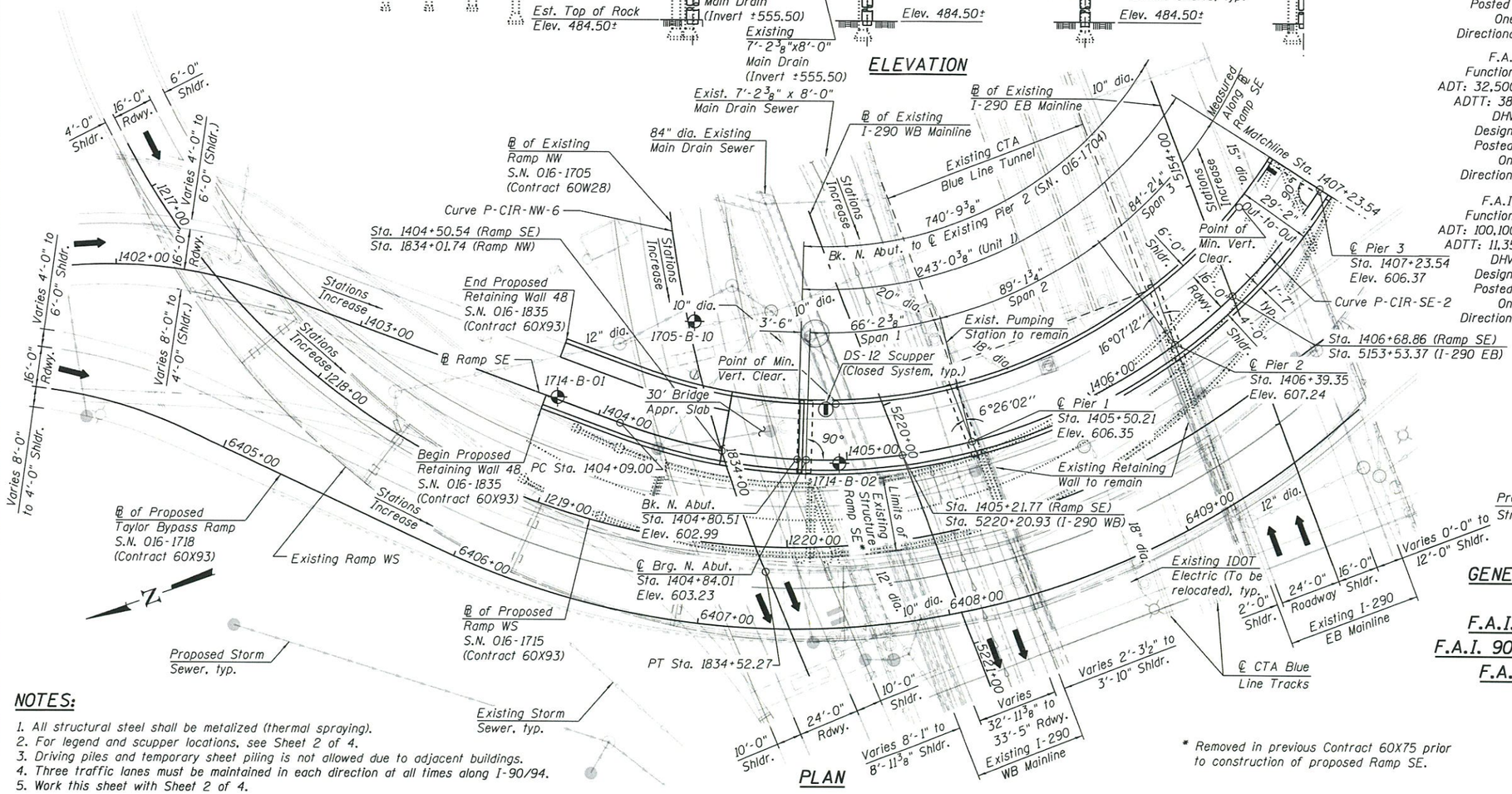

PLAN

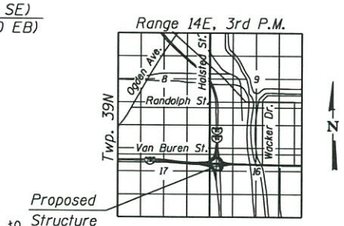

LOCATION SKETCH

NOTES:

1. All structural steel shall be metalized (thermal spraying).
2. For legend and scupper locations, see Sheet 2 of 4.
3. Driving piles and temporary sheet piling is not allowed due to adjacent buildings.
4. Three traffic lanes must be maintained in each direction at all times along I-90/94.
5. Work this sheet with Sheet 2 of 4.

* Removed in previous Contract 60X75 prior to construction of proposed Ramp SE.

GENERAL PLAN & ELEVATION - UNIT 1
RAMP SE OVER
F.A.I. 290 (EISENHOWER EXPRESSWAY), F.A.I. 90/94 (KENNEDY EXPRESSWAY) AND CTA
F.A.I. 94 (I-90/94 SB TO I-290 EB)
SECTION 2014-013 R&B-R
COOK COUNTY
STATION 1408+50.90
STRUCTURE NO. 016-1714

TranSystems

USER NAME = wjcollett1	DESIGNED - WJC	REVISED	
	CHECKED - MDS/JNP	REVISED	
PLOT SCALE = 48:0 ':" / in.	DRAWN - WJC	REVISED	
PLOT DATE = 1/18/2018	CHECKED - MDS/JNP	REVISED	

STATE OF ILLINOIS
DEPARTMENT OF TRANSPORTATION

SHEET NO. 1 OF 4 SHEETS

F.A.U. RTE.	SECTION	COUNTY	TOTAL SHEETS	SHEET NO.
90/94/290	2014-013 R&B-R	COOK	4	1
		CONTRACT NO. 60X93		
		ILLINOIS FED. AID PROJECT		

8:23:30 AM
016-1714-CIRCLE100-SHT-ACM-ST-TSL-001

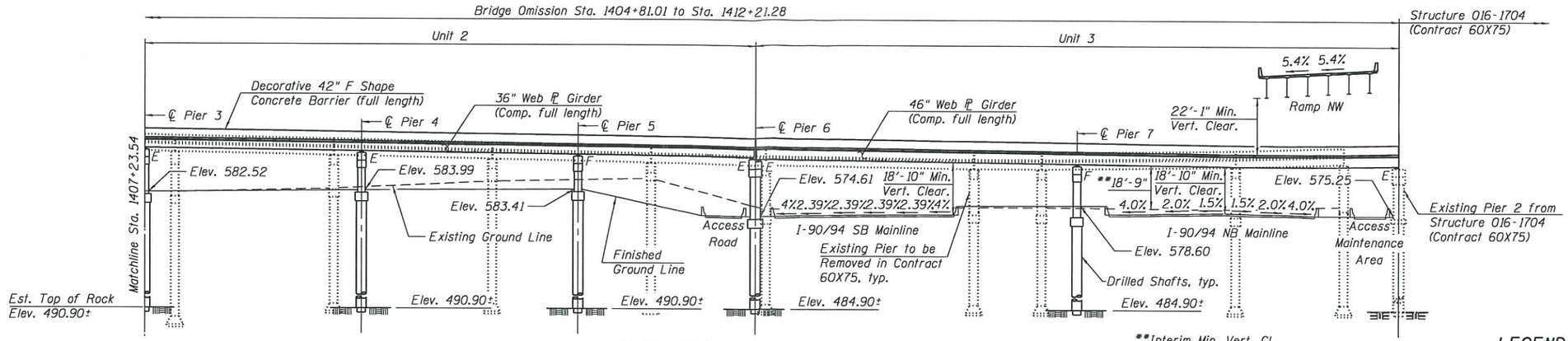

ELEVATION

SCUPPER LOCATION

Station	Offset
1404+91.80	22.00' LT.
1407+19.00	22.00' LT.
1409+61.00	22.00' LT.
1410+69.00	22.00' LT.
1410+89.00	22.00' LT.
1411+50.35	4.00' RT.
1411+60.00	4.00' RT.

LEGEND

Electric
Prop. Storm Sewer
Exist. Storm Sewer
Light Pole
Soil Boring

APPROVED

JAN 23 2018

AS A BASIS FOR PREPARATION OF DETAILED PLANS

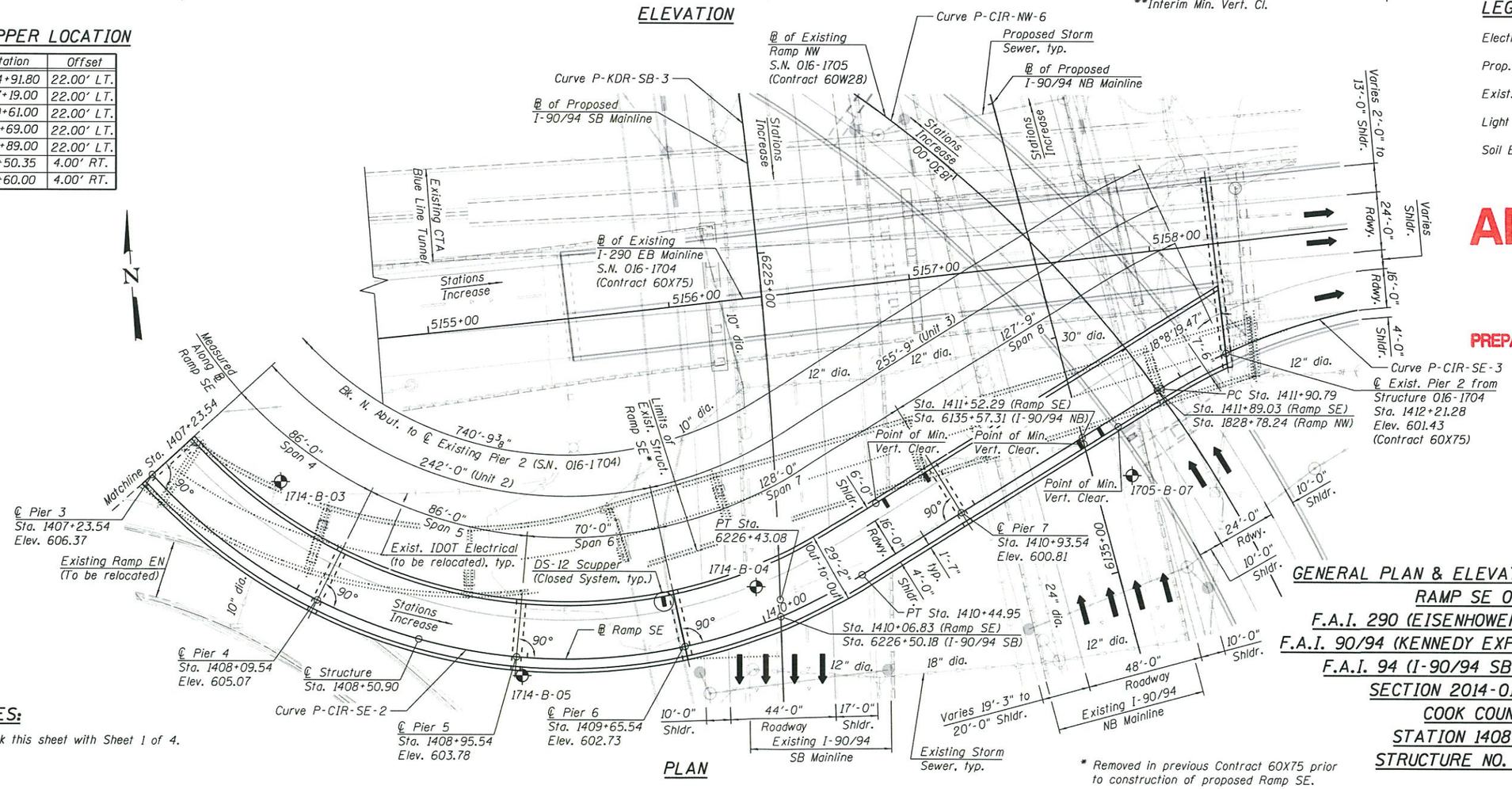

PLAN

* Removed in previous Contract 60X75 prior to construction of proposed Ramp SE.

NOTES:

1. Work this sheet with Sheet 1 of 4.

GENERAL PLAN & ELEVATION - UNITS 2&3
RAMP SE OVER
F.A.I. 290 (EISENHOWER EXPRESSWAY), F.A.I. 90/94 (KENNEDY EXPRESSWAY) AND CTA
F.A.I. 94 (I-90/94 SB TO I-290 EB)
SECTION 2014-013 R&B-R
COOK COUNTY
STATION 1408+50.90
STRUCTURE NO. 016-1714

TranSystems

USER NAME = wjcolletti	DESIGNED - WJC	REVISED	
	CHECKED - MDS/JNP	REVISED	
PLOT SCALE = 48:0 ':' / in.	DRAWN - WJC	REVISED	
PLOT DATE = 1/18/2018	CHECKED - MDS/JNP	REVISED	

STATE OF ILLINOIS
DEPARTMENT OF TRANSPORTATION

SHEET NO. 2 OF 4 SHEETS

F.A.U. RTE.	SECTION	COUNTY	TOTAL SHEETS	SHEET NO.
90/94/290	2014-013 R&B-R	COOK	4	2
		CONTRACT NO. 60X93		
		ILLINOIS FED. AID PROJECT		

B-32-31 AM
016-1714-CIRCLE100-SHT-ACM-ST-TSL-002

NOTES:

1. Direction of slope referenced from right edge of pavement.
   Constant Cross Slope (-5.60%) Sta. 1404+68.00 to Sta. 1409+90.00
   Slope Transition (-5.60% to 0.00%) Sta. 1409+90.00 to Sta. 1411+19.31
   Slope Transition (0.00% to 5.40%) Sta. 1411+19.31 to Sta. 1412+43.00

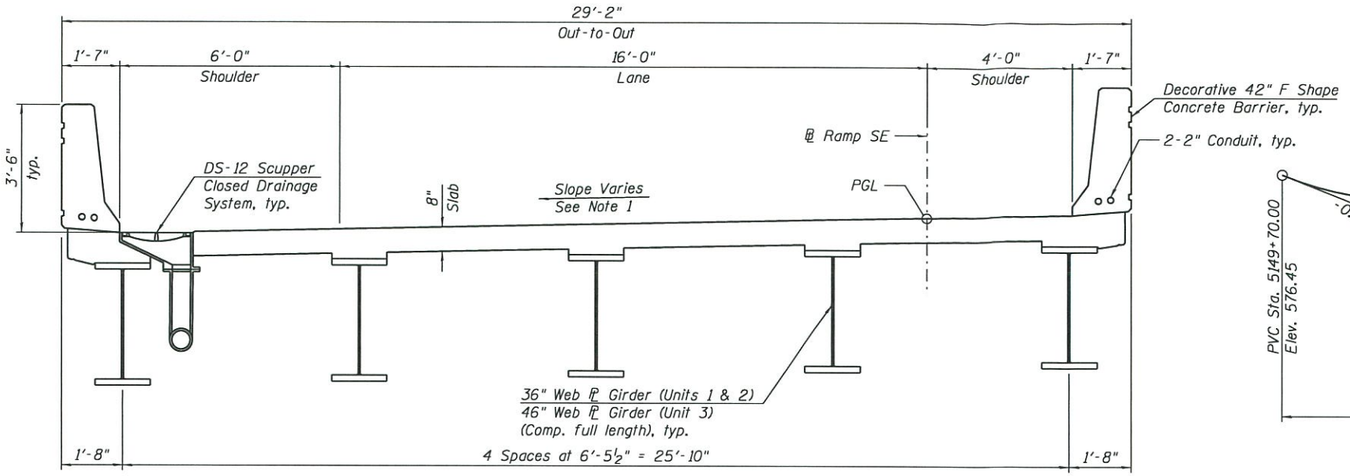

CROSS SECTION
(Looking Upstation)

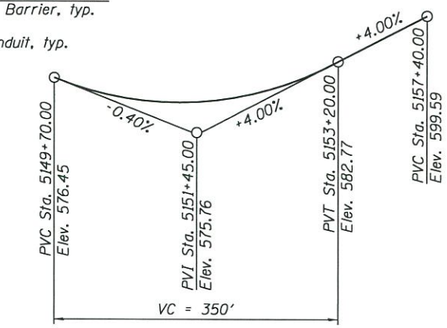

PROFILE GRADE
(Along ℄ EB I-290)

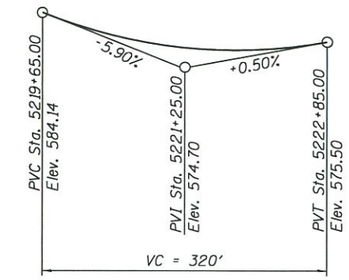

PROFILE GRADE
(Along ℄ WB I-290)

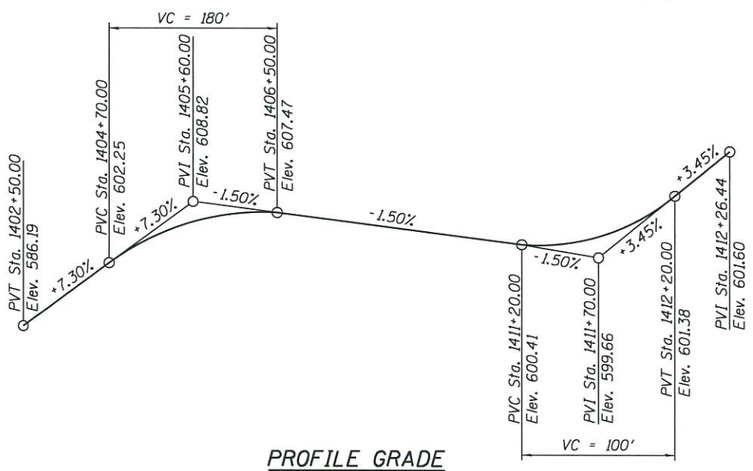

PROFILE GRADE
(Along ℄ Ramp SE)

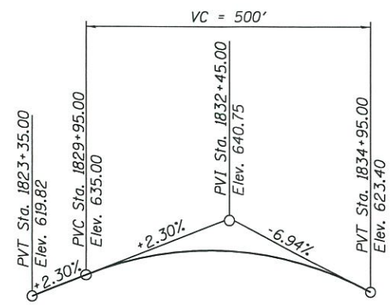

PROFILE GRADE
(Along ℄ Ramp NW)

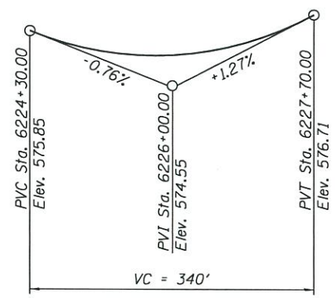

PROFILE GRADE
(Along ℄ SB I-90/94)

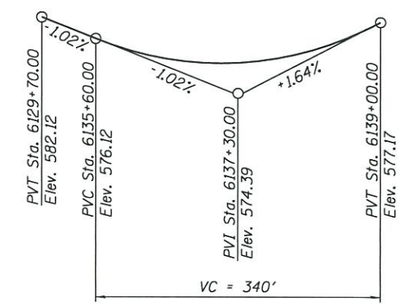

PROFILE GRADE
(Along ℄ NB I-90/94)

APPROVED

JAN 23 2018

AS A BASIS FOR
PREPARATION OF DETAILED PLANS

CURVE DATA
(Ramp SE)

P-CIR-SE-2
P.I. Sta. = 1415+83.08
Δ = 157°44'18" (LT)
D = 24°48'12"
R = 231.00'
T = 1174.08'
L = 635.96'
E = 965.59'
e = 5.6%
T.R. = NA
S.E. Run = 128'
P.C. Sta. = 1404+09.00
P.T. Sta. = 1410+44.95

P-CIR-SE-3
P.I. Sta. = 1412+44.91
Δ = 24°25'53" (RT)
D = 22°55'06"
R = 250.00'
T = 54.12'
L = 106.60'
E = 5.79'
e = 5.4%
T.R. = NA
S.E. Run = 78'
P.C. Sta. = 1411+90.79
P.T. Sta. = 1412+97.39

CURVE DATA
(Ramp NW)

P-CIR-NW-6
P.I. Sta. = 1831+44.22
Δ = 88°30'25" (LT)
D = 10°36'37"
R = 540.00'
T = 526.11'
L = 834.16'
E = 213.92'
e = 5.4%
T.R. = NA
S.E. Run = 66'
P.C. Sta. = 1826+18.11
P.T. Sta. = 1834+52.27

CURVE DATA
(F.A.I. Rte. SB 90/94)

P-KDR-SB-3
P.I. Sta. = 6224+30.06
Δ = 11°28'39" (RT)
D = 2°41'06"
R = 2,134.00'
T = 214.46'
L = 427.48'
E = 10.75'
e = 4.2%
T.R. = NA
S.E. Run = 203'
P.C. Sta. = 6222+15.60
P.T. Sta. = 6226+43.08

CROSS SECTION, PROFILE GRADES AND CURVE DATA
RAMP SE OVER
F.A.I. 290 (EISENHOWER EXPRESSWAY),
F.A.I. 90/94 (KENNEDY EXPRESSWAY) AND CTA
F.A.I. 94 (I-90/94 SB TO I-290 EB)
SECTION 2014-013 R&B-R
COOK COUNTY
STATION 1408+50.90
STRUCTURE NO. 016-1714

8:33:22 AM
016-1714-CIRCLE100-SHT-ACM-ST-TSL-003

TranSystems

USER NAME = wjcollett1	DESIGNED - WJC	REVISED	
	CHECKED - MDS/JNP	REVISED	
PLOT SCALE = 48:0 ':' / In.	DRAWN - WJC	REVISED	
PLOT DATE = 1/18/2018	CHECKED - MDS/JNP	REVISED	

STATE OF ILLINOIS
DEPARTMENT OF TRANSPORTATION

SHEET NO. 3 OF 4 SHEETS

F.A.U. RTE.	SECTION	COUNTY	TOTAL SHEETS	SHEET NO.
90/94/290	2014-013 R&B-R	COOK	4	3
		CONTRACT NO. 60X93		
		ILLINOIS FED. AID PROJECT		

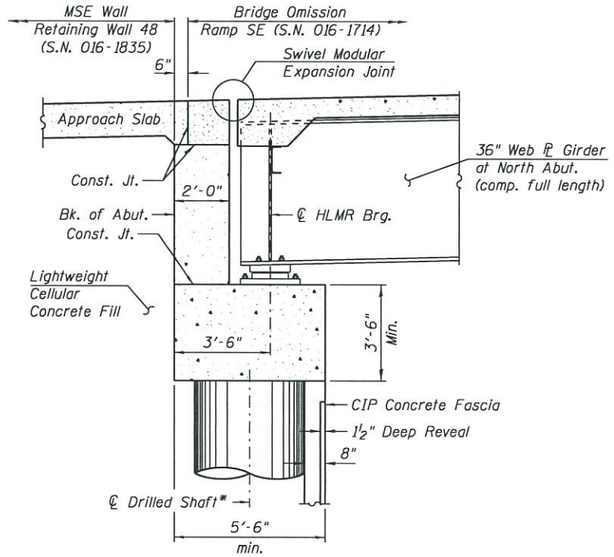

SECTION THRU ABUTMENT
(Horiz. Dim. @ Rt. L's)

* Size, spacing, depth and number to be determined in design.

APPROVED
JAN 23 2018
AS A BASIS FOR
PREPARATION OF DETAILED PLANS

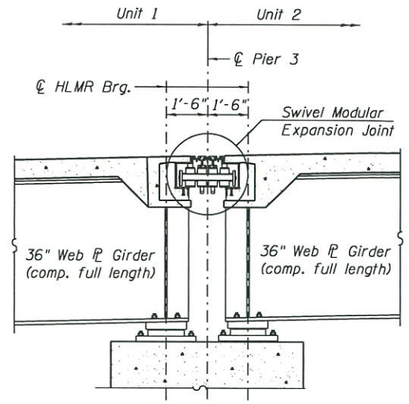

SECTION THRU EXP. PIER
(Horiz. Dim. @ Rt. L's)

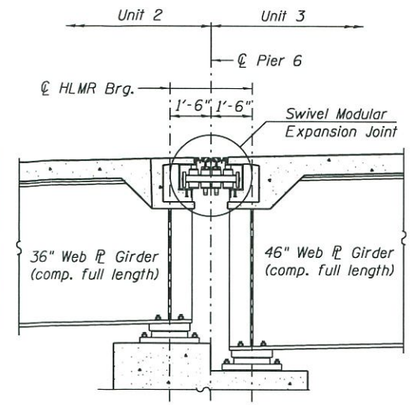

SECTION THRU EXP. PIER
(Horiz. Dim. @ Rt. L's)

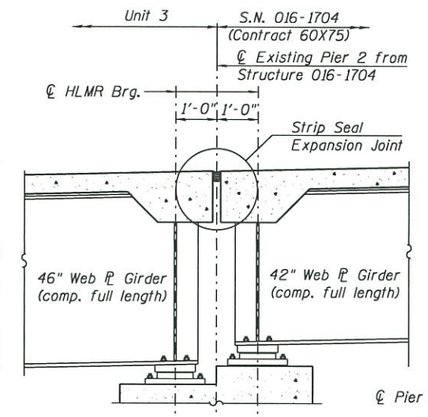

SECTION THRU EXP. PIER
(Horiz. Dim. @ Rt. L's)

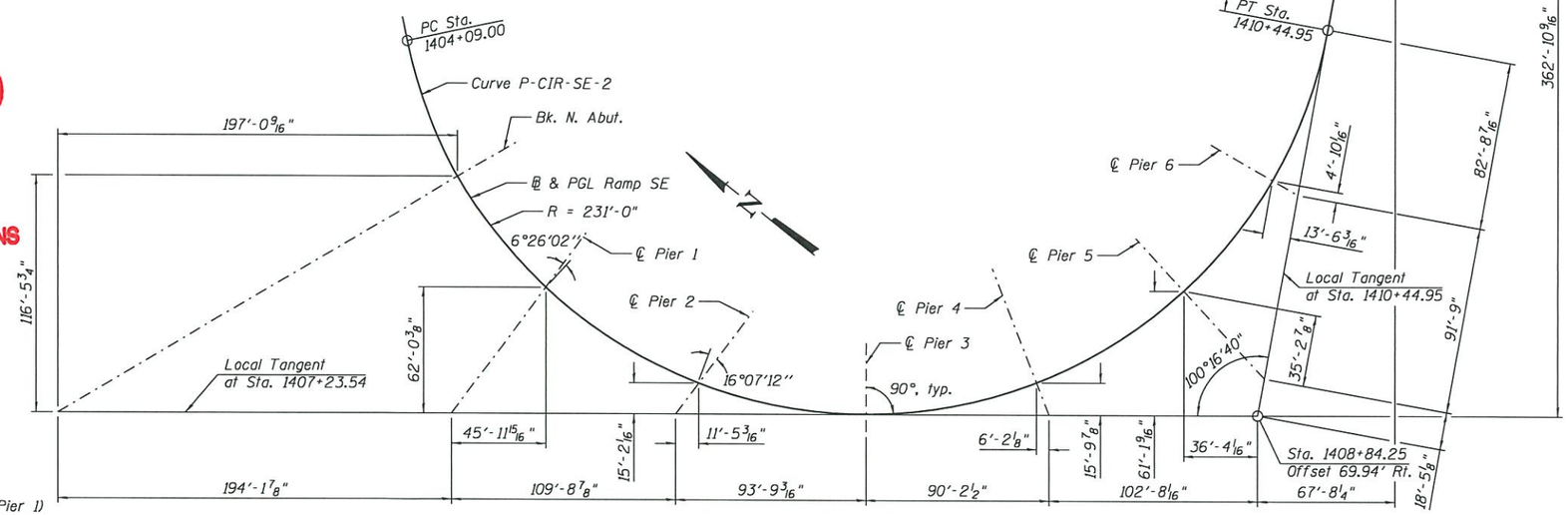

OFFSET SKETCH
(All piers are radial or perpendicular to ℙ Ramp SE unless noted otherwise.)

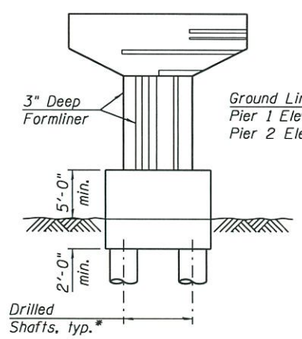

PIERS 1 AND 2 SKETCH

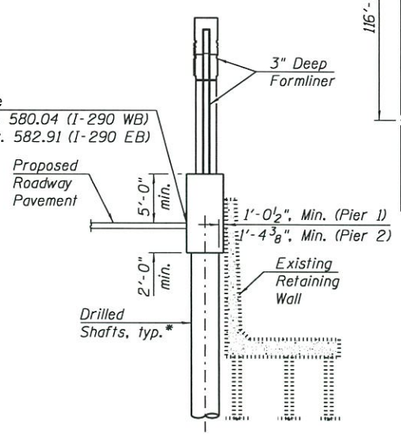

PIERS 1 AND 2 SIDE VIEW

Permanent casing will be required for drilled shafts at Piers 1 and 2.

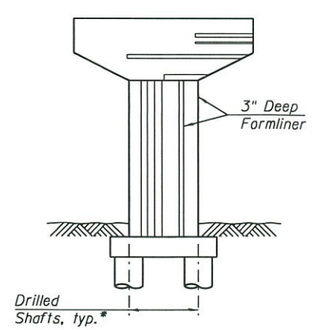

PIERS 3 THRU 7 SKETCH

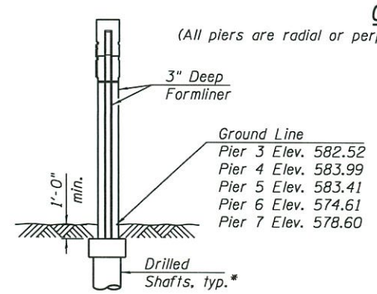

PIERS 3 THRU 7 SIDE VIEW

SECTION THRU ABUTMENT, PIER AND OFFSET SKETCH
RAMP SE OVER
F.A.I. 290 (EISENHOWER EXPRESSWAY),
F.A.I. 90/94 (KENNEDY EXPRESSWAY) AND CTA
F.A.I. 94 (I-90/94 SB TO I-290 EB)
SECTION 2014-013 R&B-R
COOK COUNTY
STATION 1408+50.90
STRUCTURE NO. 016-1714

8:40:19 AM
016-1714-CIRCLE100-SHT-ACM-ST-TSL-004

TranSystems

USER NAME = wjcollett1	DESIGNED - WJC	REVISED	
	CHECKED - MDS/JNP	REVISED	
PLOT SCALE = 72:0 ':" / in.	DRAWN - WJC	REVISED	
PLOT DATE = 1/18/2018	CHECKED - MDS/JNP	REVISED	

STATE OF ILLINOIS
DEPARTMENT OF TRANSPORTATION

SHEET NO. 4 OF 4 SHEETS

F.A.U. RTE.	SECTION	COUNTY	TOTAL SHEETS	SHEET NO.
90/94/290	2014-013 R&B-R	COOK	4	4
		CONTRACT NO. 60X93		
		ILLINOIS FED. AID PROJECT		