Bench Mark: Square cut at center of door entrance to 707 W. Harrison St; South side of Harrison St. ±90' west of west line of Des Plaines. Elevation 597.47.
A t cut in the SE anchor bolt at the 11th street light N. of Roosevelt on the W. side of Halsted. Elev. = 594.06

Existing Structure: S.N. 016-2450 was built in 1960 and carries WB I-290 traffic to SB I-90/94 over Ramp EN, Ramp NW, I-90/94, Ramp SE, I-290, CTA tracks & Ramp EN again. The existing twenty-span structure has an overall length of approx. 1329'-6". The existing superstructure consists of simple span wide-flange beams with 7 1/2" thick concrete deck with 1 1/2" overlay. The existing substructure consists of reinforced concrete abutment and multi-column piers. Existing substructure units are supported on caissons. Existing structure to be removed and replaced. Traffic to be detoured during construction.

No salvage.

APPROVED
FEB 01 2018
AS A BASIS FOR PREPARATION OF DETAILED PLANS

DESIGN SPECIFICATIONS

2014 AASHTO LRFD Bridge Design Specifications
8th Edition with 2015 and 2016 Interim Revisions

LOADING HL-93

Allow 50#/sq. ft. for future wearing surface.

DESIGN STRESSES

FIELD UNITS

f'c = 3,500 psi
f'c = 4,000 psi (Superstructure)
fy = 60,000 psi (Reinforcement)
fy = 50,000 psi (M270 Grade 50)

SEISMIC DATA

Seismic Performance Zone (SPZ) = 1
Design Spectral Acceleration at 1.0 sec. (S_{D1}) = 0.085g
Design Spectral Acceleration at 0.2 sec. (S_{DS}) = 0.144g
Soil Site Class = D

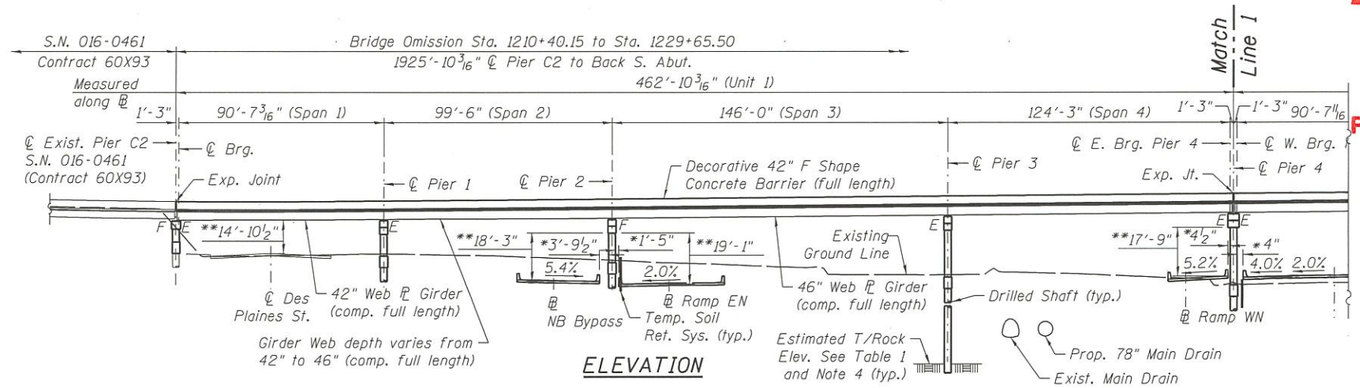

ELEVATION

* Min. Horizontal Clearance
** Min. Vertical Clearance

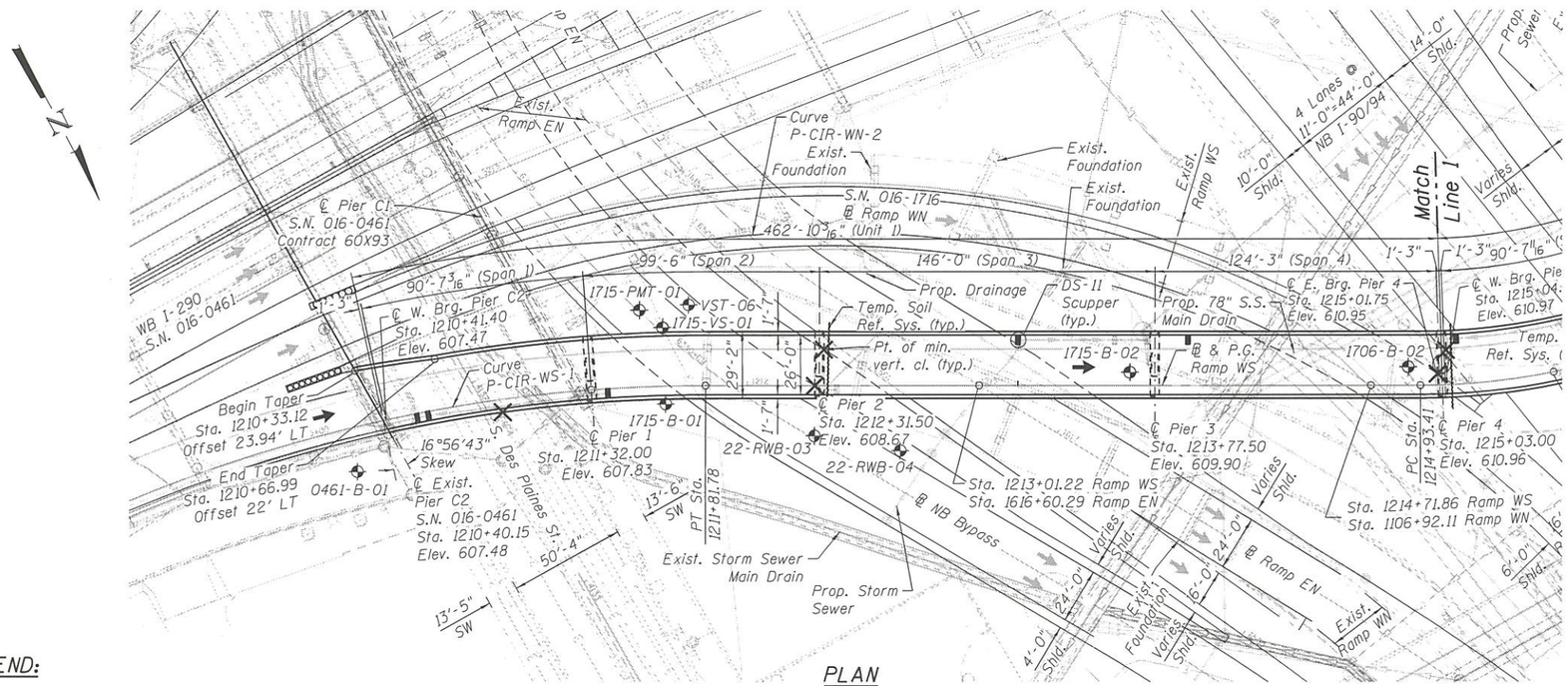

PLAN

TABLE 1

	Estimated T/Ground Elev.	Estimated T/Rock Elev.
Pier 1	588.14	485.4
Pier 2	585.34	487.6
Pier 3	578.91	488.0
Pier 4	575.45	481.5
Pier 5	574.88	483.2
Pier 6	582.79	483.2
Pier 7	590.43	480.9
Pier 8	594.59	484.5
Pier 9	581.77	486.5
Pier 10	583.24	489.4
Pier 11	583.36	490.5
Pier 12	579.24	491.1
Pier 13	576.01	489.2
Pier 14	589.26	488.8
Pier 15	588.81	492.1
Pier 16	587.16	493.0
S. Abut	585.83	493.0

DS-11 SCUPPER LOCATION

Station	Offset
1210+60	RT
1210+65	RT-SAG
1211+39	RT
1213+18	LT
1213+93	LT
1215+10	LT
1215+96	LT
1219+10	LT
1220+49	LT-SAG
1220+54	LT
1221+86	LT
1221+91	LT
1223+03	RT
1223+37	RT
1223+53	RT
1224+52	RT
1226+79	RT
1228+29	RT
1229+45	RT
1229+50	RT

NOTES:

1. All structural steel shall be metalized (thermal spraying).
2. Span lengths are measured along ℄ & P.G.L. Ramp WS.
3. All substructures are oriented 90° to ℄ Ramp WS unless noted otherwise.
4. All shafts shall be rock socketed. Depth and dia. of rock socket to be determined during final design.

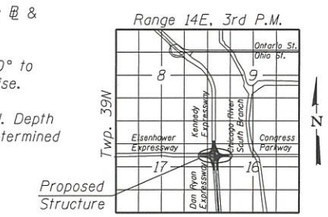

LOCATION SKETCH

LEGEND:

Combined Sewer
Electric — E —
Fiber Optic — FO —
Storm Sewer
Water Line — W —
Gas Line — G —
Fire Hydrant
Light Pole
Point of Min. Vert. Clear. ×
Soil Boring Location

HIGHWAY CLASSIFICATION

	Ramp WS	SB I-90/94	NB I-90/94	EB I-290	WB I-290	Ramp WN	Ramp SE	Ramp NW	Ramp EN	Ramp ES	NB Bypass	S. Des Plaines St.	FAU Rte. 1429 (Harrison St.)
Functional Class	Interstate	Interstate	Interstate	Interstate	Interstate	Interstate	Interstate	Interstate	Interstate	Interstate	Interstate	Principal Arter.	Urban Collector
ADT (2012)	7,200	100,100	96,700	32,500	29,700	7,200	4,600	32,500	26,600	43,900	NA	5,490	16,800
ADT (2040)	8,000	98,000	81,000	33,000	31,000	9,000	5,000	36,000	31,000	43,000	17,000	N/A	17,000
ADTT (2012)	114	11,351	11,217	380	460	204	123	2,483	1,032	4,386	NA	220	336
ADTT (2040)	127	11,113	9,396	386	480	255	134	2,750	1,203	4,296	378	N/A	340
DHV (2040)	710	6,340	4,780	2,610	2,130	790	440	2,790	1,910	2,060	1,680	N/A	1,700
Design Speed	25 m.p.h.	60 m.p.h.	60 m.p.h.	50 m.p.h.	45 m.p.h.	30 m.p.h.	25 m.p.h.	35 m.p.h.	30 m.p.h.	40 m.p.h.	30 m.p.h.	30 m.p.h.	25 m.p.h.
Posted Speed	25 m.p.h.	45 m.p.h.	45 m.p.h.	45 m.p.h.	45 m.p.h.	30 m.p.h.	25 m.p.h.	35 m.p.h.	30 m.p.h.	40 m.p.h.	NA	30 m.p.h.	25 m.p.h.
Traffic Type	One-Way												Two-Way
Directional Distribution	100:0												50:50

GENERAL PLAN & ELEVATION - 1
RAMP WS OVER I-90/94/290
F.A.I. RTE. 90/94/290
SECTION 2014-013R&B-R
COOK COUNTY
STATION 1216+37.21
STRUCTURE NO. 016-1715

016-1715-CIRCLE100-SHT-ACM-ST-TSL-001

AECOM

USER NAME = bhatta	DESIGNED - JXH	REVISED	
	CHECKED - ATB	REVISED	
PLOT SCALE = N.T.S.	DRAWN - GF	REVISED	
PLOT DATE = 1/24/2018	CHECKED - 06/16/2017	REVISED	

STATE OF ILLINOIS
DEPARTMENT OF TRANSPORTATION

STRUCTURE NO. 016-1715
SHEET NO. 1 OF 7 SHEETS

F.A.I. RTE.	SECTION	COUNTY	TOTAL SHEETS	SHEET NO.
90/94/290	2014-013R&B-R	COOK		
		CONTRACT NO. 60X93		
		ILLINOIS FED. AID PROJECT		

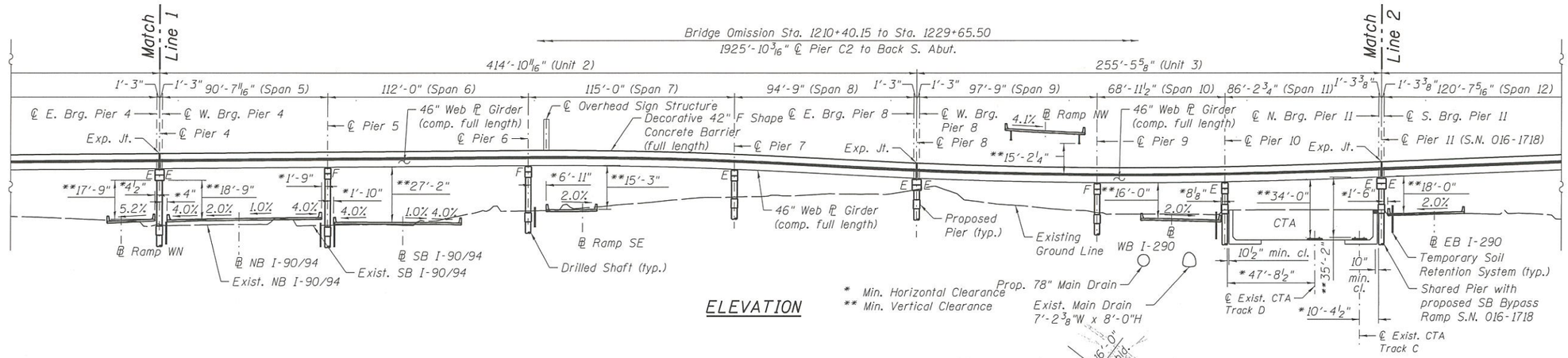

ELEVATION

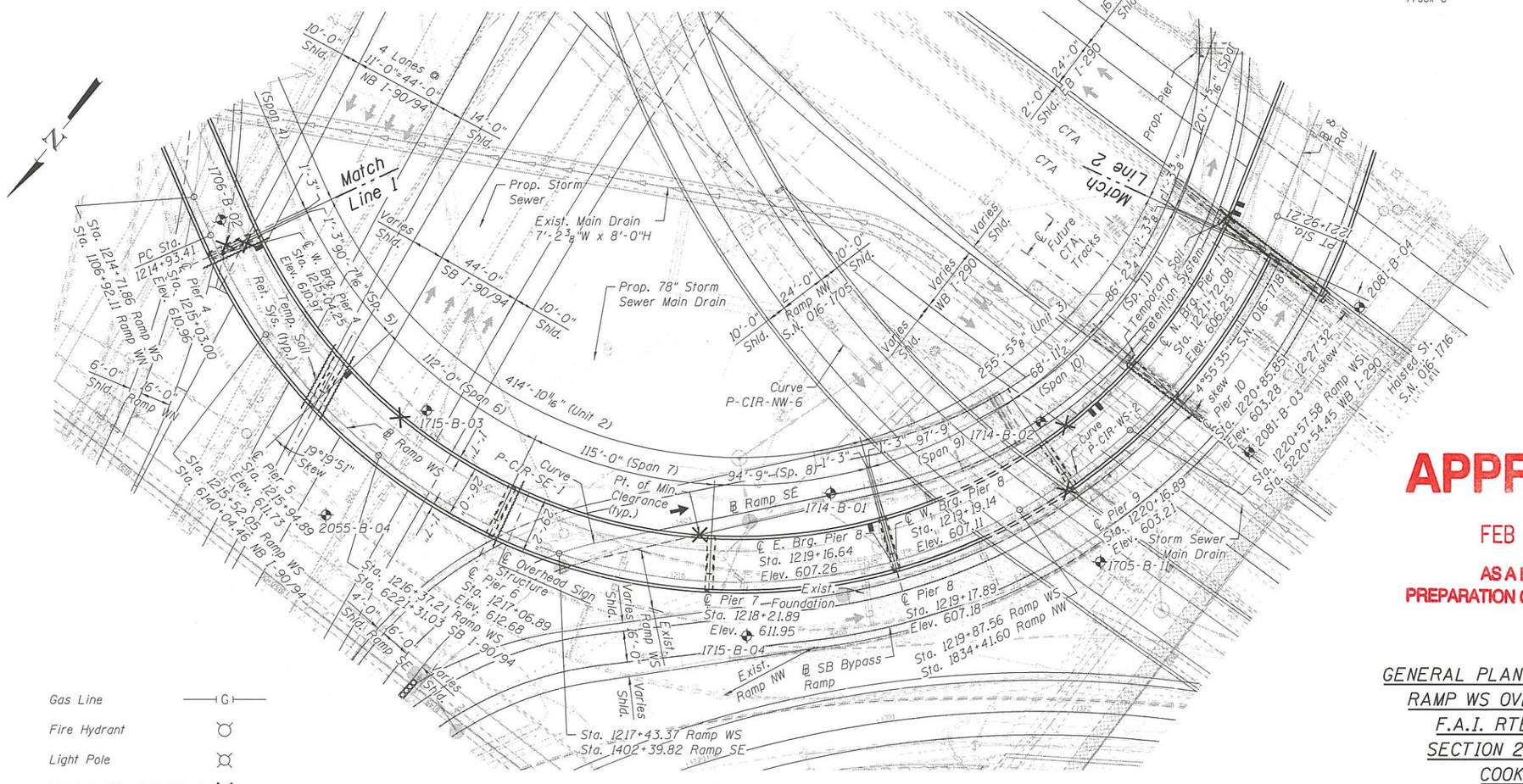

PLAN

APPROVED

FEB 01 2018

AS A BASIS FOR PREPARATION OF DETAILED PLANS

LEGEND:

Combined Sewer		Gas Line	—G—
Electric	—E—	Fire Hydrant	
Fiber Optic	—FO—	Light Pole	
Storm Sewer		Point of Min. Vert. Clear.	X
Water Line	—W—	Soil Boring Location	

GENERAL PLAN & ELEVATION - 2
RAMP WS OVER I-90/94/290
F.A.I. RTE. 90/94/290
SECTION 2014-013R&B-R
COOK COUNTY
STATION 1216+37.21
STRUCTURE NO. 016-1715

AECOM

USER NAME = bhatta	DESIGNED - JXH	REVISED	
	CHECKED - ATB	REVISED	
PLOT SCALE = N.T.S.	DRAWN - GF	REVISED	
PLOT DATE = 1/24/2018	CHECKED - 06/16/2017	REVISED	

STATE OF ILLINOIS
DEPARTMENT OF TRANSPORTATION

STRUCTURE NO. 016-1715
SHEET NO. 2 OF 7 SHEETS

F.A.I. RTE.	SECTION	COUNTY	TOTAL SHEETS	SHEET NO.
90/94/290	2014-013R&B-R	COOK		
		CONTRACT NO. 60X93		
		ILLINOIS FED. AID PROJECT		

016-1715-CIRCLE100-SHT-ACM-ST-TSL-002

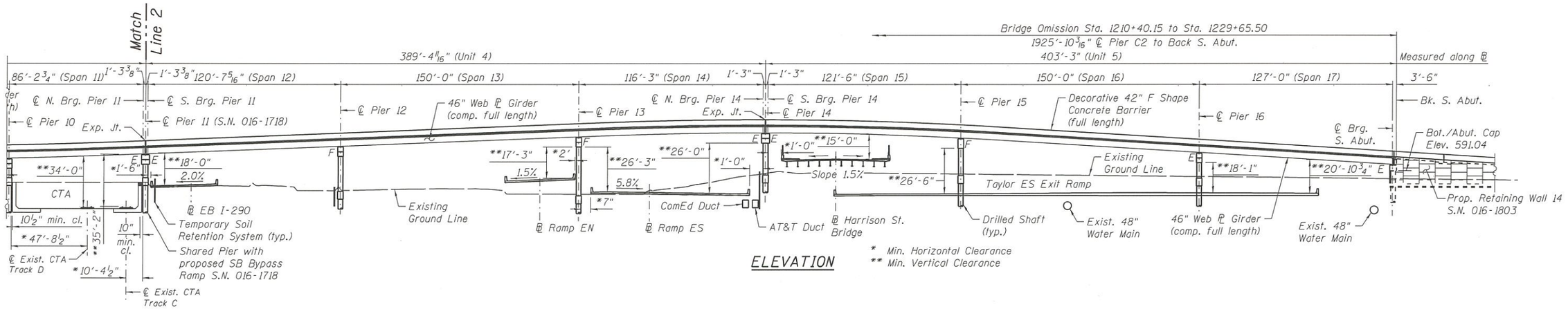

ELEVATION

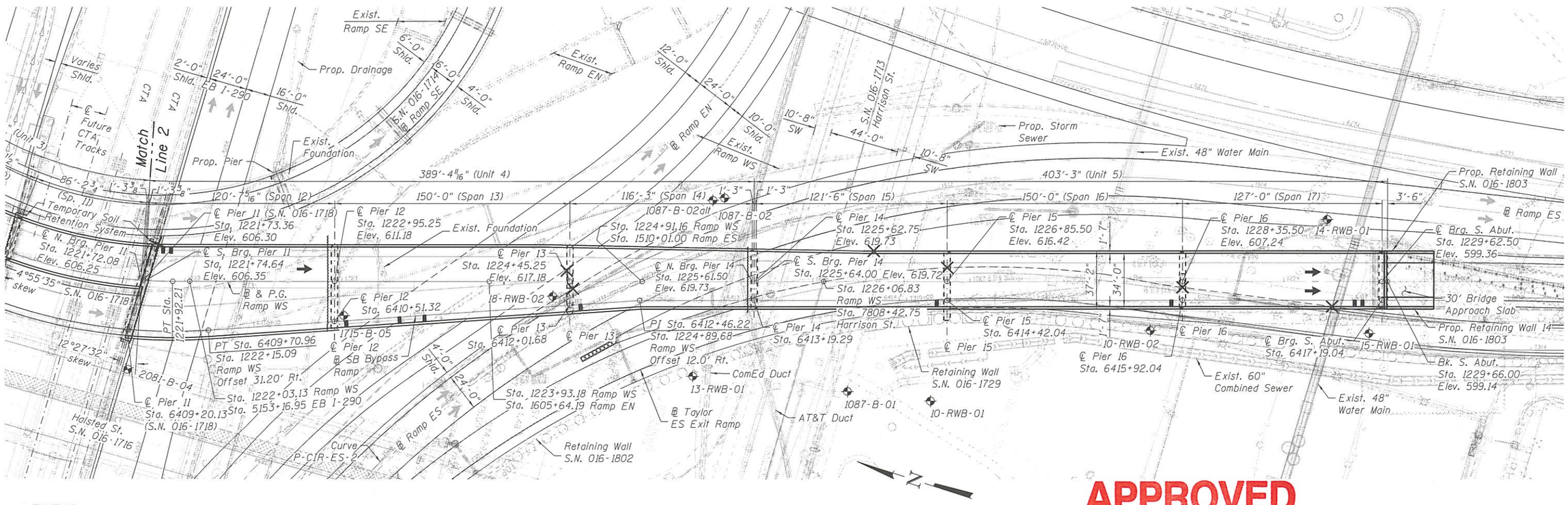

PLAN

LEGEND:

Combined Sewer		Gas Line	—G—
Electric	—E—	Fire Hydrant	
Fiber Optic	—FO—	Light Pole	
Storm Sewer		Point of Min. Vert. Clear.	×
Water Line	—W—	Soil Boring Location	

APPROVED

FEB 01 2018

AS A BASIS FOR PREPARATION OF DETAILED PLANS

GENERAL PLAN & ELEVATION - 3
RAMP WS OVER I-90/94/290
F.A.I. RTE. 90/94/290
SECTION 2014-013R&B-R
COOK COUNTY
STATION 1216+37.21
STRUCTURE NO. 016-1715

AECOM

USER NAME = bhatta	DESIGNED - JXH	REVISED	
	CHECKED - ATB	REVISED	
PLOT SCALE = N.T.S.	DRAWN - GF	REVISED	
PLOT DATE = 1/24/2018	CHECKED - 06/16/2017	REVISED	

STATE OF ILLINOIS
DEPARTMENT OF TRANSPORTATION

STRUCTURE NO. 016-1715
SHEET NO. 3 OF 7 SHEETS

F.A.I. RTE.	SECTION	COUNTY	TOTAL SHEETS	SHEET NO.
90/94/290	2014-013R&B-R	COOK		
		CONTRACT NO. 60X93		
		ILLINOIS FED. AID PROJECT		

016-1715-CIRCLE100-SHT-ACM-ST-TSL-003

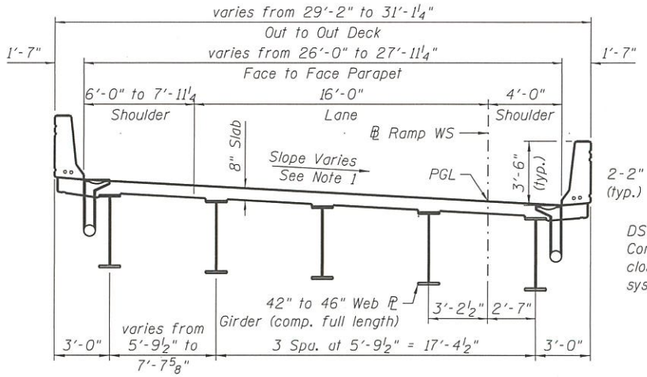

CROSS SECTION - UNIT 1

(Looking Upstation)
(Dimensions are measured radially along ℄)

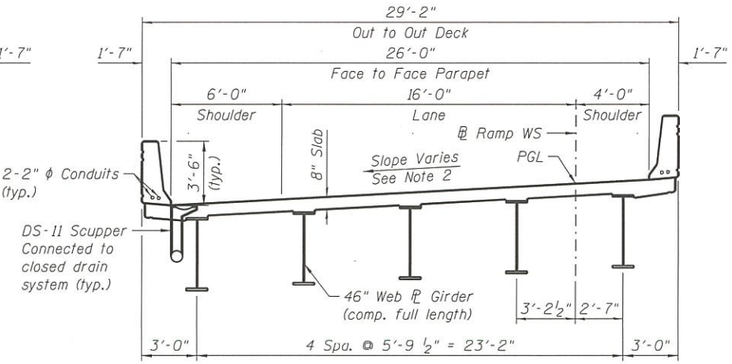

CROSS SECTION - UNITS 2 & 3

(Looking Upstation)
(Dimensions are measured radially along ℄)

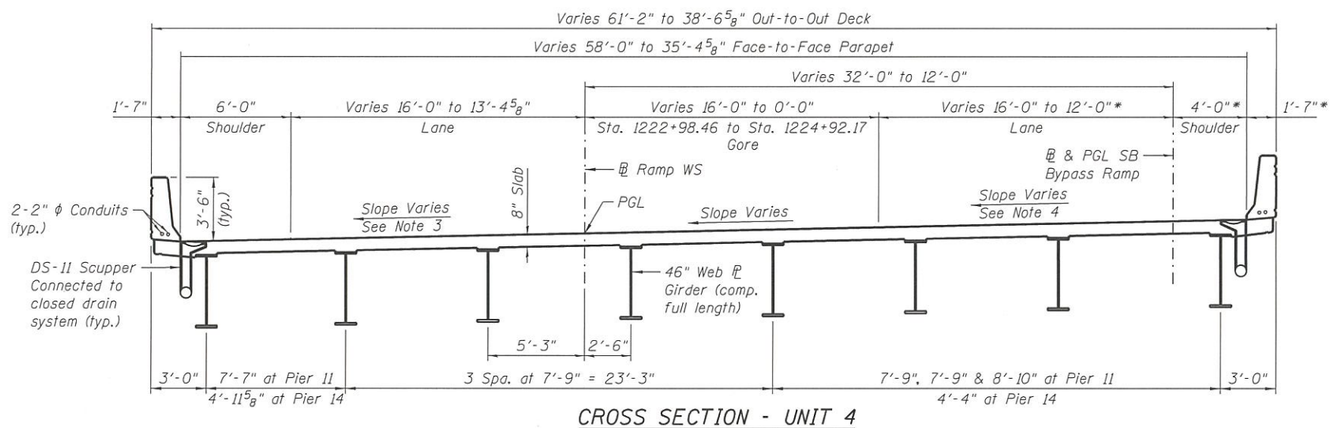

CROSS SECTION - UNIT 4

(Looking Upstation)
(Dimensions are measured perpendicular to ℄ Ramp WS U.N.O.)
*Dimensions are measured perpendicular to ℄ SB Bypass Ramp

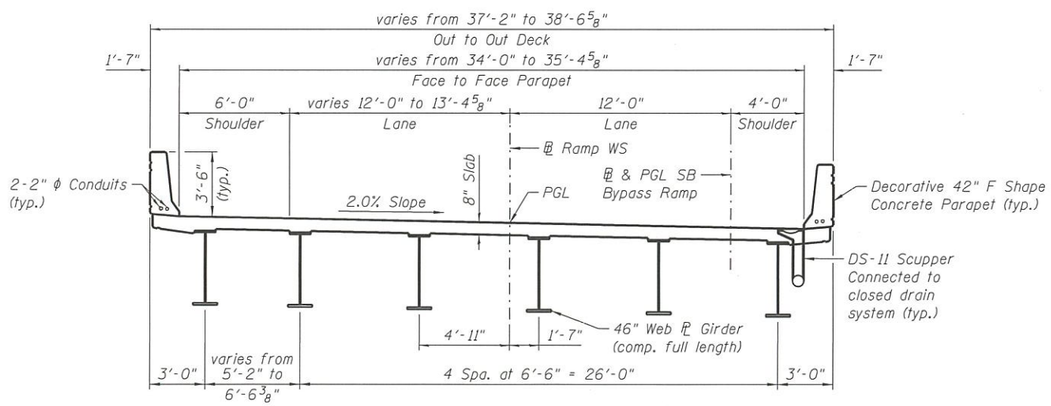

CROSS SECTION - UNIT 5

(Looking Upstation)

CROSS SLOPE NOTES:

1. (Direction of slope referenced from left edge of pavement)
   Slope transition (-5.20% to 2.00%) Sta. 1211+37.05 to Sta. 1213+23.05;
   Constant slope (2.00%) Sta. 1213+23.05 to Sta. 1214+62.51;
   Slope transition (2.00% to 5.00%) Sta. 1214+62.51 to Sta. 1215+31.51.

2. (Direction of slope referenced from left edge of pavement)
   Slope transition (2.00% to 5.00%) Sta. 1214+62.51 to Sta. 1215+31.51;
   Full S.E. (5.00%) Sta. 1215+31.51 to Sta. 1221+54.11;
   Slope transition (5.00% to -2.00%) Sta. 1221+54.11 to Sta. 1223+14.11.

3. (Direction of slope referenced from left edge of pavement)
   Slope transition (5.00% to -2.00%) Sta. 1221+54.11 to Sta. 1223+14.11;
   Constant slope (-2.00%) Sta. 1223+14.11 to Sta. 1225+62.75.

4. (Direction of slope referenced from right edge of pavement. All stations listed below are along the baseline of SB Bypass Ramp)
   Full S.E. (-5.00%) Sta. 6409+19.15 to Sta. 6409+32.86.
   Slope transition (-5.00% 2.00%) Sta. 6409+32.86 to Sta. 6410+92.86.
   Constant slope (2.00%) Sta. 6410+92.86 to Sta. 6413+19.29.

APPROVED
FEB 01 2018
AS A BASIS FOR PREPARATION OF DETAILED PLANS

RAMP WS OVER I-90/94/290
F.A.I. RTE. 90/94/290
SECTION 2014-013R&B-R
COOK COUNTY
STATION 1216+37.21
STRUCTURE NO. 016-1715

016-1715-CIRCLE100-SHT-ACM-S-TSL-004

AECOM	USER NAME = bhatta	DESIGNED - JXH	REVISED	STATE OF ILLINOIS DEPARTMENT OF TRANSPORTATION
		CHECKED - ATB	REVISED	
	PLOT SCALE = N.T.S.	DRAWN - GF	REVISED	
	PLOT DATE = 1/24/2018	CHECKED - 06/16/2017	REVISED	

STRUCTURE NO. 016-1715
SHEET NO. 4 OF 7 SHEETS

F.A.I. RTE.	SECTION	COUNTY	TOTAL SHEETS	SHEET NO.
90/94/290	2014-013R&B-R	COOK		
		CONTRACT NO. 60X93		
		ILLINOIS FED. AID PROJECT		

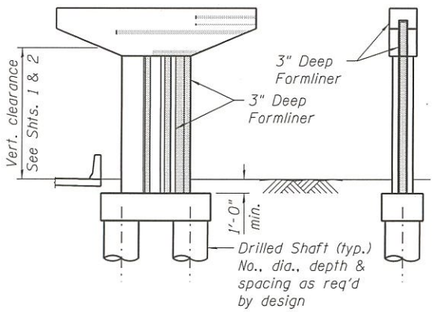

PIER 1 THRU 9 SKETCH

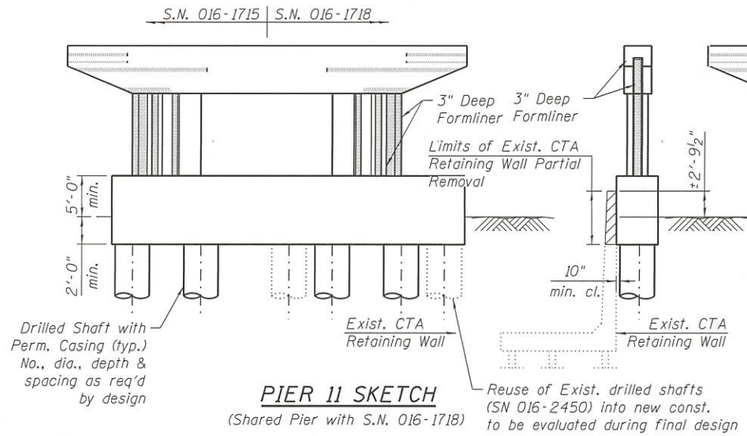

PIER 11 SKETCH
(Shared Pier with S.N. 016-1718)

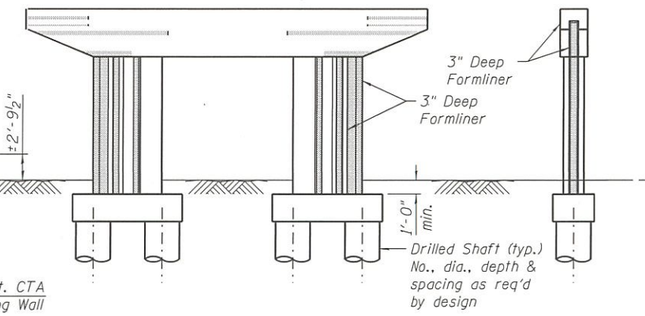

PIER 12 SKETCH

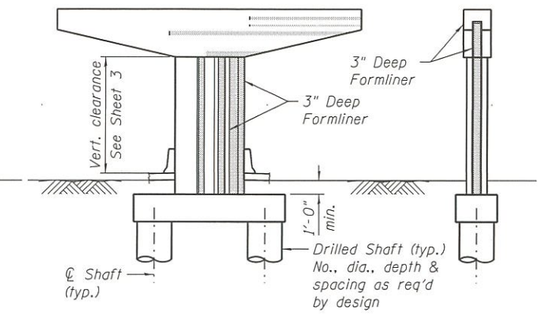

PIER 13 SKETCH

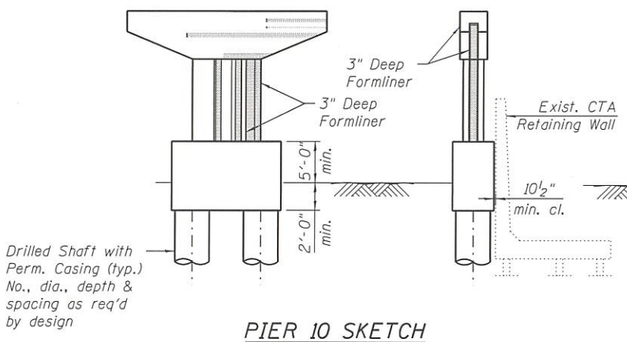

PIER 10 SKETCH

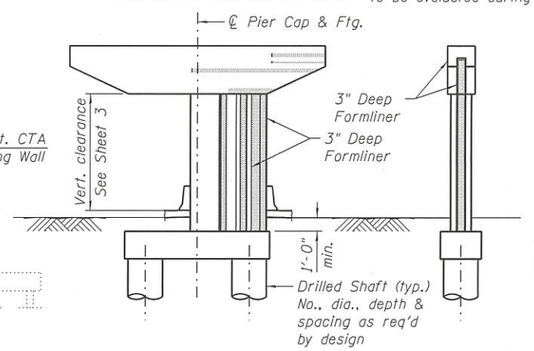

PIER 14 SKETCH

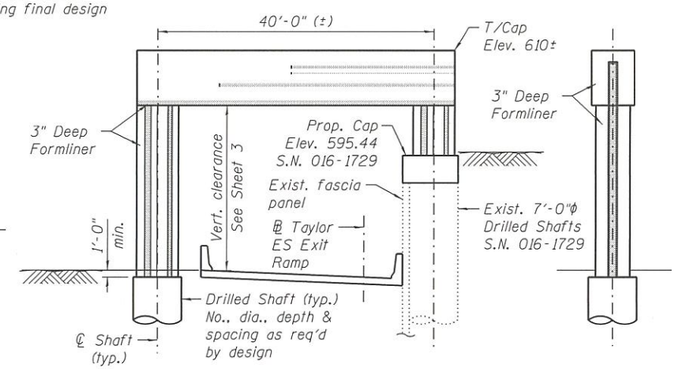

PIER 15 SKETCH
(Looking Upstation)

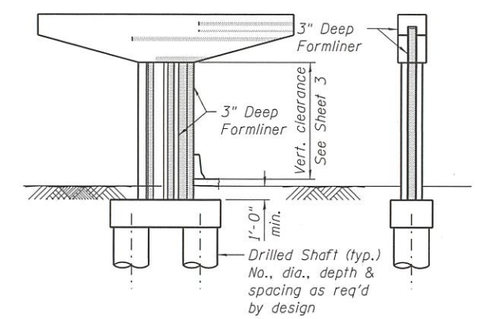

PIER 16 SKETCH

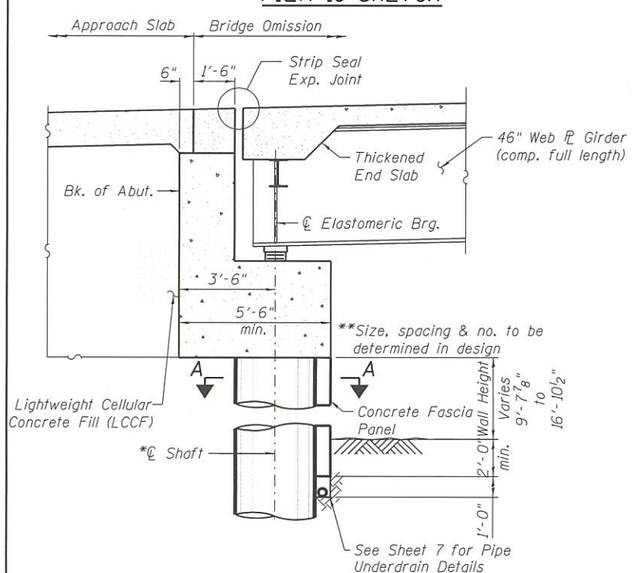

SECTION THRU ABUTMENT
(Horiz. Dims. @ Rt. L's to ℄ Brg.)
See Sheet 7 for Section A-A

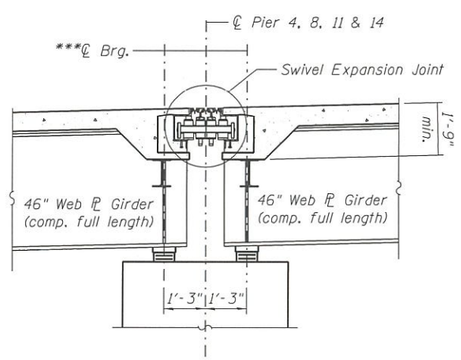

SECTION THRU EXP. PIER
(Horiz. Dims. @ Rt. L's to ℄ Pier)

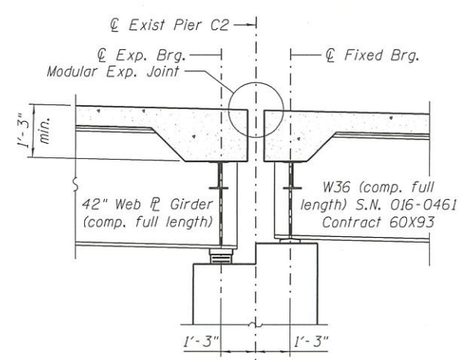

SECTION THRU PIER C2
(Horiz. Dims. @ Rt. L's to ℄ Pier)

APPROVED

FEB 01 2018

AS A BASIS FOR
PREPARATION OF DETAILED PLANS

STRUCTURE DETAILS
RAMP WS OVER I-90/94/290
F.A.I. RTE. 90/94/290
SECTION 2014-013R&B-R
COOK COUNTY
STATION 1216+37.21
STRUCTURE NO. 016-1715

016-1715-CIRCLE100-SHT-ACM-ST-TSL-005

AECOM	USER NAME = bhatta	DESIGNED - JXH	REVISED	STATE OF ILLINOIS DEPARTMENT OF TRANSPORTATION	STRUCTURE NO. 016-1715	F.A.I. RTE.	SECTION	COUNTY
		CHECKED - ATB	REVISED			90/94/290	2014-013R&B-R	COOK
	PLOT SCALE = N.T.S.	DRAWN - GF	REVISED		SHEET NO. 5 OF 7 SHEETS			CONTRACT NO. 60X93
	PLOT DATE = 1/24/2018	CHECKED - 06/16/2017	REVISED					ILLINOIS FED. AID PROJECT

TOTAL SHEETS | SHEET NO.

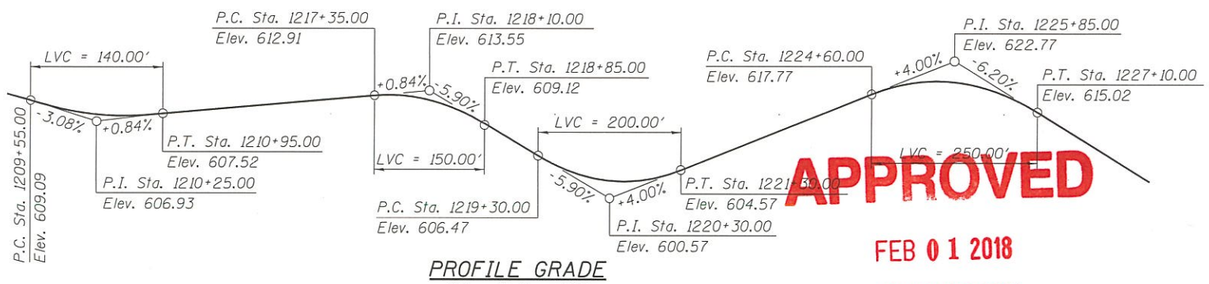

PROFILE GRADE
(along ℄ Ramp WS)

APPROVED
FEB 0 1 2018
AS A BASIS FOR
PREPARATION OF DETAILED PLANS

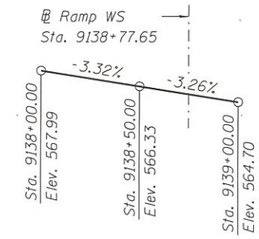

PROFILE GRADE
(along ℄ CTA Track C)

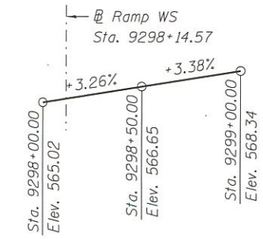

PROFILE GRADE
(along ℄ CTA Track D)

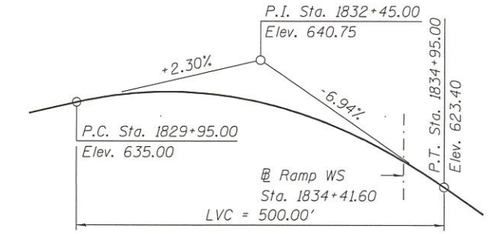

PROFILE GRADE
(along ℄ Ramp NW)

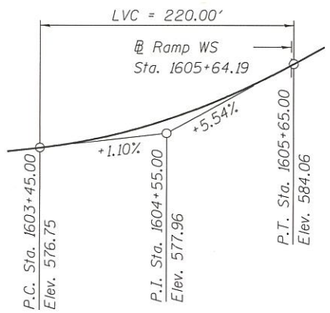

PROFILE GRADE
(along ℄ Ramp EN)

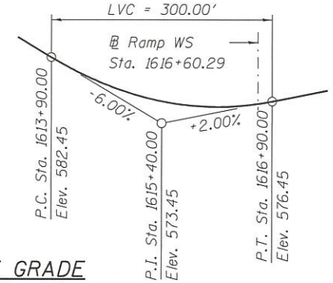

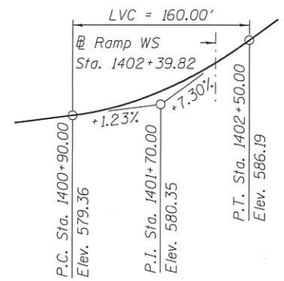

PROFILE GRADE
(along ℄ Ramp SE)

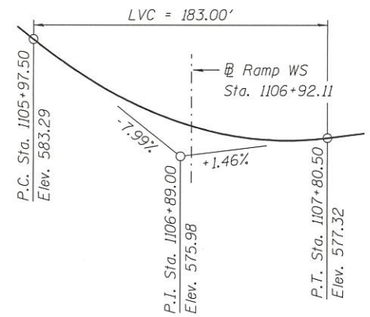

PROFILE GRADE
(along ℄ Ramp WN)

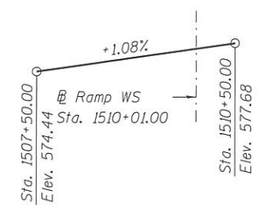

PROFILE GRADE
(along ℄ Ramp ES)

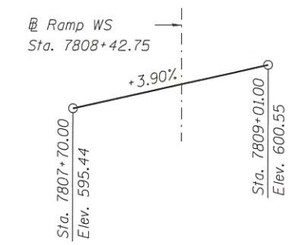

PROFILE GRADE
(along ℄ Harrison Street)

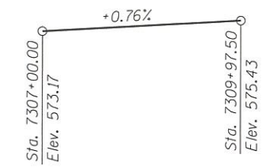

PROFILE GRADE
(along ℄ Taylor ES Exit Ramp)

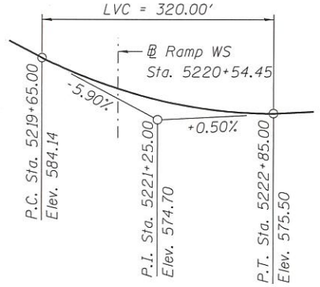

PROFILE GRADE
(along ℄ WB I-290)

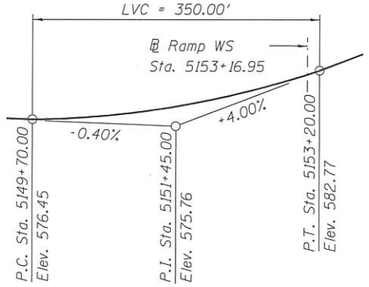

PROFILE GRADE
(along ℄ EB I-290)

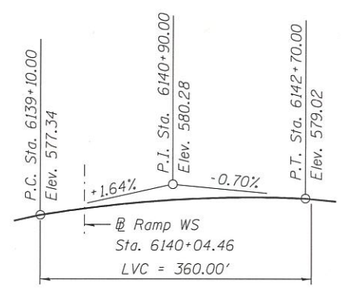

PROFILE GRADE
(along ℄ NB I-90/94)

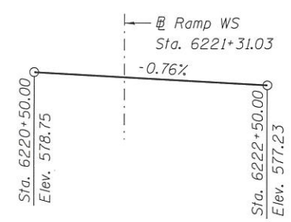

PROFILE GRADE
(along ℄ SB I-90/94)

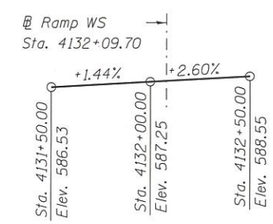

PROFILE GRADE
(along ℄ Des Plaines St.)

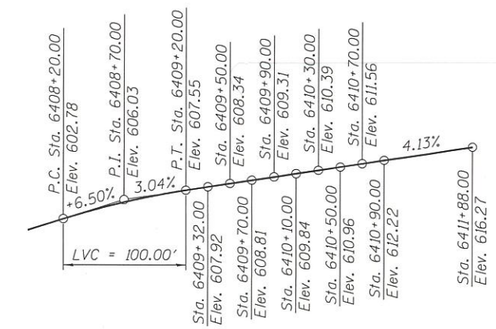

PROFILE GRADE
(Along ℄ SB Bypass Ramp)

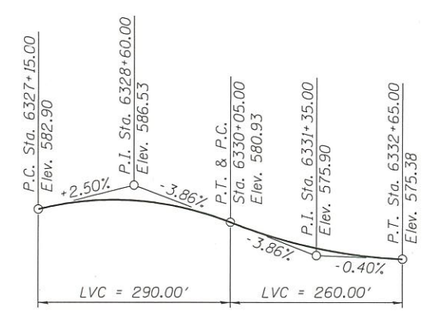

PROFILE GRADE
(along ℄ NB Bypass)

CURVE DATA

(Ramp WS)
Curve: P-CIR-WS-1
PI Sta. = 1210+36.88
Δ = 26° 00' 07" (Rt)
D = 8° 48' 53"
R = 650.00'
T = 150.08'
L = 294.98'
E = 17.10'
e = 5.20%
T.R. = 52'
S.E. Run = 134'
P.C. Sta. = 1208+86.80
P.T. Sta. = 1211+81.78
DS = 35

Curve: P-CIR-WS-2
PI Sta. = 1222+12.72
Δ = 135° 15' 55" (Lt)
D = 19° 21' 24"
R = 296.00'
T = 719.31'
L = 698.80'
E = 481.83'
e = 5.00%
T.R. = 46'
S.E. Run = 114'
P.C. Sta. = 1214+93.41
P.T. Sta. = 1221+92.21
DS = 25

CURVE DATA

(Ramp WN)
Curve: P-CIR-WN-2
PI Sta. = 1105+88.67
Δ = 69° 00' 44" (RT)
D = 12° 43' 57"
R = 450.00'
T = 309.35'
L = 542.02'
E = 96.07'
e = 5.20%
T.R. = NA
S.E. Run = 46'
P.C. Sta. = 1102+79.32
P.T. Sta. = 1108+21.34
DS = 30

CURVE DATA

(Ramp SE)
Curve: P-CIR-SE-1
PI Sta. = 1401+94.82
Δ = 45° 11' 30" (RT)
D = 30° 58' 14"
R = 185.00'
T = 76.99'
L = 145.92'
E = 15.38'
e = 6.00%
T.R. = NA
S.E. Run = 91
P.C. Sta. = 1401+17.83
P.T. Sta. = 1402+63.75
DS = 25

CURVE DATA

(Ramp NW)
Curve: P-CIR-NW-6
PI Sta. = 1831+44.30
Δ = 88° 30' 25" (LT)
D = 10° 36' 37"
R = 540.00'
T = 526.11'
L = 834.16'
E = 213.92'
e = 5.40%
T.R. = 39'
S.E. Run = 105'
P.C. Sta. = 1826+18.11
P.T. Sta. = 1834+52.27
DS = 35

CURVE DATA

(Ramp ES)
Curve: P-CIR-ES-2
PI Sta. = 1510+49.08
Δ = 63° 26' 03" (RT)
D = 8° 37' 44"
R = 664.00'
T = 410.37'
L = 735.14'
E = 116.58'
e = 5.80%
T.R. = 41'
S.E. Run = 120'
P.C. Sta. = 1506+38.71
P.T. Sta. = 1513+73.85
DS = 40

CURVE DATA

(Taylor ES Exit Ramp)
Curve: P-TAY-ES-4
PI STA. = 7309+26.26
Δ = 44° 07' 39" (RT)
D = 10° 13' 53"
R = 560.00'
T = 226.98'
L = 431.30'
E = 44.25'
e = 5.80%
T.R. = NA
S.E. RUN = 150'
P.C. STA. = 7306+99.28
P.T. STA. = 7311+30.57
DS = 35

PROFILES & CURVE DATA
RAMP WS OVER I-90/94/290
F.A.I. RTE. 90/94/290
SECTION 2014-013R&B-R
COOK COUNTY
STATION 1216+37.21
STRUCTURE NO. 016-1715

016-1715-CIRCLE100-SHT-ACM-ST-TSL-006

AECOM

USER NAME = bhatta	DESIGNED - JXH	REVISED	
	CHECKED - ATB	REVISED	
PLOT SCALE = N.T.S.	DRAWN - GF	REVISED	
PLOT DATE = 1/24/2018	CHECKED - 06/16/2017	REVISED	

STATE OF ILLINOIS
DEPARTMENT OF TRANSPORTATION

STRUCTURE NO. 016-1715
SHEET NO. 6 OF 7 SHEETS

F.A.I. RTE.	SECTION	COUNTY	TOTAL SHEETS	SHEET NO.
90/94/290	2014-013R&B-R	COOK		
		CONTRACT NO. 60X93		
		ILLINOIS FED. AID PROJECT		

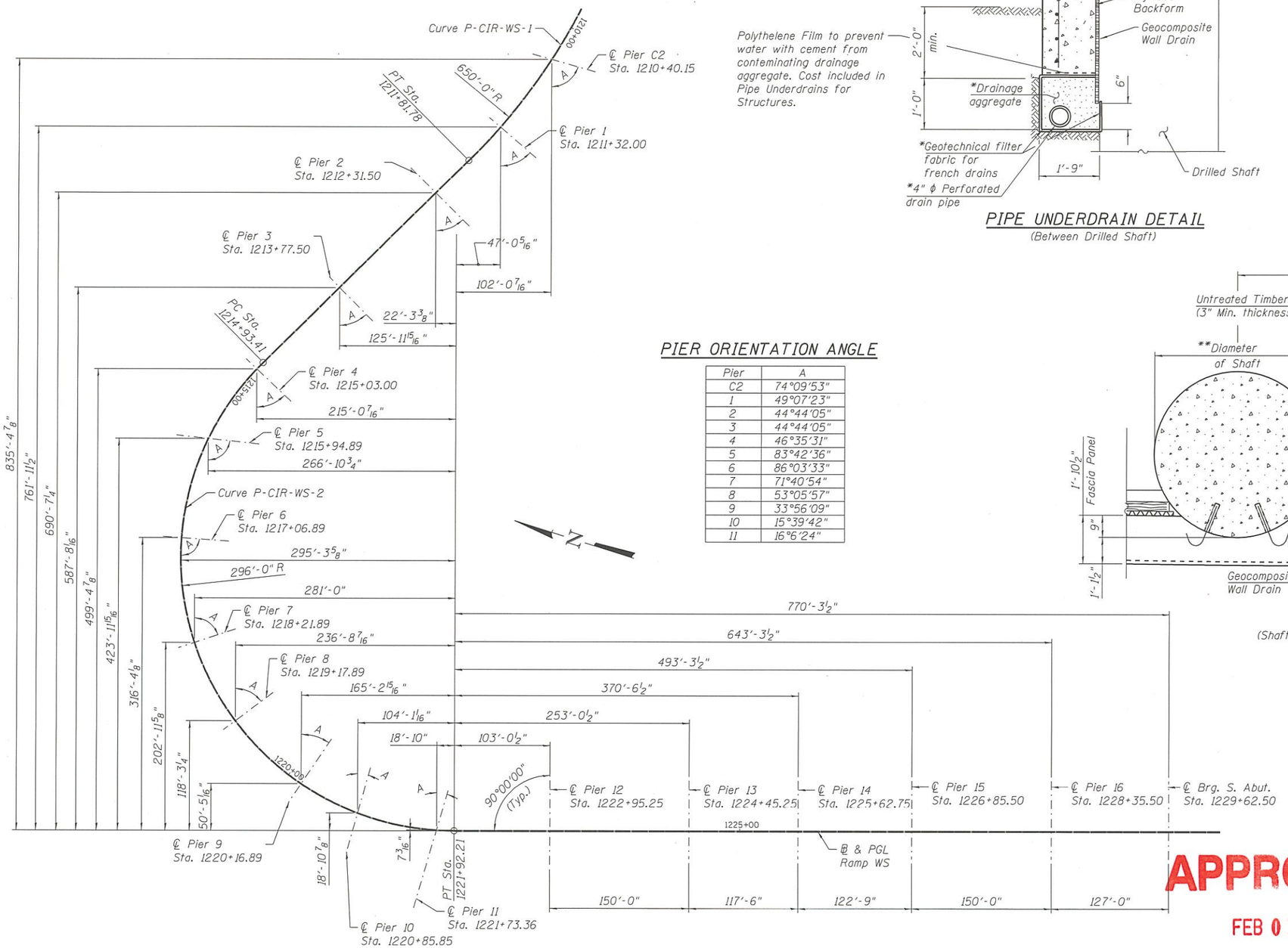

OFFSET SKETCH

PIER ORIENTATION ANGLE

Pier	A
C2	74°09'53"
1	49°07'23"
2	44°44'05"
3	44°44'05"
4	46°35'31"
5	83°42'36"
6	86°03'33"
7	71°40'54"
8	53°05'57"
9	33°56'09"
10	15°39'42"
11	16°6'24"

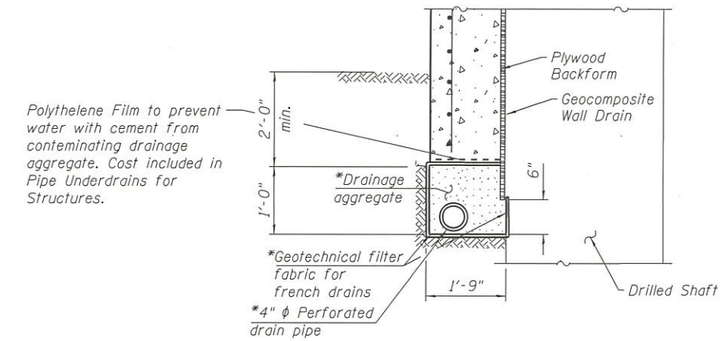

PIPE UNDERDRAIN DETAIL

(Between Drilled Shaft)

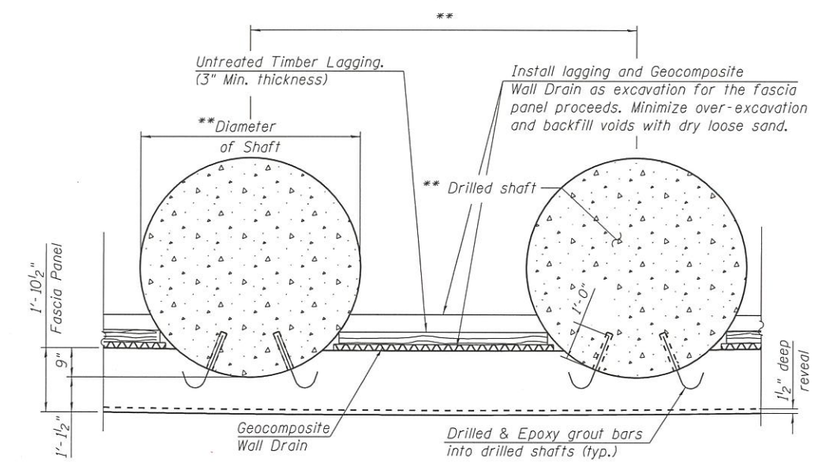

SECTION A-A

(Shaft Reinforcement not shown for clarity)

NOTES:

* Included in the cost of pipe Underdrains for Structures.

** Drilled shaft diameter, spacing, tip elevation and casing to be determined during final design.

APPROVED

FEB 01 2018

AS A BASIS FOR PREPARATION OF DETAILED PLANS

OFFSET SKETCH
RAMP WS OVER I-90/94/290
F.A.I. RTE. 90/94/290
SECTION 2014-013R&B-R
COOK COUNTY
STATION 1216+37.21
STRUCTURE NO. 016-1715

016-1715-CIRCLE100-SHT-ACM-ST-TSL-007

AECOM

USER NAME = bhatta	DESIGNED - JXH	REVISED	
	CHECKED - ATB	REVISED	
PLOT SCALE = N.T.S.	DRAWN - GF	REVISED	
PLOT DATE = 1/24/2018	CHECKED - 06/16/2017	REVISED	

STATE OF ILLINOIS
DEPARTMENT OF TRANSPORTATION

STRUCTURE NO. 016-1715
SHEET NO. 7 OF 7 SHEETS

F.A.I. RTE.	SECTION	COUNTY	TOTAL SHEETS	SHEET NO.
90/94/290	2014-013R&B-R	COOK		
		CONTRACT NO. 60X93		
		ILLINOIS FED. AID PROJECT		