Benchmark: Cut square at southeast corner of Van Buren St. and Halsted St., on northeast corner of first step of decorative pillar. Elevation 594.00.

Existing Structure: None

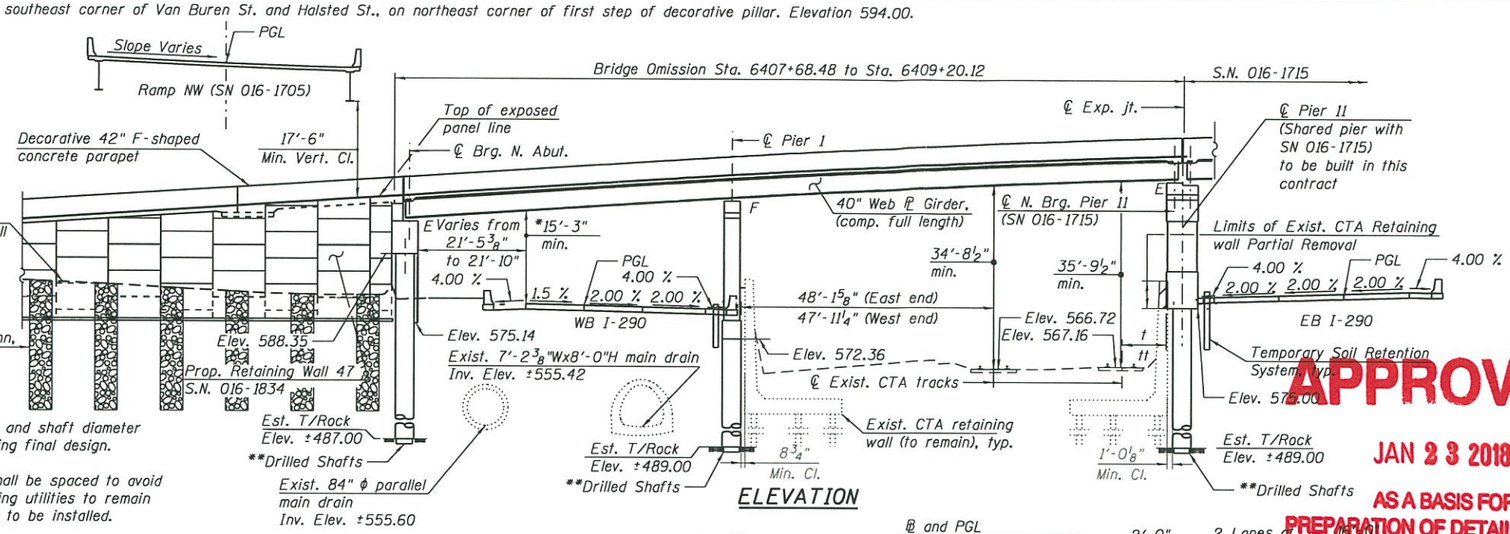

ELEVATION

* Final Min. Vert. Cl.

** Spacing, tip elevation and shaft diameter to be determined during final design.

*** Aggregate columns shall be spaced to avoid interfering with existing utilities to remain and proposed utilities to be installed.

t = 9'-3 5/8" (East end)
tt = 9'-4 7/8" (West end)

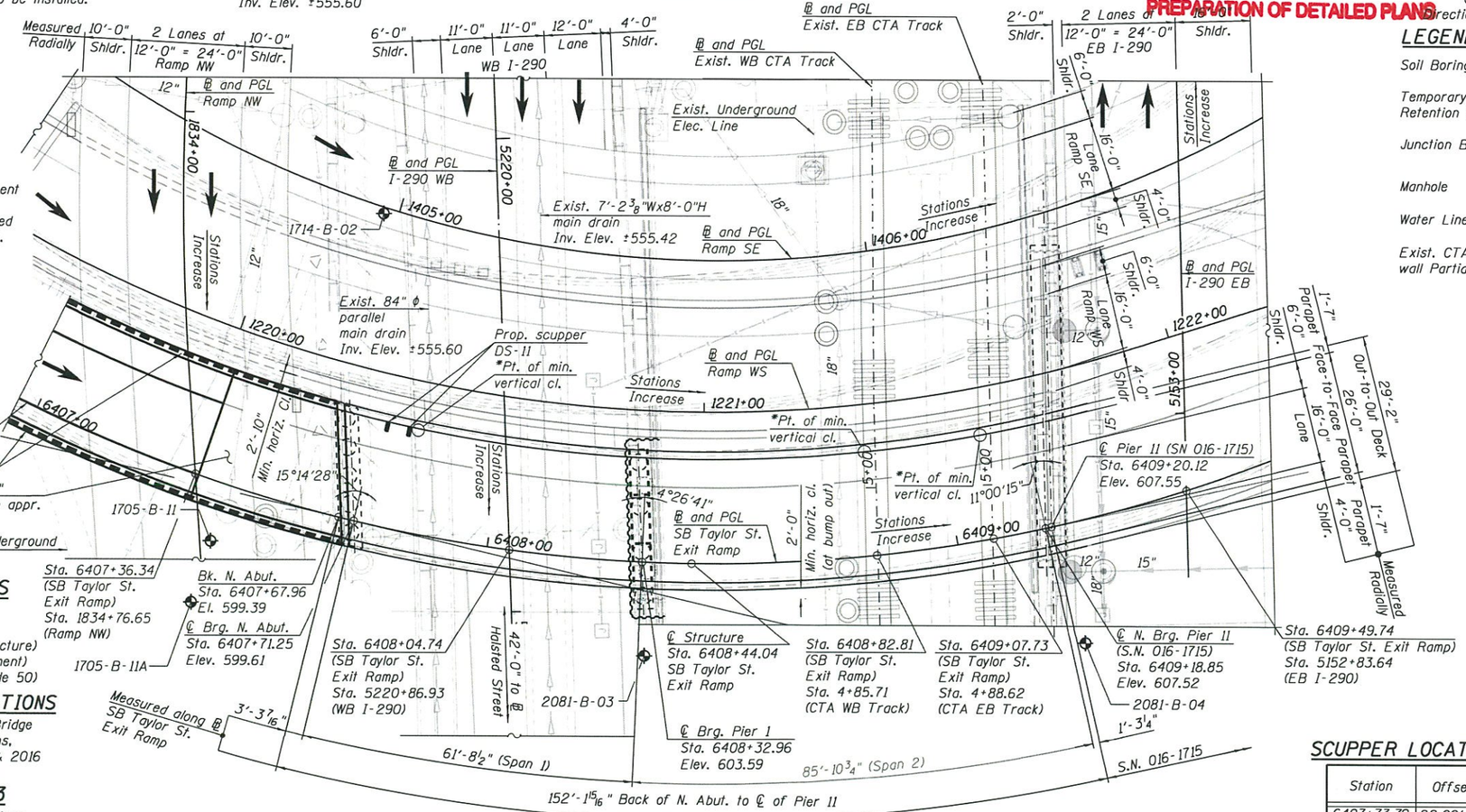

PLAN

NOTES:

1. The existing drainage manholes at the northwest corner of the prop. abutment and Ret. Wall 47 (SN 016-1834) shall be relocated to avoid conflict with prop. construction.
2. For additional Notes, see Sheet 2 of 3.

DESIGN STRESSES

FIELD UNITS

f'c = 3,500 psi
f'c = 4,000 psi (Superstructure)
fy = 60,000 psi (Reinforcement)
fy = 50,000 psi (M270 Grade 50)

DESIGN SPECIFICATIONS

2014 AASHTO LRFD Bridge Design Specifications, 7th Edition, with 2015 & 2016 Interim Revisions

LOADING HL-93

Allow 50#/sq. ft. for future wearing surface.

HIGHWAY CLASSIFICATION

Ramp SE
Functional Class: Interstate
ADT: 4,600 (2010); 5,000 (2040)
ADTT: 123 (2012); 134 (2040)
DHV: 440 (2040)
Design Speed: 25 m.p.h.
Posted Speed: 25 m.p.h.
One-Way Traffic
Directional Distribution: NA

SB Taylor St. Exit Ramp
Functional Class: Interstate
ADT: NA (2012); 8,000 (2040)
ADTT: NA (2012); 240 (2040)
DHV: 590 (2040)
Design Speed: 25 m.p.h.
Posted Speed: NA
One-Way Traffic
Directional Distribution: 100%

Ramp WS
Functional Class: Interstate
ADT: 7,200 (2012); 8,000 (2040)
ADTT: 114 (2012); 127 (2040)
DHV: 710 (2040)
Design Speed: 25 m.p.h.
Posted Speed: 25 m.p.h.
One-Way Traffic
Directional Distribution: NA

Ramp NW
Functional Class: Interstate
ADT: 32,500 (2012); 36,000 (2040)
ADTT: 2,483 (2012); 2,750 (2040)
DHV: 2,790 (2040)
Design Speed: 35 m.p.h.
Posted Speed: 35 m.p.h.
One-Way Traffic
Directional Distribution: 100%

I-290 WB at I-90/94
Functional Class: Interstate
ADT: 29,700 (2012); 31,000 (2040)
ADTT: 460 (2012); 480 (2040)
DHV: 2,130 (2040)
Design Speed: 45 m.p.h.
Posted Speed: 45 m.p.h.
One-Way Traffic
Directional Distribution: 100%

I-290 EB at I-90/94
Functional Class: Interstate
ADT: 32,500 (2012); 33,000 (2040)
ADTT: 380 (2012); 386 (2040)
DHV: 2,610 (2040)
Design Speed: 50 m.p.h.
Posted Speed: 45 m.p.h.
One-Way Traffic
Directional Distribution: 100%

APPROVED
JAN 23 2018
AS A BASIS FOR PREPARATION OF DETAILED PLANS

LEGEND:

Soil Boring
Temporary Soil Retention System
Junction Box
Manhole
Water Line — W —
Exist. CTA Retaining wall Partial Removal
Combined Sewer
Electric — E —
Fiber Optic — FO —
Exist. Storm Sewer
Prop. Storm Sewer
Telephone
Aband. Sewer

SEISMIC DATA

Seismic Performance Zone (SPZ) = 1
Design Spectral Acceleration at 1.0 sec. (S_{D1}) = 0.085g
Design Spectral Acceleration at 0.2 sec. (S_{DS}) = 0.144g
Soil Site Class = D

Range 14E, 3rd P.M.

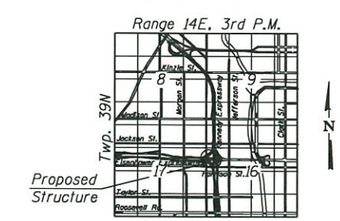

LOCATION SKETCH

SCUPPER LOCATION

Station	Offset
6407+73.79	22.00' Lt.
6407+78.79	22.00' Lt.

GENERAL PLAN AND ELEVATION
SB TAYLOR ST. EXIT RAMP
OVER F.A.I. RTE 290
(EISENHOWER EXPRESSWAY) AND CTA
F.A.I. RTE 90/94/290
SECTION 2014-013R&B-R
COOK COUNTY
STATION 6408+44.04
STRUCTURE NO. 016-1718

FILE PATH = pw:\\617479-PWINT.eeconnline.local:AECOM_DS82_NA\Documents\01 Americas\Transportation\60269938 Cercle\Phase_I\000_CAD\000_Structure\Bridge_016-1718\60X000-000-TSL-001

HBM ENGINEERING GROUP, LLC
CONSULTING & DESIGN
INSPECTION & RATING
RESEARCH & TESTING
4415 WEST HARRISON ST.
SUITE 231
HILLSIDE, IL 60162
PHONE: (708) 236-0900
FAX: (708) 236-0901

USER NAME = ahmad.isse	DESIGNED - MI, JJS	REVISED -	
	DRAWN - WM, JJS, LAB	REVISED -	
PLOT SCALE = 20.000000 ' / in.	CHECKED - MAI, MI	REVISED -	
PLOT DATE = 1/18/2018	DATE - 01/18/2018	REVISED -	

STATE OF ILLINOIS
DEPARTMENT OF TRANSPORTATION

STRUCTURE NO. 016-1718

SCALE: | SHEET 1 OF 3 SHEETS | STA. TO STA.

F.A.I. RTE.	SECTION	COUNTY	TOTAL SHEETS	SHEET NO.
90/94/290	2014-013R&B-R	COOK	3	1

CONTRACT NO. 60X93

ILLINOIS FED. AID PROJECT

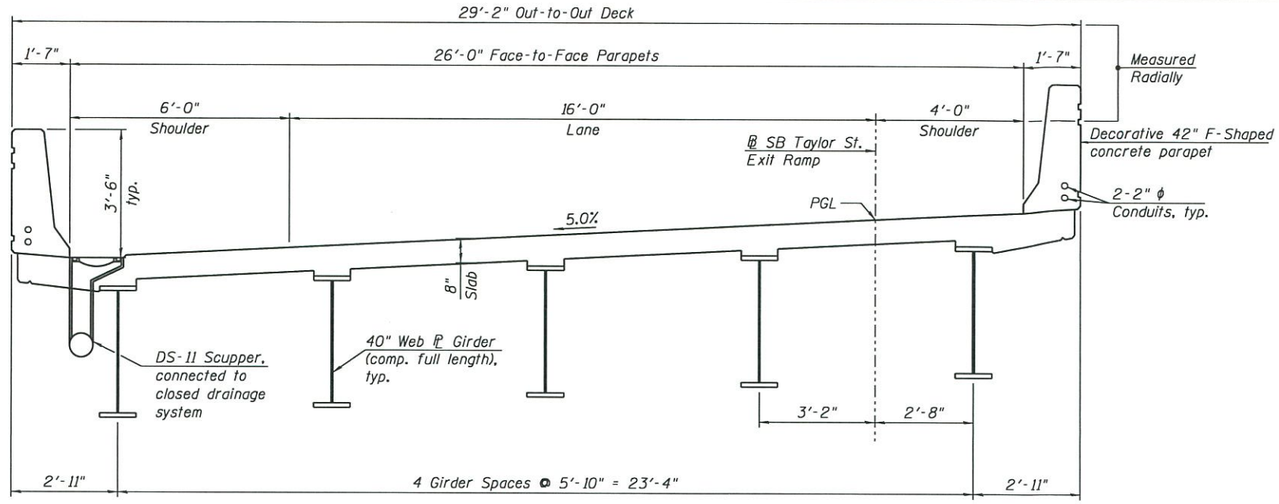

CROSS SECTION
(Looking Upstation)

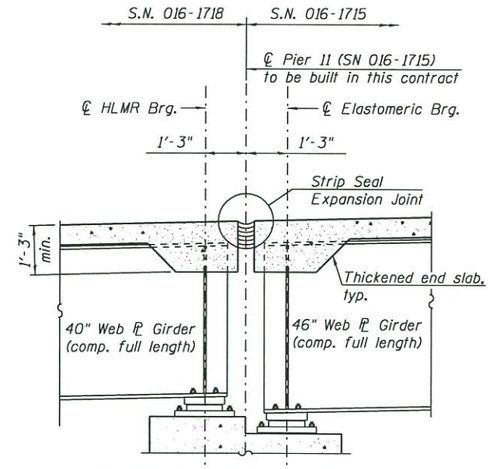

SECTION THRU EXP. PIER 11
(Horiz. Dims. at Rt. L's to ℄ Pier 11)

NOTES:

1. For Profile Grade Lines and offset sketch, see Sheet 3 of 3.
2. Drainage scupper shall be attached to a closed drainage system.
3. All structural steel shall be metalized (thermal spraying).
4. Span lengths are measured along ℙ SB Taylor St. Exit Ramp.
5. Temporary track closures may be required for construction and shall be coordinated with Chicago Transit Authority (CTA) during final design.
6. Lightweight Cellular Concrete Fill (Class III - 42pcf) shall be used for all MSE retaining wall fill.

LEGEND

Exist. CTA Retaining wall Partial Removal

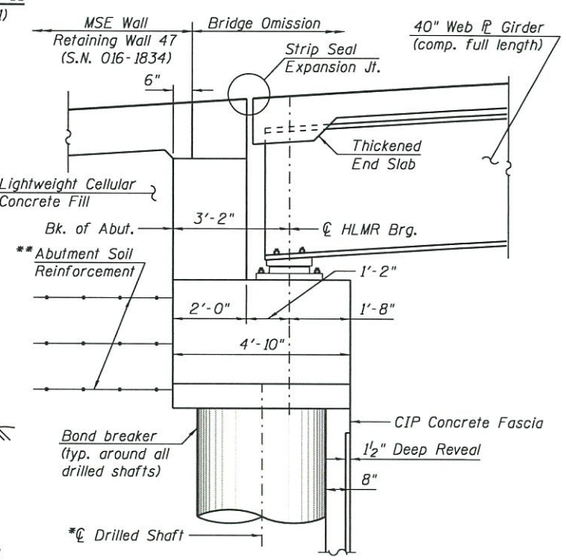

SECTION THRU WEST ABUTMENT
(Horiz. Dims. @ Rt. L's to ℄ Brg.)
*Size, spacing & no. to be determined in design
**Abutment Soil Reinforcement to resist lateral loads in lieu of drilled shafts

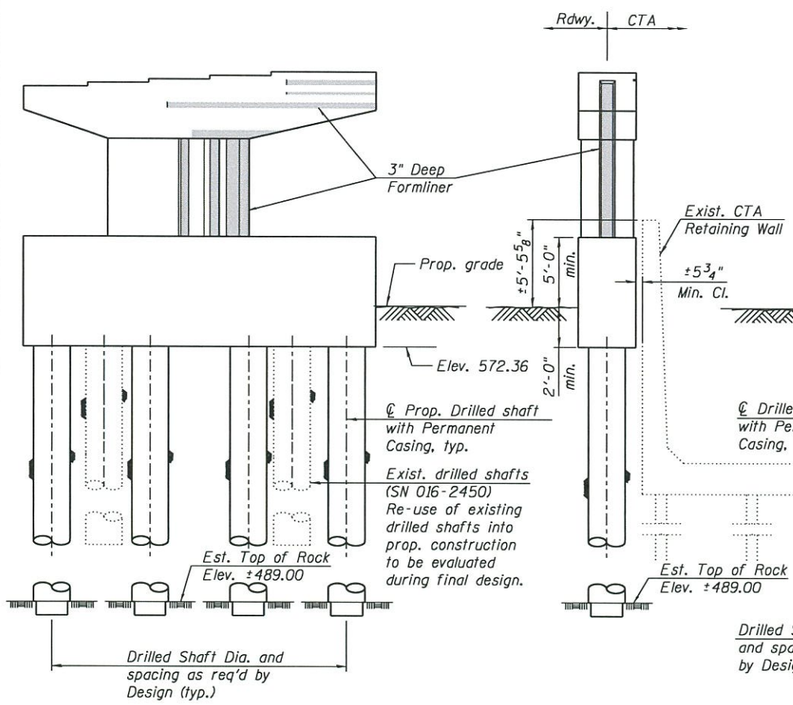

PIER 1 SKETCH

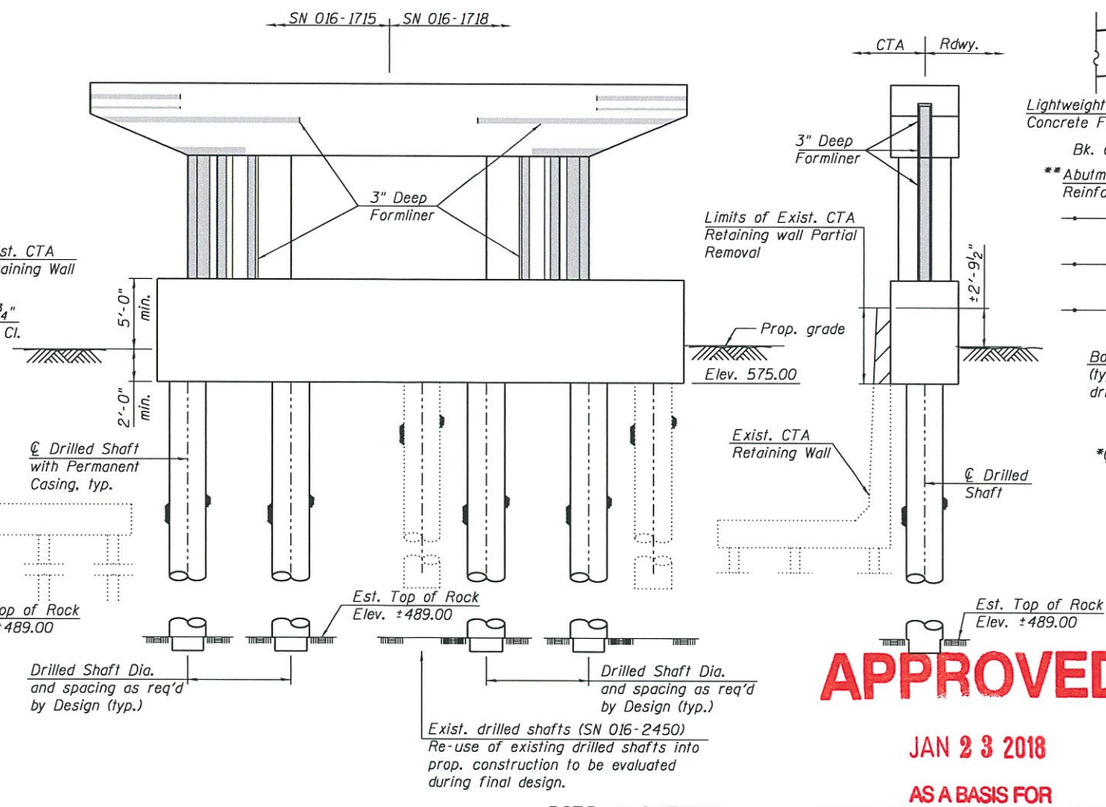

PIER 11 SKETCH
(Shared Pier with S.N. 016-1715)

APPROVED
JAN 23 2018
AS A BASIS FOR PREPARATION OF DETAILED PLANS

SECTION & DETAILS
SB TAYLOR ST. EXIT RAMP OVER F.A.I. RTE 290 (EISENHOWER EXPRESSWAY) AND CTA
F.A.I. RTE 90/94/290
SECTION 2014-013R&B-R
COOK COUNTY
STATION 6408+44.04
STRUCTURE NO. 016-1718

HBM ENGINEERING GROUP, LLC
CONSULTING & DESIGN INSPECTION & RATING RESEARCH & TESTING
4415 WEST HARRISON ST. SUITE 231 HILLSIDE, IL 60162
PHONE: (708) 236-0900
FAX: (708) 236-0901

USER NAME = ahmad.issa	DESIGNED - MI, JJS	REVISED -	
	DRAWN - WM, AI, MA	REVISED -	
PLOT SCALE = 4:0.0000 ':' / in.	CHECKED - MAI, MI	REVISED -	
PLOT DATE = 1/18/2018	DATE - 01/18/2018	REVISED -	

STATE OF ILLINOIS
DEPARTMENT OF TRANSPORTATION

STRUCTURE NO. 016-1718

SCALE: | SHEET 2 OF 3 SHEETS | STA. TO STA.

F.A.I. RTE.	SECTION	COUNTY	TOTAL SHEETS	SHEET NO.
90/94/290	2014-013R&B-R	COOK	3	2
		CONTRACT NO. 60X93		
		ILLINOIS FED. AID PROJECT		

FILE PATH = pw:\\61749-PWINT.aecomonline.local:AECOM_DS02_NA\Documents\01 Americas\Transportation\60259938 Circle\Phase 1\008 CAD\008 Structural\Bridge 016-1718\016171B-G0W00-B00-TSL-002

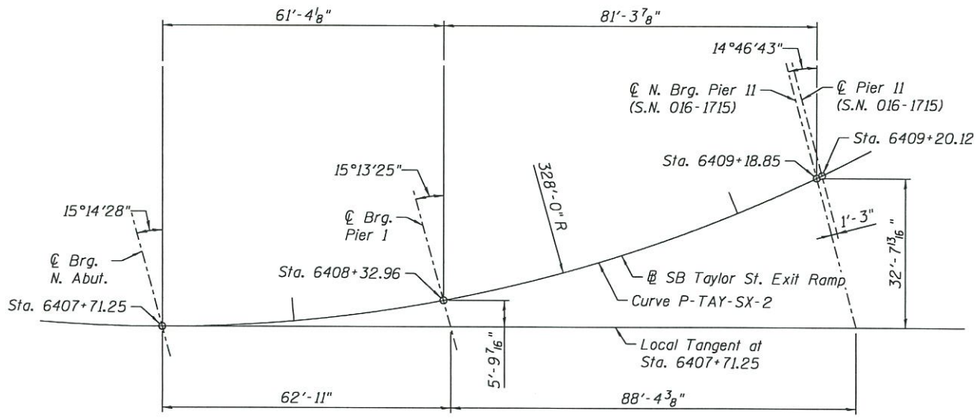

OFFSET SKETCH

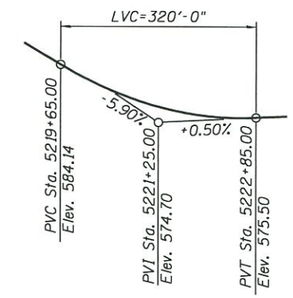

PROFILE GRADE
(Along ℄ WB Congress)

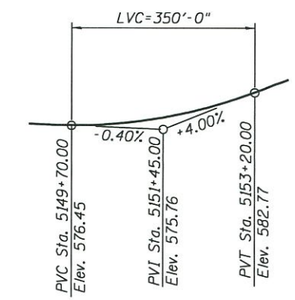

PROFILE GRADE
(Along ℄ EB Congress)

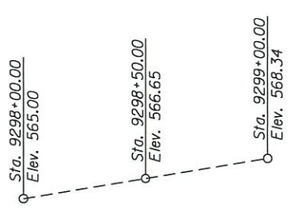

PROFILE GRADE
(Along ℄ CTA WB Track)

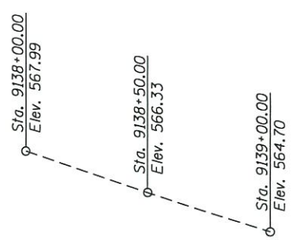

PROFILE GRADE
(Along ℄ CTA EB Track)

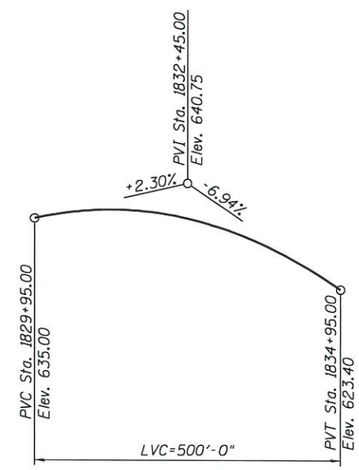

PROP. CURVE P-CIR-NW-6
PI STA. = 1831+44.30
Δ = 88° 30' 25" (LT)
D = 10° 36' 37"
R = 540.00'
T = 526.11'
L = 834.16'
E = 213.92'
e = 5.40%
T.R. = 39'
S.E. RUN = 105'
P.C. STA. = 1826+18.19
P.T. STA. = 1834+52.35
DS = 35
PS = 35

PROFILE GRADE
(Along ℄ Ramp NW)

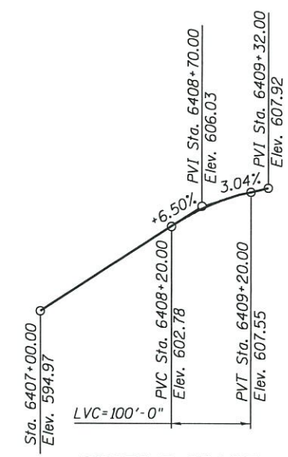

PROP. CURVE P-TAY-SX-2
PI STA. = 6408+06.27
Δ = 65° 55' 10" (LT)
D = 17° 28' 06"
R = 328.00'
T = 212.68'
L = 377.37'
E = 62.92'
e = 5.00%
T.R. = 46'
S.E. RUN = 114'
P.C. STA. = 6405+93.59
P.T. STA. = 6409+70.96
DS = 25
PS = 25

PROFILE GRADE
(Along ℄ SB Taylor St. Exit Ramp)

APPROVED
JAN 23 2018
AS A BASIS FOR
PREPARATION OF DETAILED PLANS

OFFSET SKETCH, PROFILES & CURVE DATA
SB TAYLOR ST. EXIT RAMP
OVER F.A.I. RTE 290
(EISENHOWER EXPRESSWAY) AND CTA
F.A.I. RTE. 90/94/290
SECTION 2014-013R&B-R
COOK COUNTY
STATION 6408+44.04
STRUCTURE NO. 016-1718

FILE PATH = pw:\\617479-PWINT.aecomonline.local:AECOM.DS02.MAV\Documents\01 Americas\Transportation\60269938 Circle\Phase.1\000.CAD\000.Structural\Bridge_016-1718\016171B-GDW000-000-TSL-003

HBM ENGINEERING GROUP, LLC.
CONSULTING & DESIGN
INSPECTION & RATING
RESEARCH & TESTING
4415 WEST HARRISON ST.
SUITE 231
HILLSIDE, IL 60162
PHONE: (708) 236-0900
FAX: (708) 236-0901

USER NAME = ahmad.issa	DESIGNED - MI, JJS	REVISED -	
	DRAWN - WM, AI, MA	REVISED -	
PLOT SCALE = 0:2.000000 ':' / in.	CHECKED - MAI, MI	REVISED -	
PLOT DATE = 1/18/2018	DATE - 01/18/2018	REVISED -	

STATE OF ILLINOIS
DEPARTMENT OF TRANSPORTATION

STRUCTURE NO. 016-1718

SCALE: | SHEET 3 OF 3 SHEETS | STA. | TO STA.

F.A.I. RTE.	SECTION	COUNTY	TOTAL SHEETS	SHEET NO.
90/94/290	2014-013R&B-R	COOK	3	3
		CONTRACT NO. 60X93		
		ILLINOIS FED. AID PROJECT		