Bench Mark: Cut "X" on southwest overlook of Jackson Blvd. Bridge. Elev. 597.26.

Existing Structure: Existing Retaining Wall 7 (SN 016-W807). Constructed in 2009 under F.A.P. Route 90/94, Section 202.6-2P. Cast-in-place concrete retaining wall on metal shell piles and spread footing that measures 284'-10 3/8" from Jackson Boulevard NW Wingwall north to Adams Street. Maximum height from top of wall to bottom of footing measures 22'-8 1/2". The existing retaining wall is to be removed and replaced.

Traffic on Jackson Exit Ramp will be detoured during construction.

No Salvage.

Notes:

1.) Wall offsets are measured from the ℄ of Jackson Exit Ramp to the front face of cast-in-place fascia panels.
2.) C denotes Construction Joint
3.) E denotes Expansion Joint
4.) F.F. denotes Front Face.
5.) B.F. denotes Back Face.
6.) Wall to be built along straight chords between kink points, construction joints, and expansion joints.
7.) Soldier Pile section, shaft diameter, spacing and tip elevation to be determined during final design.
8.) Proposed drainage information shown is conceptual and will be determined during final design.
9.) Soldier piles shall be spaced to avoid Existing ComEd Ductbank. Clearance requirements will be coordinated with ComEd during final design.
10.) Utilities in Exist. Parking Lot will be removed or relocated by others prior to construction.

SUGGESTED SEQUENCE OF CONSTRUCTION

1.) Install temporary soil retention system along Jackson abutment.
2.) Drill shafts and install soldier piles.
3.) Remove portion of Existing Retaining Wall 7 in front of the proposed wall and excavate to install timber lagging.
4.) Construct concrete fascia panels, cap, and parapet.

CURVE DATA

(Jackson Exit Ramp)
Prop. Curve P-JAC-SX-1
P.I. Sta. = 8283+78.27
Δ = 5° 01' 56" (LT)
D = 1° 41' 07"
R = 3,400.00'
T = 149.40'
L = 298.61'
E = 3.28'
e = 2.00%
T.R. = NA
S.E. Run = NA
P.C. Sta. = 8282+28.87
P.T. Sta. = 8285+27.48

DESIGN STRESSES

FIELD UNITS

f'c = 7,000 psi (Drilled Shafts)**
f'c = 3,500 psi (All other concrete)
fy = 60,000 psi (Reinforcement)

SOLDIER PILES

fy = 50,000 psi (AASHTO M270 Gr. 50)

** Final concrete strength will be determined during final design

HIGHWAY CLASSIFICATION

Jackson Exit Ramp
Functional Class: Interstate
ADT: 2,900 (2012); 4,000 (2040)
ADTT: 0 (2012); 0 (2040)
DHV: 410 (2040)
Design Speed: 30 m.p.h.
Posted Speed: 30 m.p.h.
One-Way Traffic
Directional Distribution: 100%

Ramp SW
Functional Class: Interstate
ADT: 24,500 (2012); 23,000 (2040)
ADTT: 907 (2012); 851 (2040)
DHV: 1,720 (2040)
Design Speed: 35 m.p.h.
Posted Speed: 35 m.p.h.
One-Way Traffic
Directional Distribution: 100%

DESIGN SPECIFICATIONS

2017 AASHTO LRFD Bridge Design Specifications 8th Edition

WALL DEFLECTION CRITERIA:

Maximum total lateral wall deflection at top of drilled shaft wall: 2 3/8 inch.
Maximum total lateral wall deflection at top of drilled soldier pile wall: 1 inch.

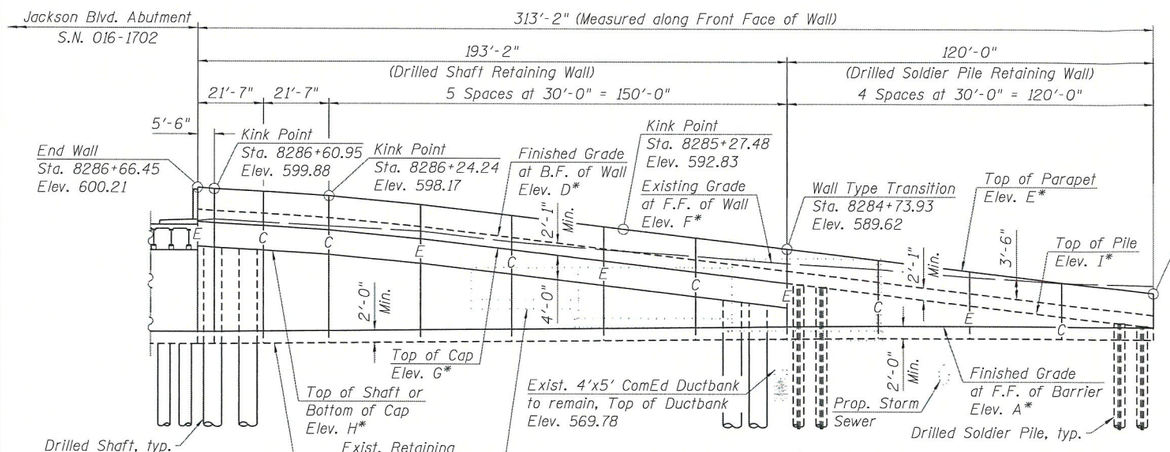

* For elevations, see Table 1 on Sheet 3 of 3.

ELEVATION

(Looking West at F.F. of Wall. Proposed Concrete Barrier along Ramp SW not shown for clarity.)

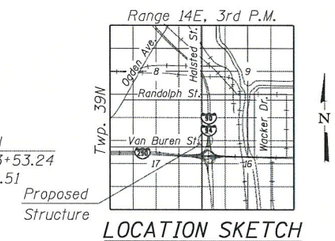

LOCATION SKETCH

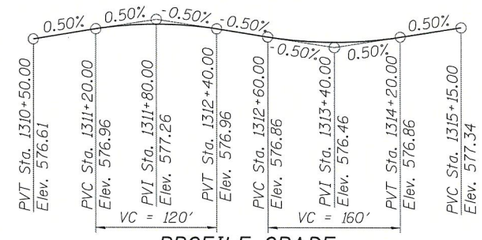

PROFILE GRADE

(℄ Ramp SW)

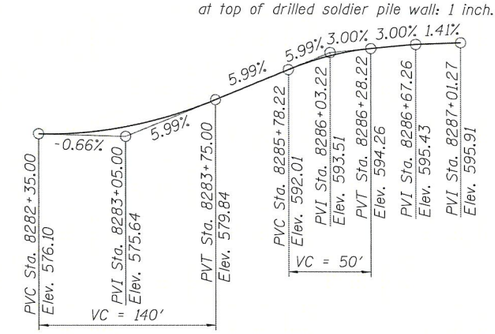

PROFILE GRADE

(℄ Jackson Exit Ramp)

APPROVED
MAY 22 2019
AS A BASIS FOR PREPARATION OF DETAILED PLANS

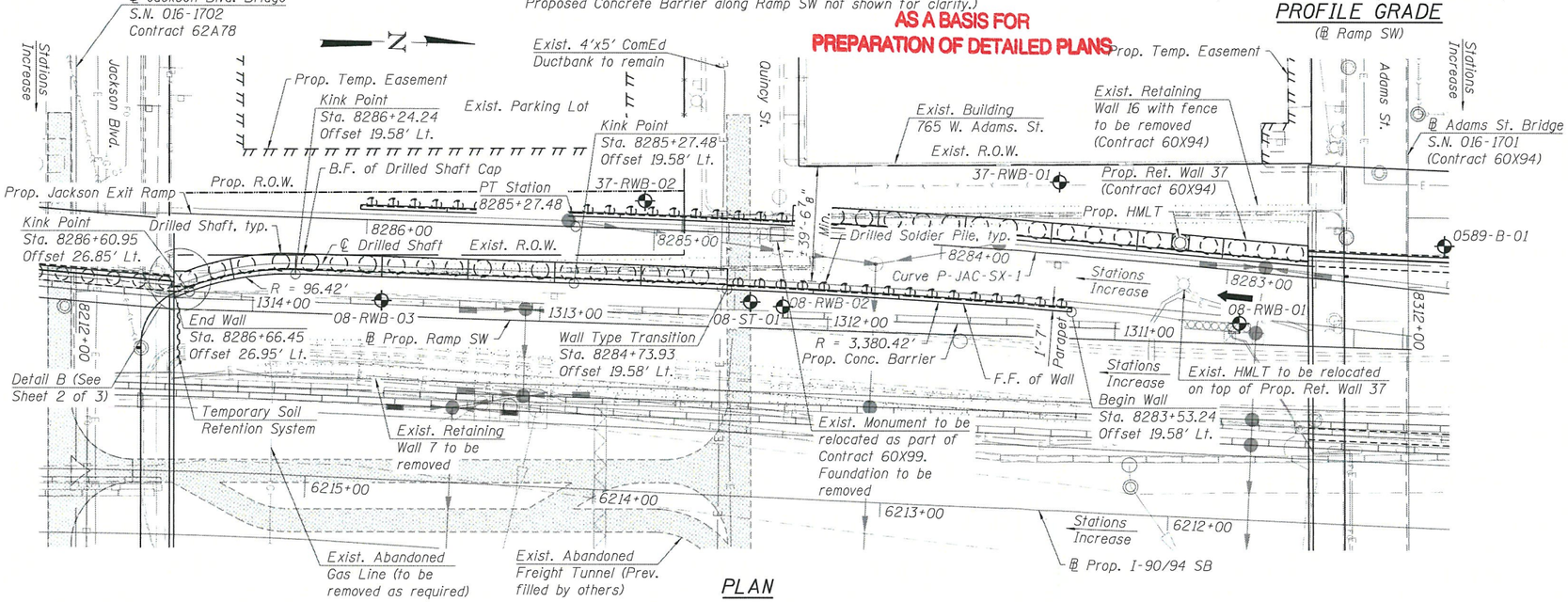

PLAN

LEGEND:

Ex. Chain Link Fence	— X — X —	Soil Boring	
Combined Sewer		Existing Catch Basin	
Electric	—E—	Proposed Catch Basin	
Ex. Storm Sewer		Existing Manhole	
Prop. Storm Sewer		Proposed Manhole	
Ex. ITS Cable		Proposed Inlet	
Ex. Gas Line	—G—		
Ex. Fiber Optic	—FO—		

GENERAL PLAN
RETAINING WALL 8 ALONG JACKSON EXIT RAMP
F.A.I. RTE. 90/94 (KENNEDY EXPRESSWAY)
SECTION 2015-020B
COOK COUNTY
STATION 8283+53.24 TO STATION 8286+66.45
STRUCTURE NO. 016-1727

TranSystems

USER NAME = wjcolletti	DESIGNED - JNP	REVISED -	
	CHECKED - WJC	REVISED -	
PLOT SCALE = 48.0000 ' / in.	DRAWN - JNP	REVISED -	
PLOT DATE = 4/29/2019	CHECKED - WJC	REVISED -	

STATE OF ILLINOIS
DEPARTMENT OF TRANSPORTATION

SHEET NO. 1 OF 3 SHEETS

F.A.I. RTE.	SECTION	COUNTY	TOTAL SHEETS	SHEET NO.
90/94	2015-020B	COOK	3	1
		CONTRACT NO. 62A78		
		ILLINOIS FED. AID PROJECT		

10:32:27 AM - pw:\\AECOM-NA-AWS.aecomonline.local:AECOM_DS02_NA\Documents\01 Americas\Transportation\60269938 Circle\Phase_II\000_CAD\008_Structural\Structure_016-1727\TSL\Sheets\016I727-62A78-SHT-TSL-001

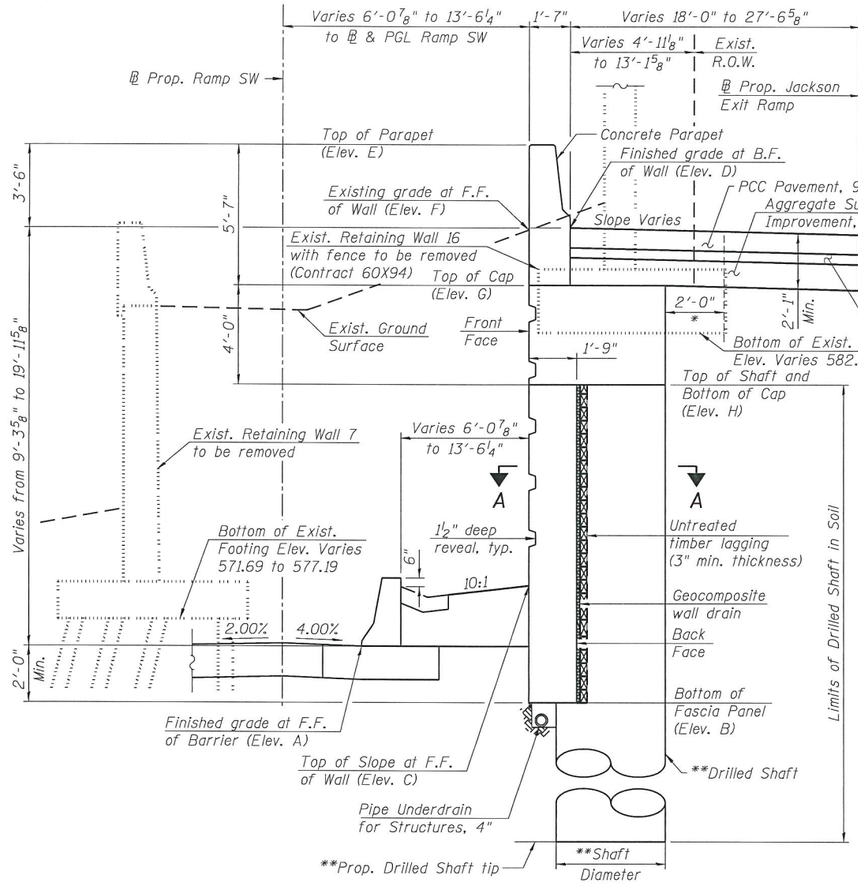

TYPICAL CROSS SECTION - DRILLED SHAFT WALL

(Looking Upstation)
(Sta. 8284+73.93 to Sta. 8286+66.45)

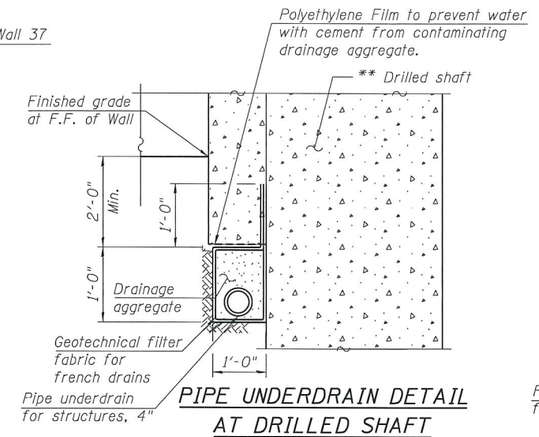

PIPE UNDERDRAIN DETAIL AT DRILLED SHAFT

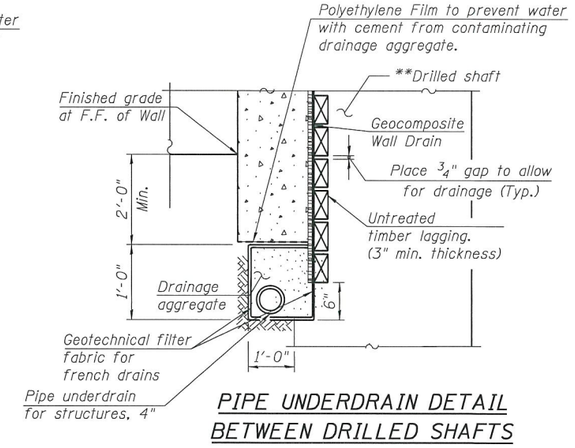

PIPE UNDERDRAIN DETAIL BETWEEN DRILLED SHAFTS

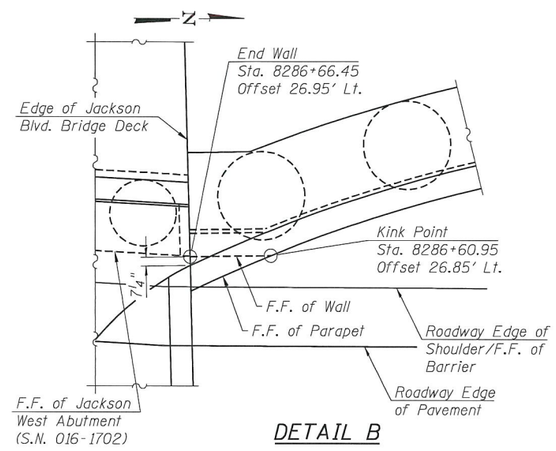

DETAIL B

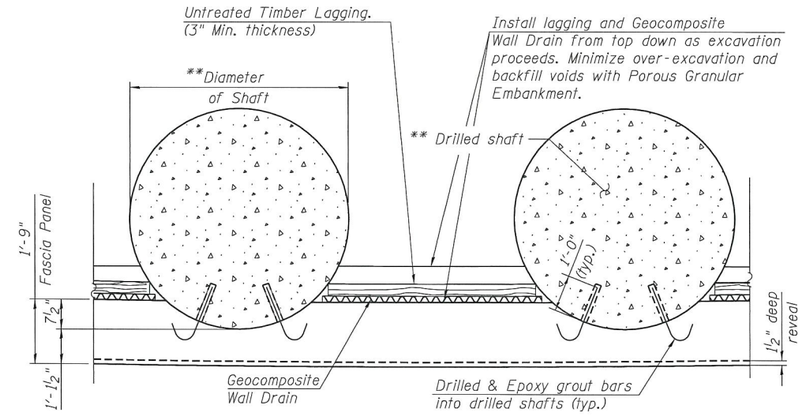

SECTION A-A

(Shaft Reinforcement not shown for clarity)

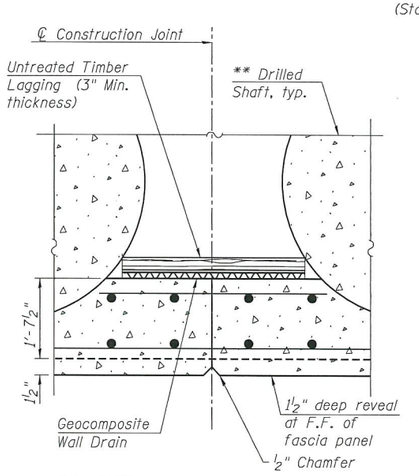

CONSTRUCTION JOINT DETAILS

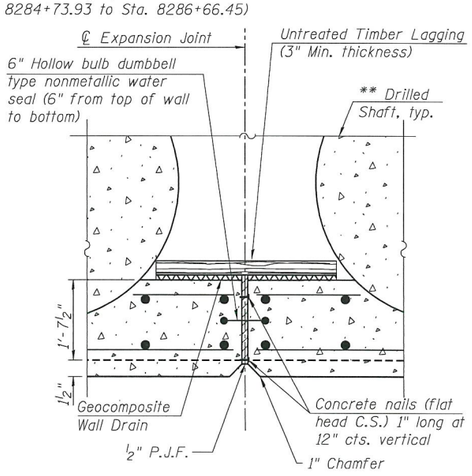

EXPANSION JOINT DETAILS

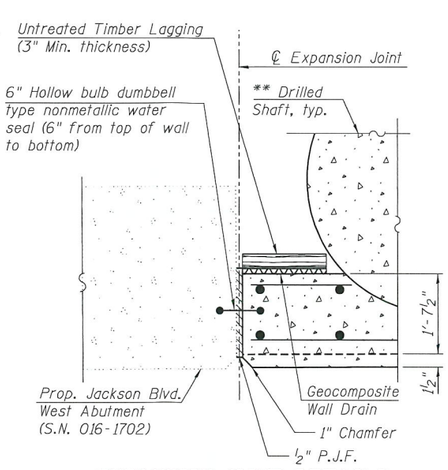

EXPANSION JOINT DETAILS

* Limits of Structure Excavation

** Drilled shaft diameter, spacing and tip elevation to be determined during final design.

LEGEND:

B.F. - denotes Back Face.
E.F. - denotes Each Face.
F.F. - denotes Front Face.

APPROVED

MAY 22 2019

AS A BASIS FOR PREPARATION OF DETAILED PLANS

DRILLED SHAFT WALL DETAILS
RETAINING WALL 8 ALONG JACKSON EXIT RAMP
F.A.I. RTE. 90/94 (KENNEDY EXPRESSWAY)
SECTION 2015-020B
COOK COUNTY
STATION 8283+53.24 TO STATION 8286+66.45
STRUCTURE NO. 016-1727

TranSystems

USER NAME = wjcolletti	DESIGNED - JNP	REVISED -	
	CHECKED - WJC	REVISED -	
PLOT SCALE = 0.17 ' / in.	DRAWN - JNP	REVISED -	
PLOT DATE = 4/29/2019	CHECKED - WJC	REVISED -	

STATE OF ILLINOIS
DEPARTMENT OF TRANSPORTATION

SHEET NO. 2 OF 3 SHEETS

F.A.I. RTE.	SECTION	COUNTY	TOTAL SHEETS	SHEET NO.
90/94	2015-020B	COOK	3	2
		CONTRACT NO. 62A78		
		ILLINOIS FED. AID PROJECT		

12:04:09 PM - pw:\\AECOM-NA-AWS.aecomonline.local:AECOM_DS02_NA\Documents\01 Americas\Transportation\60269938 Circle\Phase_II\000_CAD\008_Structural\Structure_016-1727\TSL\Sheets\016I727-62A78-SHT-TSL-002

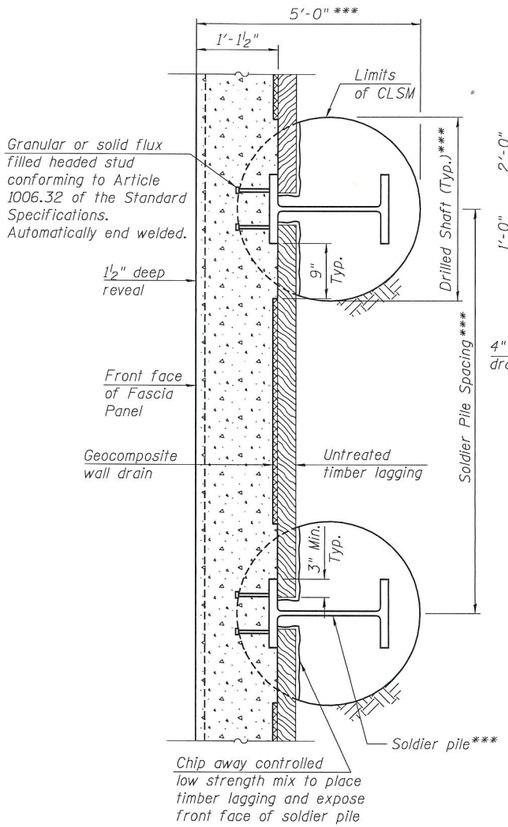

SECTION B-B

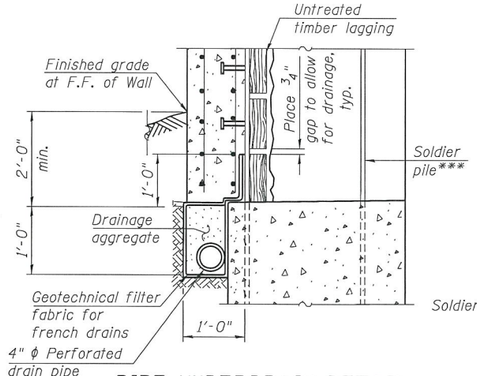

PIPE UNDERDRAIN DETAIL AT SOLDIER PILE

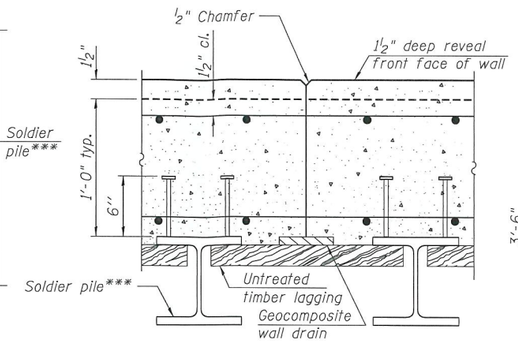

CONSTRUCTION JOINT DETAILS

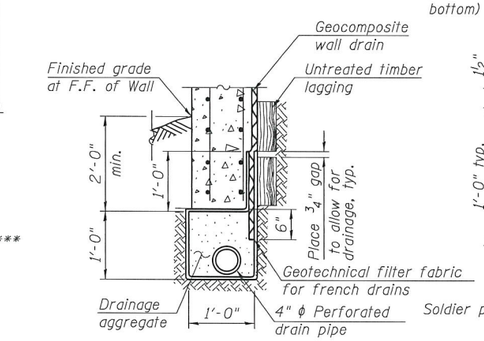

PIPE UNDERDRAIN DETAIL BETWEEN SOLDIER PILES

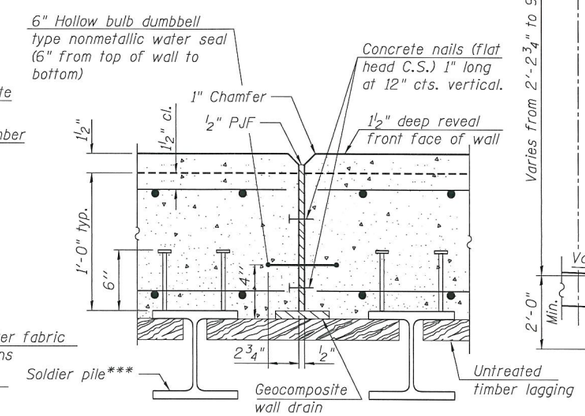

EXPANSION JOINT DETAILS

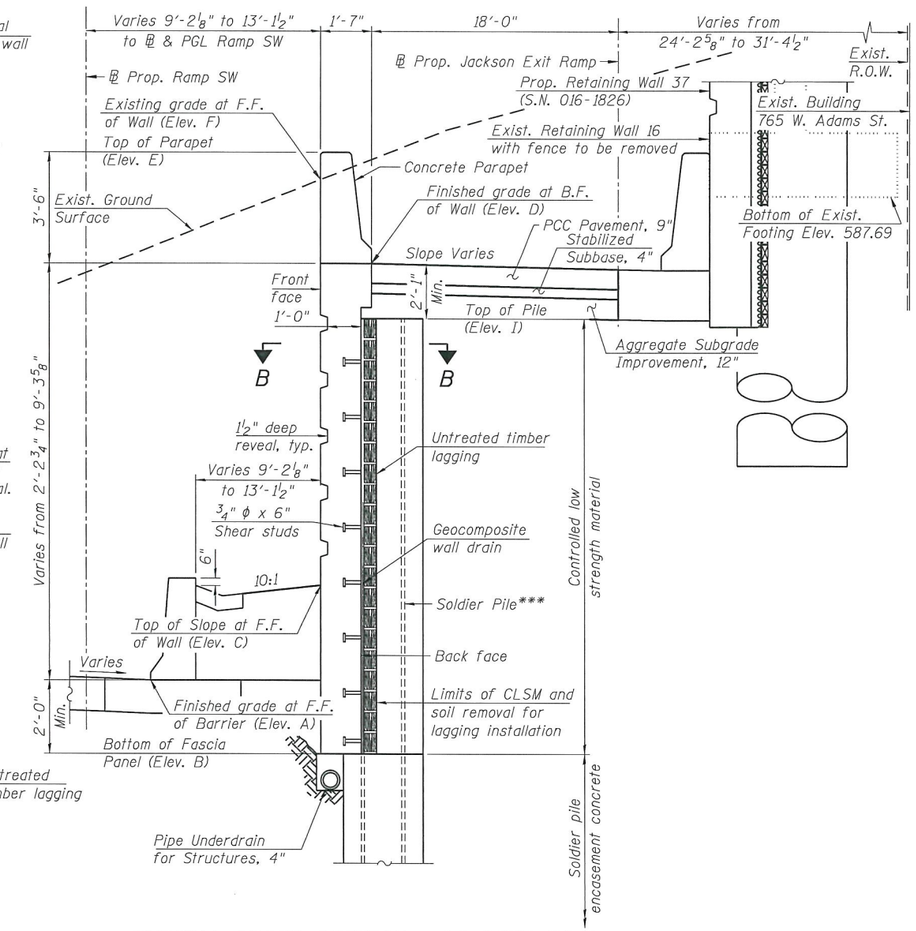

TYPICAL CROSS SECTION - SOLDIER PILE WALL

(Looking upstation)
(Sta. 8283+53.24 to Sta. 8284+73.93)

TABLE 1 - WALL ELEVATIONS

	Station	Offset	Elevation A	Elevation B	Elevation C	Elevation D	Elevation E	Elevation F	Elevation G	Elevation H	Elevation I	Wall Type
	8283+53.24	19.58' Lt.	576.78	574.78	579.76	579.01	582.51	583.57	-	-	576.92	Drilled Soldier Pile Wall
	8283+83.41	19.58' Lt.	576.90	574.90	580.06	580.70	584.20	584.02	-	-	578.62	
	8284+13.59	19.58' Lt.	576.95	574.95	580.33	582.51	586.01	584.95	-	-	580.43	
	8284+43.76	19.58' Lt.	576.93	574.93	580.35	584.32	587.82	586.20	-	-	582.23	
*	8284+73.93	19.58' Lt.	576.83	574.83	580.28	586.12	589.62	587.11	-	-	584.04	
**	8284+73.93	19.58' Lt.	576.83	574.83	580.28	586.12	589.62	587.11	584.04	580.04	-	Drilled Shafts Wall
	8285+04.11	19.58' Lt.	576.68	574.68	580.17	587.93	591.43	588.31	585.85	581.85	-	
	8285+27.48	19.58' Lt.	576.57	574.57	580.05	589.33	592.83	589.11	587.25	583.25	-	
	8285+34.24	19.58' Lt.	576.57	574.57	580.02	589.74	593.24	589.37	587.65	583.65	-	
	8285+64.24	19.58' Lt.	576.51	574.51	579.87	591.54	595.04	590.61	589.45	585.45	-	
	8285+94.24	19.58' Lt.	576.51	574.51	579.93	593.26	596.76	592.33	591.17	587.17	-	
	8286+24.24	19.58' Lt.	576.57	574.57	580.11	594.67	598.17	593.15	592.59	588.59	-	
	8286+45.65	21.99' Lt.	576.64	574.64	580.25	595.57	599.07	593.75	593.49	589.49	-	
	8286+60.95	26.85' Lt.	576.71	574.71	580.28	596.38	599.88	594.23	594.30	590.30	-	
	8286+66.45	26.95' Lt.	576.74	574.74	580.28	596.71	600.21	593.98	594.62	590.62	-	

Elevation A - Finished Grade at Front Face of Barrier
Elevation B - Bottom of Fascia Panel
Elevation C - Top of Slope at Front Face of Wall
Elevation D - Finished Grade at Back Face of Wall
Elevation E - Top of Parapet
Elevation F - Existing Grade at Front Face of Wall
Elevation G - Top of Cap
Elevation H - Top of Shaft/ Bottom of Cap
Elevation I - Top of Pile
* Elevations just to the right of joint
** Elevations just to the left of joint

*** Soldier Pile section, shaft diameter, spacing, and tip elevation to be determined during final design.

APPROVED
MAY 22 2019
AS A BASIS FOR PREPARATION OF DETAILED PLANS

DRILLED SOLDIER PILE WALL DETAILS
RETAINING WALL 8 ALONG JACKSON EXIT RAMP
F.A.I. RTE. 90/94 (KENNEDY EXPRESSWAY)
SECTION 2015-020B
COOK COUNTY
STATION 8283+53.24 TO STATION 8286+66.45
STRUCTURE NO. 016-1727

TranSystems

USER NAME = wjcolletti	DESIGNED - JNP	REVISED -	
	CHECKED - WJC	REVISED -	
PLOT SCALE = 0:2 ':' / in.	DRAWN - JNP	REVISED -	
PLOT DATE = 4/29/2019	CHECKED - WJC	REVISED -	

STATE OF ILLINOIS
DEPARTMENT OF TRANSPORTATION

SHEET NO. 3 OF 3 SHEETS

F.A.I. RTE.	SECTION	COUNTY	TOTAL SHEETS	SHEET NO.
90/94	2015-020B	COOK	3	3
		CONTRACT NO. 62A78		
		ILLINOIS FED. AID PROJECT		

10:33:49 AM - pw:\\AECOM-NA-AWS1.aecomonline.local:AECOM_DS02_NA\Documents\01 Americas\Transportation\60269938 Circle\Phase_II\000_CAD\008_Structural\Structure_016-1727\TSL\Sheets\016I727-62A78-SHT-TSL-003