Bench Mark: Set "X" on westerly jaywall of accident investigation site ±35' north of east 90/94 sign, Elevation 579.45.

Existing Structure: Exist. Cast-In-Place Ret. Wall was built in 1987 under F.A.I. Route 90/94. Section 2526.6-IP-R-3, 2626.2-28-DM & 0101.6-IP-R(85). Total length of wall is approx. 914'-5" and supported on steel H-piles. Wall height varies with max. height of approx. 21'-0". Steel sheet pilling used during wall construction was cut-off at top of wall footing elev. and left in the ground.

Traffic Control: Traffic will be maintained along existing East-South Ramp and along SB I-90/04 lanes during Construction. UIC access road behind the wall will be closed during construction.

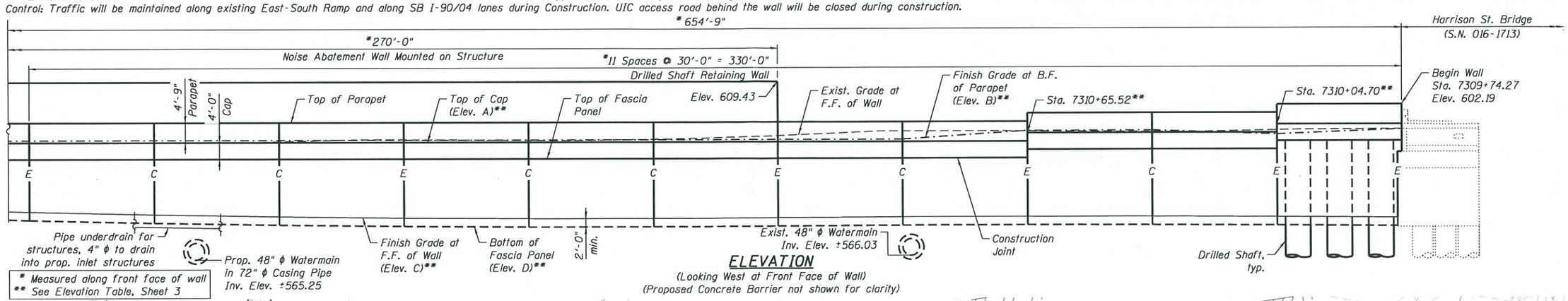

* Measured along front face of wall
** See Elevation Table, Sheet 3

ELEVATION

(Looking West at Front Face of Wall)
(Proposed Concrete Barrier not shown for clarity)

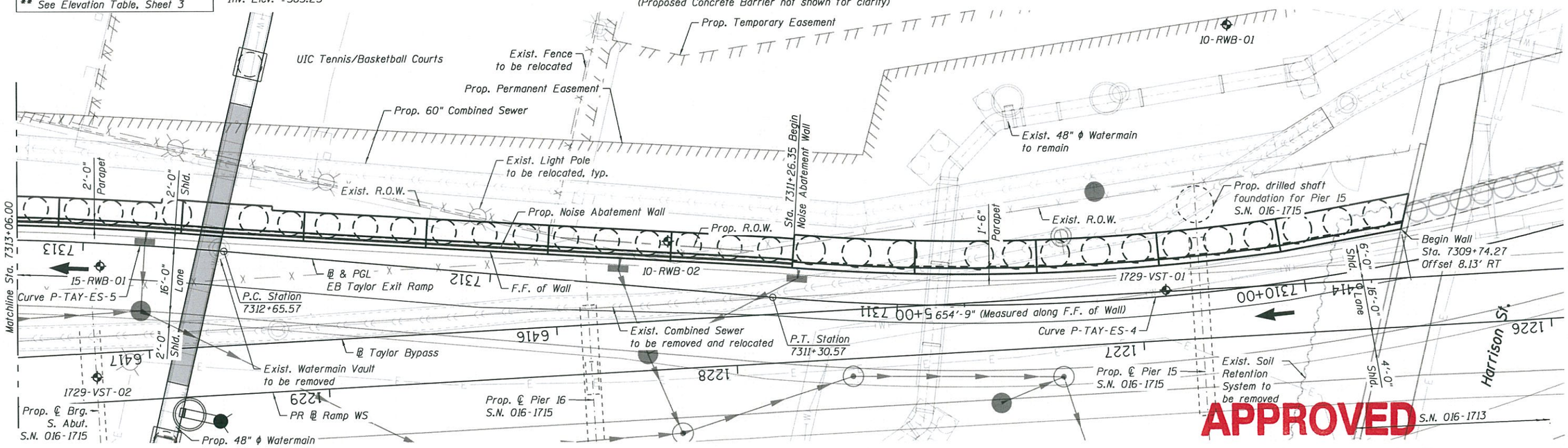

PLAN

NOTES:

1. Stations and offsets for the wall are given from the ℄ EB Taylor Exit Ramp to the front face of wall.
2. Wall to be built along straight chords between expansion and construction joints.

HIGHWAY CLASSIFICATION

EB Taylor Exit Ramp
Functional Class: Interstate
ADT: NA (2012); 2,000 (2040)
ADTT: NA (2012); 60 (2040)
DHV: 150 (2040)
Design Speed: 35 m.p.h.
Posted Speed: NA m.p.h.
One-Way Traffic
Directional Distribution: 100%

LEGEND:

Front Face	F.F.	Boring Log/Soil Test	
Back Face	B.F.	Light Pole	
Combined Sewer	—C—	Exist. Electric Cable	—E—
Exist. Storm Sewer		Prop. Lighting Cable	—L—
Prop. Storm Sewer		Fiber Optic	—FO—
Water Line	—W—	Exist. Fence	—x—x—
Fire Hydrant		Soil Retention System	
Prop. catchbasin		Construction Joint	C
		Expansion Joint	E

DESIGN SPECIFICATIONS

2014 AASHTO LRFD Bridge Design Specifications, 7th Edition with 2015 & 2016 Interims

WALL DEFLECTION CRITERIA

Maximum lateral deflection at top of the wall shall not exceed 1% exposed height of the wall.
Maximum lateral deflection at top of the Proposed Soil Retention System shall not exceed 1".

DESIGN STRESSES

FIELD UNITS

f_c' = 7,000 psi (Drilled Shafts)***
f_c' = 3,500 psi (All other concrete)
f_y = 60,000 psi (Reinforcement)

*** Final concrete strength will be determined during final design

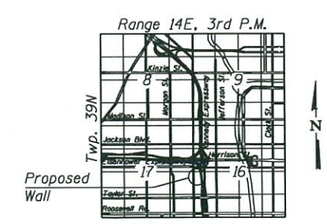

LOCATION SKETCH

APPROVED
APR 18 2017
AS A BASIS FOR PREPARATION OF DETAILED PLANS

GENERAL PLAN AND ELEVATION
RETAINING WALL 10
F.A.I. RTE. SB 90/94
(DAN RYAN EXPRESSWAY)
F.A.I. RTE. 90/94 - SECTION 2015-022-I
COOK COUNTY
STATION 7309+74.27 TO STATION 7316+31.15
STRUCTURE NO. 016-1729

0161729-62A74-S01-TSL

AECOM	USER NAME = dabezlcd	DESIGNED - DD	REVISED
		CHECKED - ATB	REVISED
	PLOT SCALE = N.T.S.	DRAWN - GF	REVISED
	PLOT DATE = 4/7/2017	CHECKED - ATB	REVISED

STATE OF ILLINOIS
DEPARTMENT OF TRANSPORTATION

SHEET NO. 1 OF 6 SHEETS

F.A.I. RTE.	SECTION	COUNTY	TOTAL SHEETS	SHEET NO.
90/94/290	2015-022-I	COOK	6	1
		CONTRACT NO. 62A74		
		ILLINOIS FED. AID PROJECT		

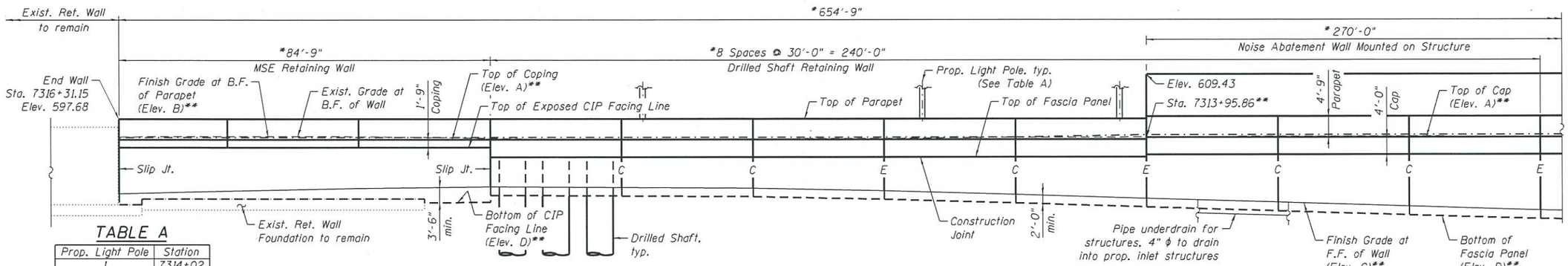

TABLE A

Prop. Light Pole	Station
1	7314+02
2	7314+47
3	7315+11

ELEVATION

(Looking West at Front Face of Wall)
(Proposed Concrete Barrier not shown for clarity)

* Measured along front face of wall
** See Elevation Table, Sheets 3 & 4

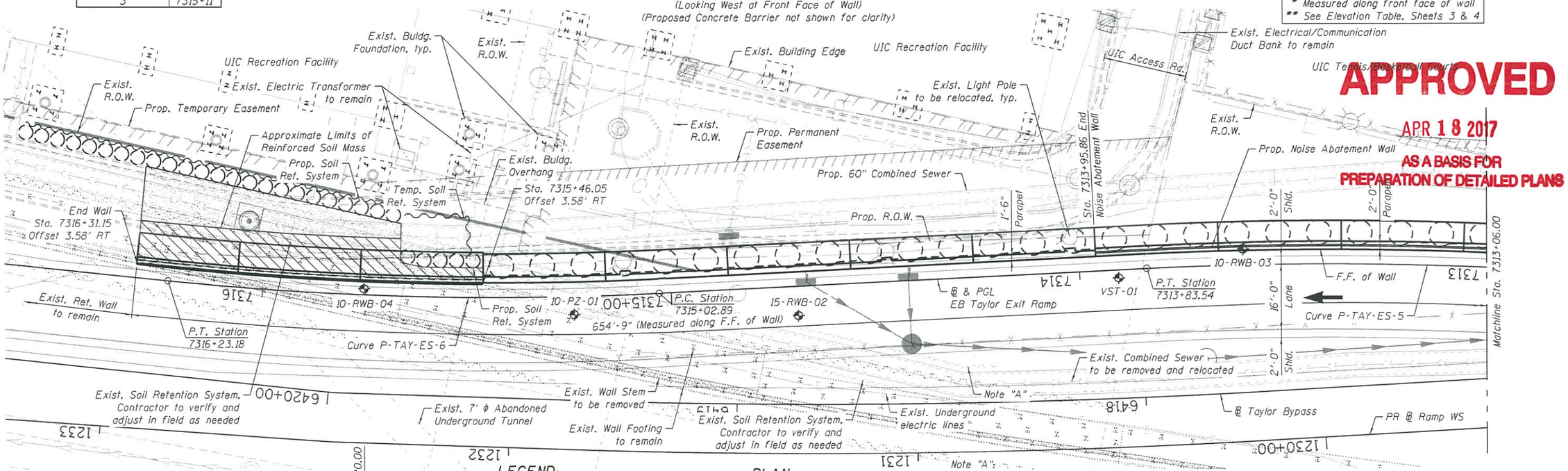

APPROVED
APR 18 2017
AS A BASIS FOR PREPARATION OF DETAILED PLANS

Note "A":
Existing steel sheet piling is shown as per as-designed plan information. Preliminary non-destructive evaluation suggests that existing steel sheeting is not present. Prior to construction contractor shall field verify presence of existing steel sheeting. Any change order due to presence of steel sheeting shall be paid for as per contract unit price of individual pay items associated with the work.

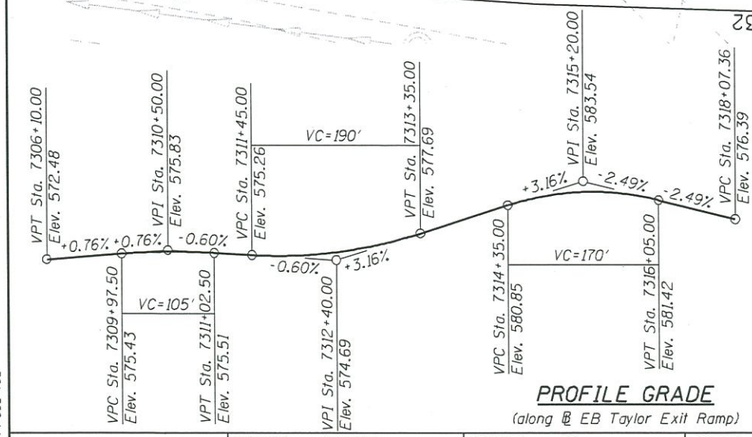

PROFILE GRADE

(along @ EB Taylor Exit Ramp)

LEGEND:

Front Face	F.F.	Boring Log/ Soil Test	
Back Face	B.F.	Light Pole	
Combined Sewer	C	Exist. Electric Cable	E
Exist. Storm Sewer		Prop. Lighting Cable	L
Prop. Storm Sewer		Fiber Optic	FO
Water Line	W	Exist. Fence	x x
Fire Hydrant		Exist. Ret. Wall Stem Removal	
Prop. catchbasin		Soil Retention System	
Construction Joint	C	Lightweight Fill outside of Reinf. Soil Mass	
Expansion Joint	E		

PLAN

CURVE DATA

(EB Taylor Exit Ramp)
Prop. Curve P-TAY-ES-4
P.I. Sta. = 7309+26.26
Δ = 44° 07' 39" (RT)
D = 10° 13' 53"
R = 560.00'
T = 226.98'
L = 431.30'
E = 44.25'
e = 5.8%
T.R. = NA
S.E. Run = 150'
P.C. Sta. = 7306+99.28
P.T. Sta. = 7311+30.57

CURVE DATA

(EB Taylor Exit Ramp)
Prop. Curve P-TAY-ES-5
P.I. Sta. = 7313+24.65
Δ = 7° 47' 11" (LT)
D = 6° 36' 03"
R = 868.00'
T = 59.07'
L = 117.96'
E = 2.01'
e = 4.4%
T.R. = NA
S.E. Run = 114'
P.C. Sta. = 7312+65.57
P.T. Sta. = 7313+83.54

CURVE DATA

(EB Taylor Exit Ramp)
Prop. Curve P-TAY-ES-6
P.I. Sta. = 7315+63.15
Δ = 8° 44' 46" (RT)
D = 7° 16' 16"
R = 788.00'
T = 60.26'
L = 120.29'
E = 2.30'
e = 4.6%
T.R. = NA
S.E. Run = 119'
P.C. Sta. = 7315+02.89
P.T. Sta. = 7316+23.18

GENERAL PLAN AND ELEVATION
RETAINING WALL 10
F.A.I. RTE. SB 90/94
(DAN RYAN EXPRESSWAY)
F.A.I. RTE. 90/94 - SECTION 2015-022-I
COOK COUNTY
STATION 7309+74.27 TO STATION 7316+31.15
STRUCTURE NO. 016-1729

AECOM

USER NAME = dabezicd	DESIGNED - DD	REVISED	
	CHECKED - ATB	REVISED	
PLOT SCALE = N.T.S.	DRAWN - GF	REVISED	
PLOT DATE = 4/17/2017	CHECKED - ATB	REVISED	

STATE OF ILLINOIS
DEPARTMENT OF TRANSPORTATION

SHEET NO. 2 OF 6 SHEETS

F.A.I. RTE.	SECTION	COUNTY	TOTAL SHEETS	SHEET NO.
90/94/290	2015-022-I	COOK	6	2
		CONTRACT NO. 62A74		
		ILLINOIS FED. AID PROJECT		

0161729-62A74-S02-TSL

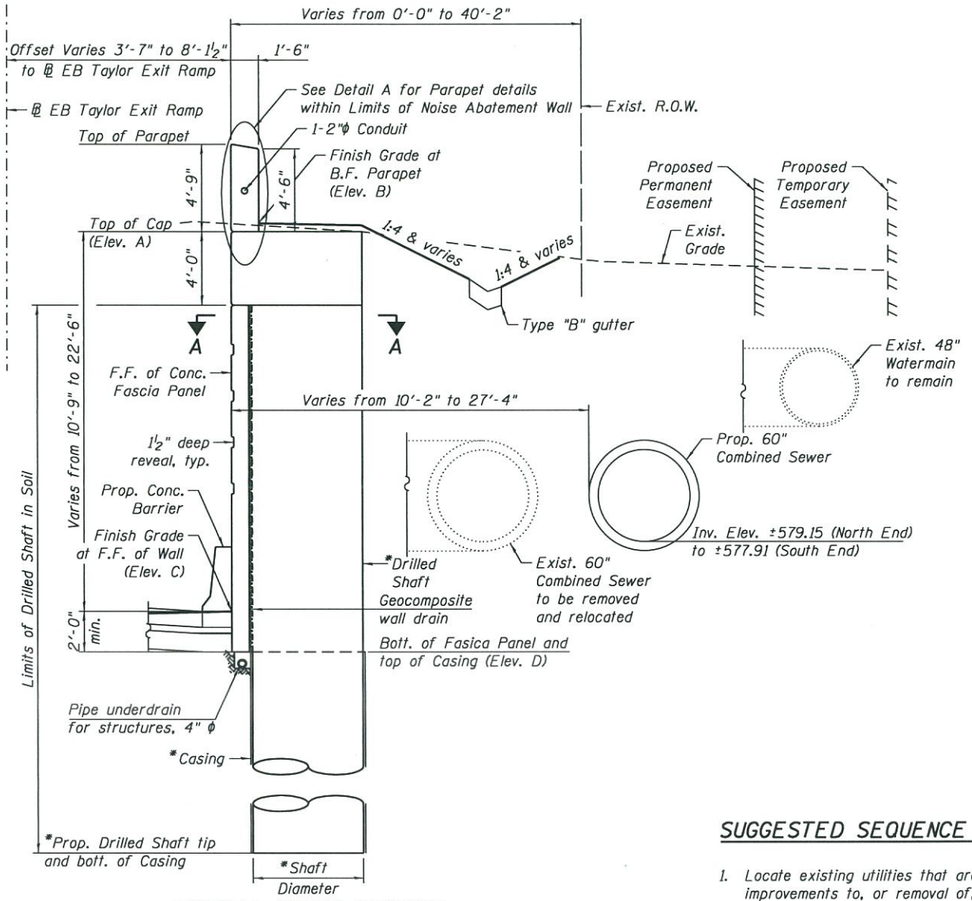

TYPICAL CROSS SECTION

(Sta. 7309+74.27 to Sta. 7315+46.05)
(Looking Upstation)

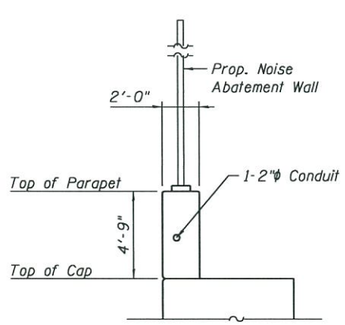

DETAIL A

(Sta. 7311+26.35 to Sta. 7313+95.86)
(Looking Upstation)

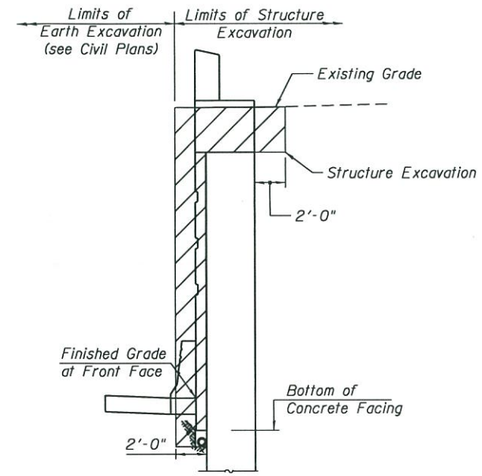

STRUCTURE EXCAVATION

NOTES:

See Sheet 5 for Section A-A.

* Drilled shaft diameter, spacing, tip elevation & casing to be determined during final design.

ELEVATION TABLE

Wall Type	Station	Offset	Elevation A	Elevation B	Elevation C	Elevation D
Drilled Shaft	7309+74.27	8.13' RT	597.44	596.21	574.91	572.91
Drilled Shaft	7310+04.70	7.58' RT	597.44 (N)	595.02	575.13	573.13
			595.44 (S)			
Drilled Shaft	7310+35.11	7.58' RT	595.44	596.00	575.26	573.26
Drilled Shaft	7310+65.52	7.58' RT	595.44 (N)	596.00	575.31	573.31
			593.43 (S)			
Drilled Shaft	7310+95.93	7.58' RT	593.43	593.99	575.29	573.29
Drilled Shaft	7311+26.35	7.58' RT	593.43	593.99	575.13	573.13
Drilled Shaft	7311+56.38	6.82' RT	593.43	593.99	575.01	573.01
Drilled Shaft	7311+86.37	5.93' RT	593.43	593.99	575.02	573.02
Drilled Shaft	7312+16.36	5.04' RT	593.43	593.99	575.21	573.21
Drilled Shaft	7312+46.35	4.15' RT	593.43	593.99	575.57	573.57
Drilled Shaft	7312+76.29	3.58' RT	593.43	593.99	576.10	574.10
Drilled Shaft	7313+06.17	3.58' RT	593.43	593.99	576.80	574.80
Drilled Shaft	7313+36.05	3.58' RT	593.43	593.99	577.65	575.65
Drilled Shaft	7313+65.92	3.58' RT	593.43	593.99	578.59	576.59
Drilled Shaft	7313+95.86	3.58' RT	593.43 (N)	593.99	579.54	577.54
			592.93 (S)			
Drilled Shaft	7314+25.86	3.58' RT	592.93	593.49	580.48	578.48
Drilled Shaft	7314+55.86	3.58' RT	592.93	593.49	581.34	579.34
Drilled Shaft	7314+85.86	3.58' RT	592.93	593.49	581.92	579.92
Drilled Shaft	7315+15.91	3.58' RT	592.93	593.49	582.04	580.04
Drilled Shaft	7315+46.05	3.58' RT	592.93	593.49	582.22	580.22

Elevation A - Top of Cap
Elevation B - Finish Grade at B.F. of Parapet
Elevation C - Finish Grade at F.F. of Wall
Elevation D - Bottom of Fascia Panel

SUGGESTED SEQUENCE OF CONSTRUCTION

1. Locate existing utilities that are to remain. Contractor to coordinate any required improvements to, or removal of, existing utilities with utility owner.
2. Complete 48" water main relocation and associated work as outline in the Civil plans.
3. Install proposed soil retention system & temporary soil retention system as shown in the plans.
4. Excavate for jacking and receiving pit.
5. Install proposed 60" Combined Sewer.
6. Excavate for proposed MSE wall and remove portion of existing wall stem that is in conflict with MSE wall construction.
7. Construct MSE wall with sacrificial fascia. Backfill jacking and receiving pit areas.
8. Cut off steel sheeting for proposed soil retention system and remove temporary soil retention system. Remove soil retention system at Southwest corner of Harrison St bridge West Abutment.
9. Drill for drilled shafts. Install permanent casing and shaft concrete to complete drill shaft construction.
10. Complete earth excavation for drilled shaft wall to bottom of facing. Install timber lagging and geocomposite wall drain between drilled shafts. Install pipe underdrain for the wall.
11. Construct concrete fascia panel for drilled shaft wall and CIP facing for MSE wall.
12. Complete removal of existing retaining wall and finish interim grading in front of the wall.

APPROVED
APR 18 2017
AS A BASIS FOR PREPARATION OF DETAILED PLANS

ELEVATION TABLE AND
DRILLED SHAFT WALL SECTION
RETAINING WALL 10
F.A.I. RTE. SB 90/94
(DAN RYAN EXPRESSWAY)
F.A.I. RTE. 90/94 - SECTION 2015-022-I
COOK COUNTY
STATION 7309+74.27 TO STATION 7316+31.15
STRUCTURE NO. 016-1729

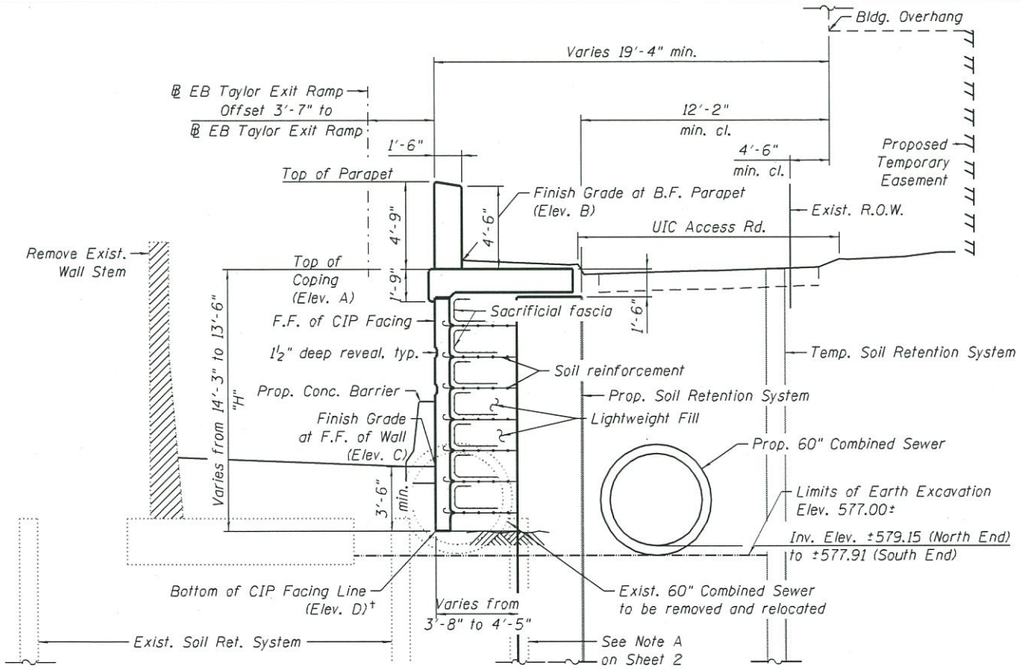

TYPICAL SECTION

(Sta. 7315+46.05 to Sta. 7315+66.46)
(Looking Upstation)

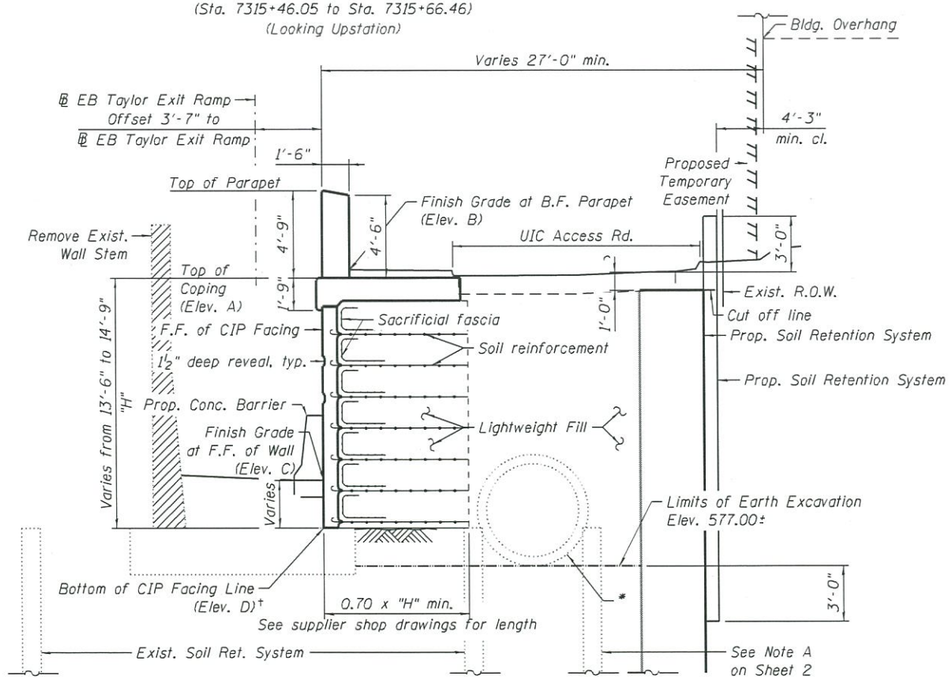

TYPICAL SECTION

(Sta. 7315+66.46 to Sta. 7316+31.15)
(Looking Upstation)

*Prop. 60" Combined Sewer (Sta. 7315+66.46 to Sta. 7316+02.31)
Exist. 60" Combined Sewer (Sta. 7316+02.31 to Sta. 7316+31.15)

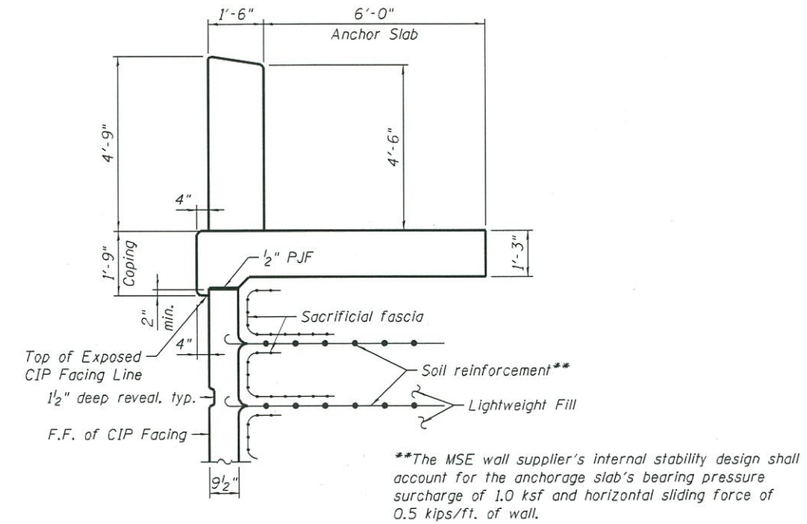

**The MSE wall supplier's internal stability design shall account for the anchorage slab's bearing pressure surcharge of 1.0 ksf and horizontal sliding force of 0.5 kips/ft. of wall.

MSE SECTION

(Looking Upstation)

ELEVATION TABLE

Wall Type	Station	Offset	Elevation A	Elevation B	Elevation C	Elevation D
MSE	7315+46.05	3.58' RT	592.93	593.49	582.22	578.72
MSE	7315+76.18	3.58' RT	592.93	593.49	581.91	579.44
MSE	7316+06.32	3.58' RT	592.93	593.49	581.31	579.44
MSE	7316+31.15	3.58' RT	592.93	593.49	580.69	578.19

Elevation A - Top of Coping
Elevation B - Finish Grade at B.F. of Parapet
Elevation C - Finish Grade at F.F. of Wall
Elevation D - Bottom of CIP Facing Line

NOTES:

† From Sta. 7315+61.16 to Sta. 7316+31.15 MSE Panels are supported on the existing Ret. Wall footing.

1. For Proposed & Temporary Soil Retention System see Sheet 6.

APPROVED
APR 18 2017
AS A BASIS FOR
PREPARATION OF DETAILED PLANS

ELEVATION TABLE AND
MSE WALL SECTION
RETAINING WALL 10
F.A.I. RTE. SB 90/94
(DAN RYAN EXPRESSWAY)
F.A.I. RTE. 90/94 - SECTION 2015-022-I
COOK COUNTY
STATION 7309+74.27 TO STATION 7316+31.15
STRUCTURE NO. 016-1729

0161729-62A74-S04-TSL

AECOM

USER NAME = dabezicd	DESIGNED - DD	REVISED	
	CHECKED - ATB	REVISED	
PLOT SCALE = N.T.S.	DRAWN - GF	REVISED	
PLOT DATE = 4/17/2017	CHECKED - ATB	REVISED	

STATE OF ILLINOIS
DEPARTMENT OF TRANSPORTATION

SHEET NO. 4 OF 6 SHEETS

F.A.I. RTE.	SECTION	COUNTY	TOTAL SHEETS	SHEET NO.
90/94/290	2015-022-I	COOK	6	4
		CONTRACT NO. 62A74		
	ILLINOIS	FED. AID PROJECT		

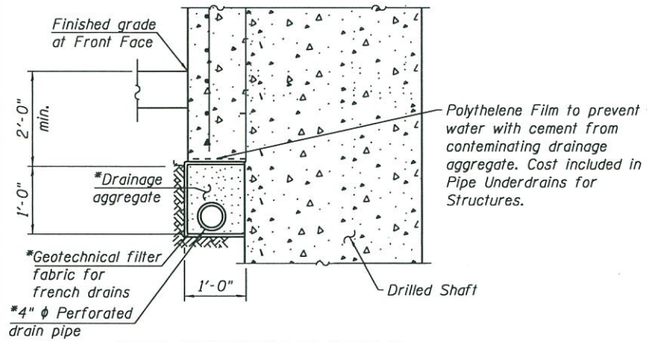

PIPE UNDERDRAIN DETAIL

(At Drilled Shaft)
(Roadway Barrier is not shown for clarity)

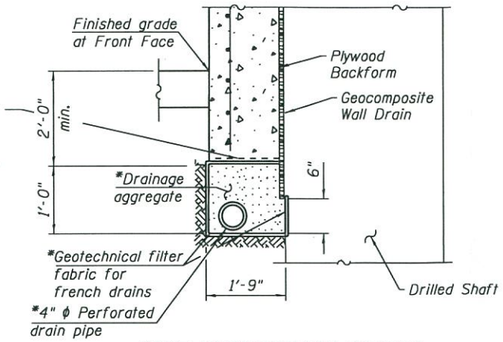

PIPE UNDERDRAIN DETAIL

(Between Drilled Shaft)
(Roadway barrier is not shown for clarity)

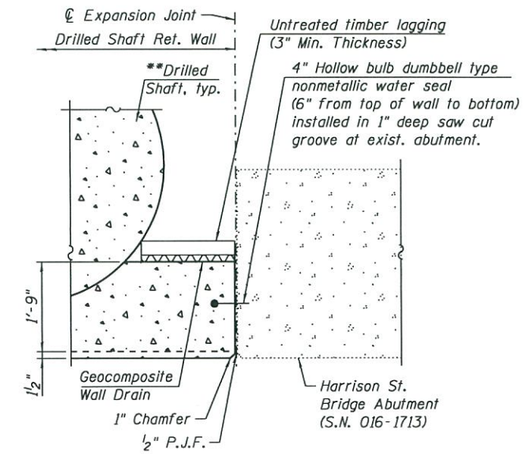

EXPANSION JOINT DETAILS AT HARRISON ST. BRIDGE ABUTMENT

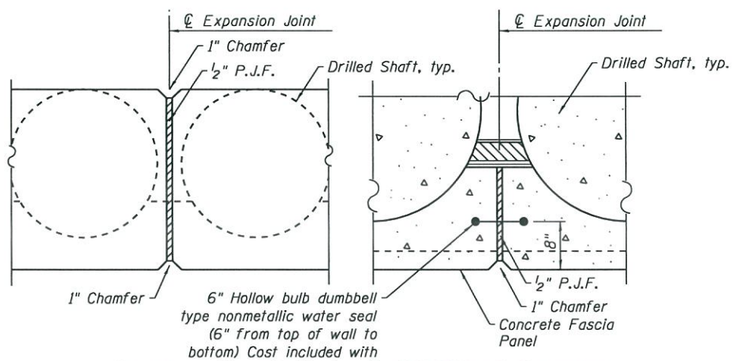

PLAN
(Cap)

SECTION THRU WALL

EXPANSION JOINT DETAILS

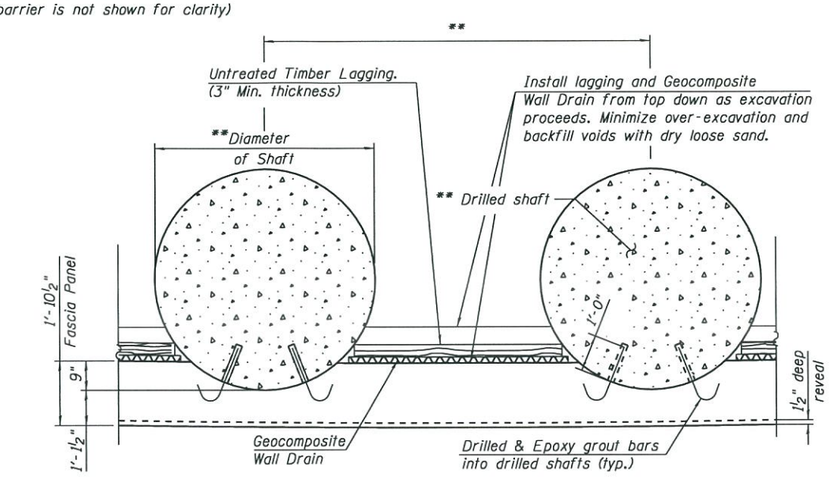

SECTION A-A

(Shaft Reinforcement not shown for clarity)

CURVE DATA

(Ramp WS)
Prop. Curve P-CIR-WS-3
P.I. Sta. = 1231+01.94
Δ = 5° 04' 12" (RT)
D = 3° 00' 56"
R = 1,900.00'
T = 84.12'
L = 168.13'
E = 1.86'
e = 4.0%
T.R. = NA
S.E. Run = 44'
P.C. Sta. = 1230+17.82
P.T. Sta. = 1231+85.95

APPROVED
APR 18 2017
AS A BASIS FOR PREPARATION OF DETAILED PLANS

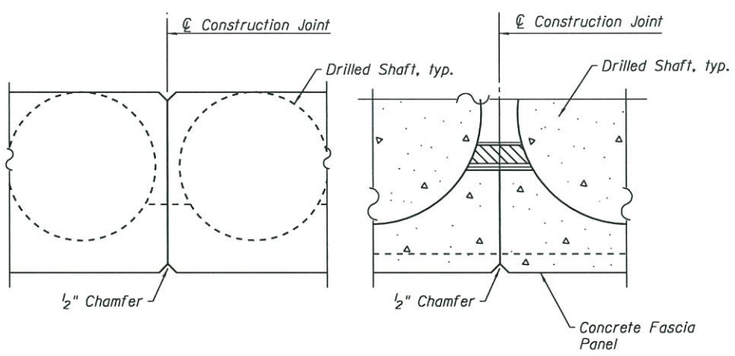

PLAN
(Cap)

SECTION THRU WALL

CONSTRUCTION JOINT DETAILS

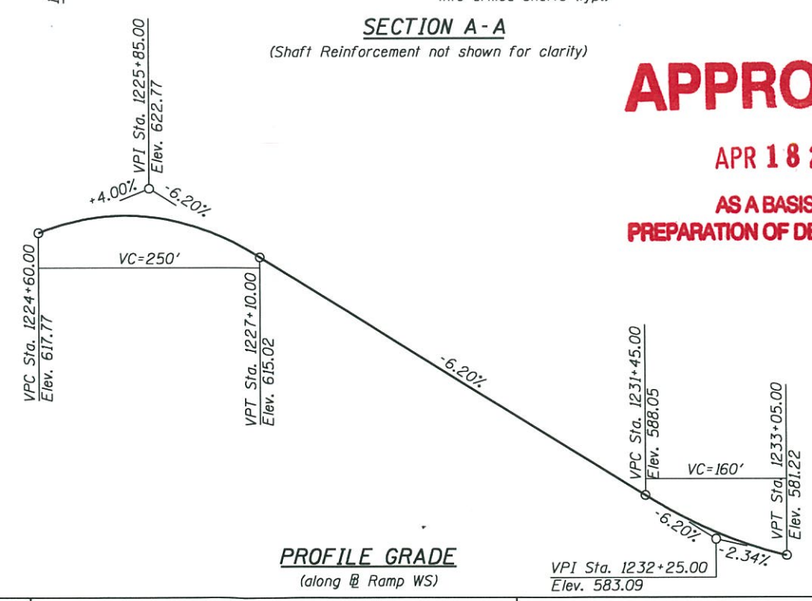

PROFILE GRADE

(along ℄ Ramp WS)

NOTES:

* Included in the cost of pipe Underdrains for Structures.

** Drilled shaft diameter, spacing, tip elevation and casing to be determined during final design.

DRILLED SHAFT WALL DETAILS
RETAINING WALL 10
F.A.I. RTE. SB 90/94
(DAN RYAN EXPRESSWAY)
F.A.I. RTE. 90/94 - SECTION 2015-022-I
COOK COUNTY
STATION 7309+74.27 TO STATION 7316+31.15
STRUCTURE NO. 016-1729

0161729-62A74-S05-TSL

AECOM

USER NAME = dabezlcd	DESIGNED - DD	REVISED	
	CHECKED - ATB	REVISED	
PLOT SCALE = N.T.S.	DRAWN - GF	REVISED	
PLOT DATE = 4/7/2017	CHECKED - ATB	REVISED	

STATE OF ILLINOIS
DEPARTMENT OF TRANSPORTATION

SHEET NO. 5 OF 6 SHEETS

F.A.I. RTE.	SECTION	COUNTY	TOTAL SHEETS	SHEET NO.
90/94/290	2015-022-I	COOK	6	5
		CONTRACT NO. 62A74		
		ILLINOIS FED. AID PROJECT		

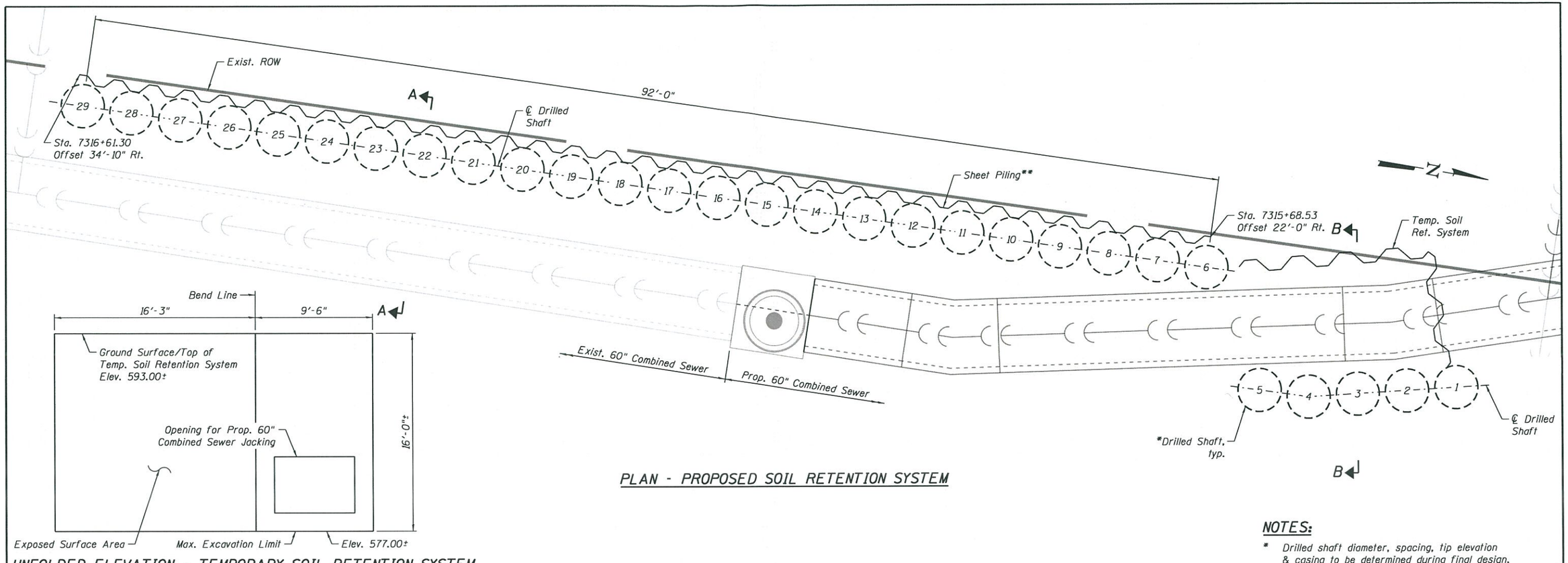

PLAN - PROPOSED SOIL RETENTION SYSTEM

UNFOLDED ELEVATION - TEMPORARY SOIL RETENTION SYSTEM

Drilled Shaft Schedule			
Shaft No.	Station	Offset (ft)	Excavation Elev. Z
1	7315+48.58	9.00 Rt.	577.00±
2	7315+52.62	9.00 Rt.	577.00±
3	7315+56.67	9.00 Rt.	577.00±
4	7315+60.71	9.00 Rt.	577.00±
5	7315+64.69	9.75 Rt.	577.00±
6	7315+68.53	19.88 Rt.	577.00±
7	7315+72.56	20.62 Rt.	577.00±
8	7315+76.61	21.34 Rt.	577.00±
9	7315+80.66	22.04 Rt.	577.00±
10	7315+84.71	22.72 Rt.	577.00±
11	7315+88.78	23.38 Rt.	577.00±
12	7315+92.85	24.02 Rt.	577.00±
13	7315+96.93	24.64 Rt.	577.00±
14	7316+01.01	25.24 Rt.	577.00±
15	7316+05.10	25.82 Rt.	577.00±
16	7316+09.20	26.37 Rt.	577.00±
17	7316+13.30	26.91 Rt.	577.00±
18	7316+17.41	27.43 Rt.	577.00±
19	7316+21.52	27.92 Rt.	577.00±
20	7316+25.56	28.40 Rt.	577.00±
21	7316+29.53	28.88 Rt.	577.00±
22	7316+33.50	29.35 Rt.	579.00±
23	7316+37.47	29.83 Rt.	581.00±
24	7316+41.44	30.30 Rt.	583.00±
25	7316+45.41	30.78 Rt.	585.00±
26	7316+49.39	31.26 Rt.	587.00±
27	7316+53.36	31.73 Rt.	589.00±
28	7316+57.33	32.21 Rt.	591.00±
29	7316+61.30	32.69 Rt.	593.00±

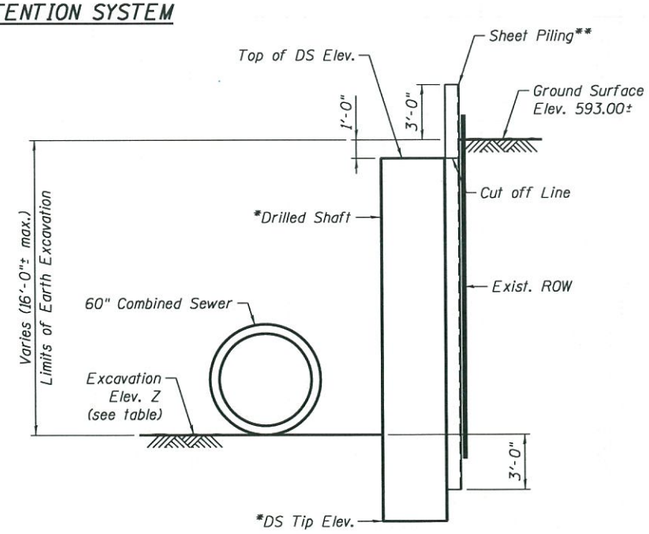

SECTION A-A

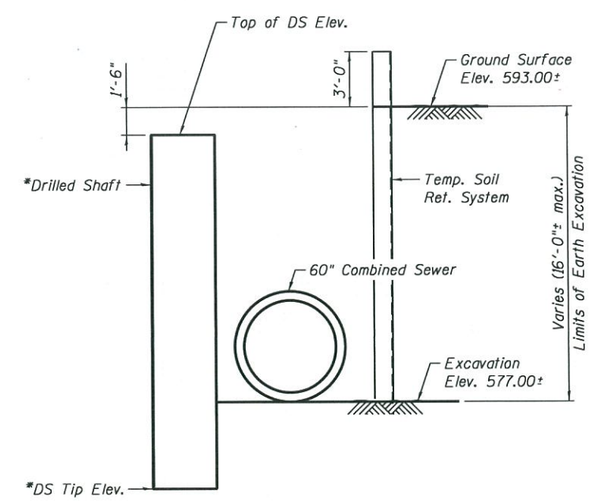

SECTION B-B

NOTES:

* Drilled shaft diameter, spacing, tip elevation & casing to be determined during final design.

** Sheet piling to be determined during final design.

1. Stations and offsets for the Prop. Soil Ret. System are given from the ℄ EB Taylor Exit Ramp to the center of drilled shafts.

APPROVED

APR 18 2017

AS A BASIS FOR PREPARATION OF DETAILED PLANS

PROPOSED SOIL RETENTION SYSTEM
RETAINING WALL 10
F.A.I. RTE. SB 90/94
(DAN RYAN EXPRESSWAY)
F.A.I. RTE. 90/94 - SECTION 2015-022-I
COOK COUNTY
STATION 7309+74.27 TO STATION 7316+31.15
STRUCTURE NO. 016-1729

AECOM

USER NAME = dabezlcd	DESIGNED - DD	REVISED	
	CHECKED - ATB	REVISED	
PLOT SCALE = N.T.S.	DRAWN - GF	REVISED	
PLOT DATE = 4/7/2017	CHECKED - ATB	REVISED	

STATE OF ILLINOIS
DEPARTMENT OF TRANSPORTATION

SHEET NO. 6 OF 6 SHEETS

F.A.I. RTE.	SECTION	COUNTY	TOTAL SHEETS	SHEET NO.
90/94/290	2015-022-I	COOK	6	6
		CONTRACT NO. 62A74		
		ILLINOIS FED. AID PROJECT		

0161729-62A74-S06-TSL