Bench Mark: Cut square on northwest corner of sign foundation at north side of Harrison Street, approximately 80' west of west line of Morgan Street. Elev. = 593.07

Existing Structure: Existing Retaining Wall 10. Constructed in 1955 under U.I. 261 (101) F.A. Route 131; Section 2525-103. Reinforced concrete wall on timber piles. Total length of 532'-9" from Halsted Street to Peoria Street. Height varies 17'-6" to 17'-7". The existing wall is to be removed and replaced from Sta. 7300+52 to Sta. 7305+84.

I-290 EB traffic control to be utilized during construction.

No Salvage.

Notes:

1.) Wall offsets are measured from the ℄ of Taylor St. Exit to the front face of cast-in-place fascia panels.
2.) C denotes Construction Joint.
3.) E denotes Expansion Joint.
4.) F.F. denotes Front Face.
5.) B.F. denotes Back Face.
6.) Wall to be built along straight chords between construction and expansion joints.
7.) Drilled shaft diameter, spacing and tip elevation to be determined during final design.
8.) The Contractor shall field verify locations of existing underground utilities and drainage structures.

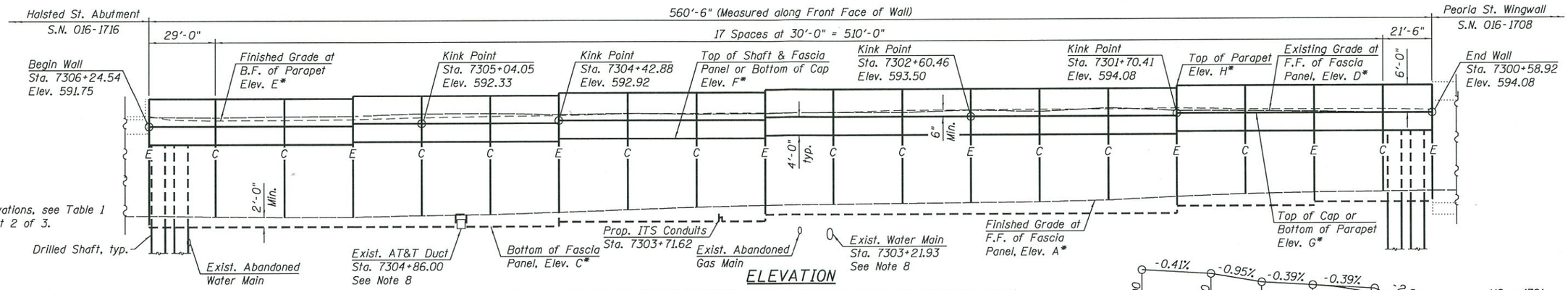

ELEVATION

(Looking South at F.F. of Wall. Proposed Concrete Barrier not shown for clarity.)

APPROVED

FEB 24 2017

AS A BASIS FOR PREPARATION OF DETAILED PLANS

PROFILE GRADE

(Along ℄ Taylor Street Exit)

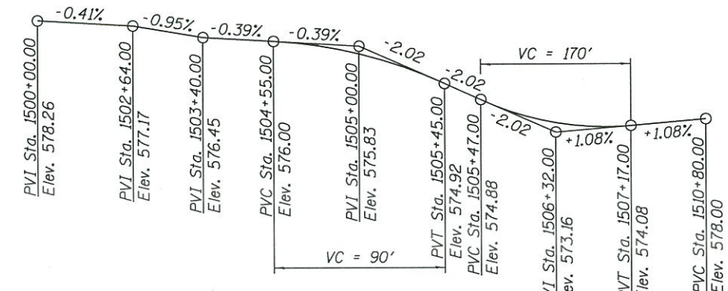

PROFILE GRADE

(Along ℄ Ramp ES)

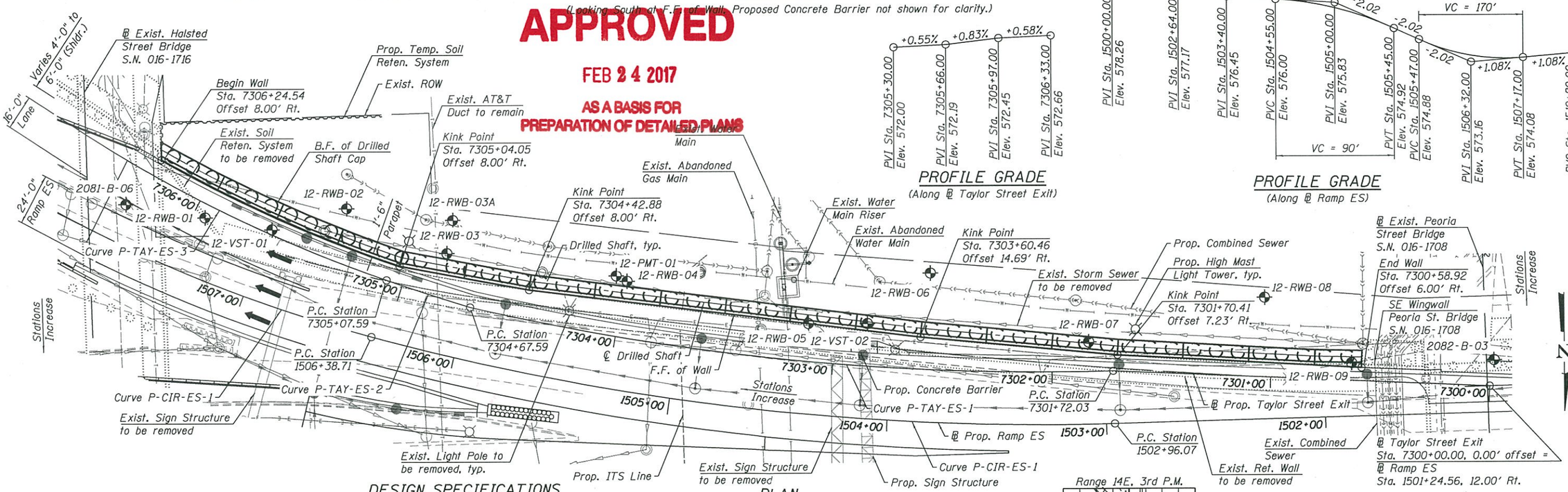

PLAN

HIGHWAY CLASSIFICATION

Ramp ES
Functional Class: Interstate
ADT: 43,900 (2012); 44,000 (2040)
ADTT: 4,226 (2012); 4,235 (2040)
DHV: 2,140 (2040)
Design Speed: 40 m.p.h.
Posted Speed: 35 m.p.h.
One-Way Traffic
Directional Distribution: 100%

Taylor Street Exit
Functional Class: Interstate
ADT: 2,600 (2012); 2,000 (2040)
ADTT: 100 (2012); 80 (2040)
DHV: 154 (2040)
Design Speed: 35 m.p.h.
Posted Speed: 30 m.p.h.
One-Way Traffic
Directional Distribution: 100%

DESIGN SPECIFICATIONS

2014 AASHTO LRFD Bridge Design Specifications 7th Edition with 2015 and 2016 Interim Specifications

DESIGN STRESSES

FIELD UNITS

f'c = 7,000 psi (Drilled Shafts)**
f'c = 3,500 psi (All other concrete)
fy = 60,000 psi (Reinforcement)

** Final concrete strength will be determined during final design

WALL DEFLECTION CRITERIA:

Maximum total lateral wall deflection at top of the wall: 2.5 inch

LEGEND:

Ex. Chain Link Fence — X —
Combined Sewer
Electric — E —
Water — W —
Fiber Optic — FO —
Ex. Storm Sewer
Prop. Storm Sewer
Soil Boring

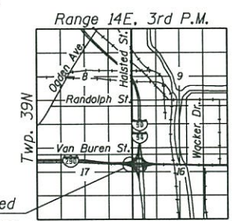

LOCATION SKETCH

GENERAL PLAN AND ELEVATION
RETAINING WALL 12 ALONG TAYLOR ST. EXIT
F.A.I. RTE. 290 (EISENHOWER EXPRESSWAY)
SECTION 2014-002R&B
COOK COUNTY
STATION 7300+58.92 TO STATION 7306+24.54
STRUCTURE NO. 016-1801

TranSystems

USER NAME = tlrevzin	DESIGNED - WJC	REVISED -
	CHECKED - DL	REVISED -
PLOT SCALE = 48.00 ' / in.	DRAWN - WJC/TLR	REVISED -
PLOT DATE = 2/10/2017	CHECKED - DL	REVISED -

STATE OF ILLINOIS
DEPARTMENT OF TRANSPORTATION

SHEET NO. 1 OF 3 SHEETS

F.A.I. RTE.	SECTION	COUNTY	TOTAL SHEETS	SHEET NO.
290	2014-002R&B	COOK	3	1
		CONTRACT NO. 60X76		
		ILLINOIS FED. AID PROJECT		

9/10/17 AM - pw:\\61f479-PWINT.oecomonline.local:AECOM_DS02_NA\Documents\01 Americas\Transportation\60269938 Circle\Phase_II\000_CAD\008_Structural\Structure_016-1801\TSL\Sheets\016180I-60X76-SHT-TSL-001

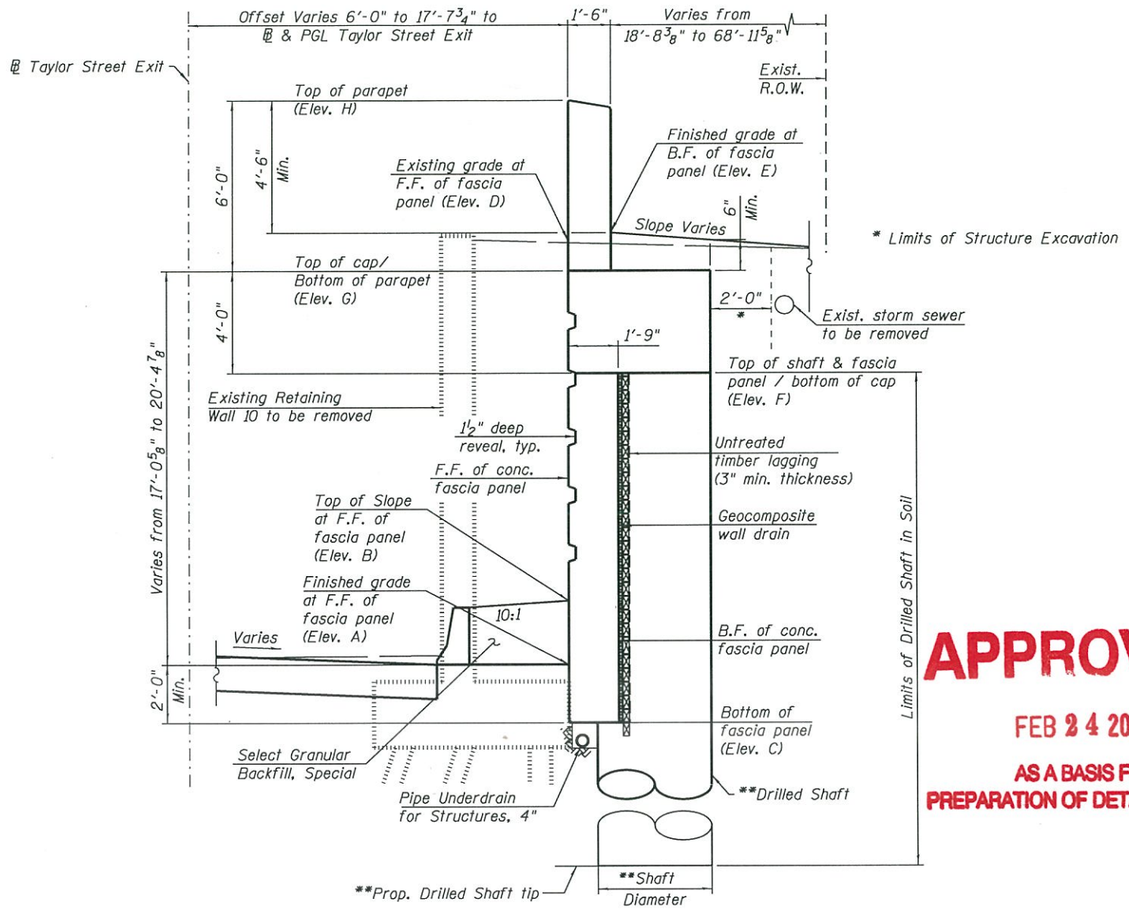

TYPICAL CROSS SECTION

(Looking Upstation)

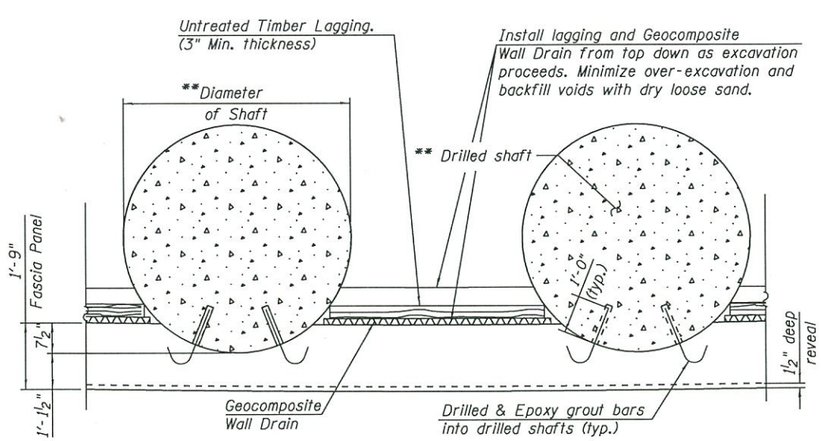

SECTION A-A

(Shaft Reinforcement not shown for clarity)

APPROVED

FEB 24 2017

AS A BASIS FOR
PREPARATION OF DETAILED PLANS

TABLE 1 - WALL ELEVATIONS

	Station	Offset	Elevation A	Elevation B	Elevation C	Elevation D	Elevation E	Elevation F	Elevation G	Elevation H
	7300+58.92	6.00' Rt.	577.02	580.52	574.67	594.21	594.69	590.08	594.08	600.08
	7300+80.42	6.26' Rt.	576.89	580.46	574.67	594.12	594.87	590.08	594.08	600.08
	7301+10.42	6.63' Rt.	576.74	580.34	574.67	594.44	594.89	590.08	594.08	600.08
	7301+10.42	6.63' Rt.	576.74	580.34	573.83	594.44	594.89	590.08	594.08	600.08
	7301+40.41	7.00' Rt.	576.43	580.07	573.83	594.57	594.92	590.08	594.08	600.08
†	7301+70.41	7.37' Rt.	575.90	579.58	573.83	594.65	595.18	590.08	594.08	600.08
††	7301+70.41	7.37' Rt.	575.90	579.58	572.25	594.65	595.18	589.50	593.50	599.50
	7301+99.94	10.50' Rt.	575.23	579.06	572.25	595.16	595.00	589.50	593.50	599.50
	7302+30.15	12.99' Rt.	574.82	578.86	572.25	594.55	595.00	589.50	593.50	599.50
	7302+60.46	14.69' Rt.	574.71	578.93	572.25	594.90	594.93	589.50	593.50	599.50
	7302+90.82	16.47' Rt.	574.59	578.98	572.25	594.45	594.90	589.50	593.50	599.50
	7303+21.25	17.45' Rt.	574.47	578.95	572.25	594.51	594.47	589.50	593.50	599.50
†	7303+51.72	17.65' Rt.	574.31	578.81	572.25	594.44	594.41	589.50	593.50	599.50
††	7303+51.72	17.65' Rt.	574.31	578.81	570.83	594.44	594.41	588.92	592.92	598.92
	7303+82.17	17.05' Rt.	573.95	578.39	570.83	594.25	594.42	588.92	592.92	598.92
	7304+12.57	15.67' Rt.	573.42	577.73	570.83	594.44	594.36	588.92	592.92	598.92
†	7304+42.88	13.49' Rt.	572.87	576.96	570.83	594.21	594.12	588.92	592.92	598.92
††	7304+42.88	13.49' Rt.	572.87	576.96	569.83	594.21	594.12	588.33	592.33	598.33
	7304+74.06	11.98' Rt.	572.45	576.39	569.83	594.50	593.83	588.33	592.33	598.33
	7305+04.05	8.00' Rt.	572.09	575.59	569.83	594.47	593.60	588.33	592.33	598.33
†	7305+34.41	8.00' Rt.	571.93	575.43	569.83	593.93	593.16	588.33	592.33	598.33
††	7305+34.41	8.00' Rt.	571.93	575.43	569.83	593.93	593.16	587.75	591.75	597.75
	7305+64.79	8.00' Rt.	571.92	575.42	569.83	593.85	593.07	587.75	591.75	597.75
	7305+95.17	8.00' Rt.	572.04	575.54	569.83	593.67	593.03	587.75	591.75	597.75
	7306+24.54	8.00' Rt.	572.18	575.68	569.83	593.78	593.22	587.75	591.75	597.75

Elevation A- Finished Grade at Front Face of Fascia Panel
Elevation B- Top of Slope at Front Face of Fascia Panel
Elevation C- Bottom of Fascia Panel
Elevation D- Existing Grade at Front Face of Fascia Panel
Elevation E- Finished Grade at Back Face of Fascia Panel
Elevation F- Top of Shaft & Fascia Panel / Bottom of Cap
Elevation G- Top of Cap / Bottom of Parapet
Elevation H- Top of Parapet
† Elevations just to the right of joint
†† Elevations just to the left of joint

CURVE DATA

(Ramp ES)
Prop. Curve P-CIR-ES-1
P.I. Sta. = 1504+68.66
Δ = 16° 40' 30" (RT)
D = 4° 52' 05"
R = 1,177.00'
T = 172.49'
L = 342.55'
E = 12.57'
e = 5.20%
T.R. = NA
S.E. Run = 71'
P.C. Sta. = 1502+96.17
P.T. Sta. = 1506+38.71

CURVE DATA

(Ramp ES)
Prop. Curve P-CIR-ES-2
P.I. Sta. = 1510+49.08
Δ = 63° 26' 03" (RT)
D = 8° 37' 44"
R = 664.00'
T = 410.37'
L = 735.14'
E = 116.58'
e = 5.80%
T.R. = 41'
S.E. Run = 120'
P.C. Sta. = 1506+38.71
P.T. Sta. = 1513+73.85

CURVE DATA

(Taylor Street Exit)
Prop. Curve P-TAY-ES-1
P.I. Sta. = 7303+20.62
Δ = 14° 41' 14" (RT)
D = 4° 58' 09"
R = 1,153.00'
T = 148.59'
L = 295.56'
E = 9.54'
e = MATCH MAINLINE
T.R. = NA
S.E. Run = NA
P.C. Sta. = 7301+72.03
P.T. Sta. = 7304+67.59

CURVE DATA

(Taylor Street Exit)
Prop. Curve P-TAY-ES-2
P.I. Sta. = 7304+87.59
Δ = 1° 59' 16" (RT)
D = 4° 58' 09"
R = 1,153.00'
T = 20.00'
L = 40.00'
E = 0.17'
e = MATCH MAINLINE
T.R. = NA
S.E. Run = NA
P.C. Sta. = 7304+67.59
P.T. Sta. = 7305+07.59

CURVE DATA

(Taylor Street Exit)
Prop. Curve P-TAY-ES-3
P.I. Sta. = 7306+04.16
Δ = 17° 09' 39" (RT)
D = 8° 57' 09"
R = 640.00'
T = 96.57'
L = 191.69'
E = 7.24'
e = MATCH MAINLINE
T.R. = NA
S.E. Run = NA
P.C. Sta. = 7305+07.59
P.T. Sta. = 7306+99.28

**Drilled shaft diameter, spacing and tip elevation to be determined during final design.

LEGEND:

B.F. - denotes Back Face.
E.F. - denotes Each Face.
F.F. - denotes Front Face.

CROSS SECTION AND DETAILS
RETAINING WALL 12 ALONG TAYLOR ST. EXIT
F.A.I. RTE. 290 (EISENHOWER EXPRESSWAY)
SECTION 2014-002R&B
COOK COUNTY
STATION 7300+58.92 TO STATION 7306+24.54
STRUCTURE NO. 016-1801

TranSystems

USER NAME = tlrevzin	DESIGNED - WJC	REVISED -
	CHECKED - DL	REVISED -
PLOT SCALE = 0.17 ' / in.	DRAWN - WJC/TLR	REVISED -
PLOT DATE = 2/10/2017	CHECKED - DL	REVISED -

STATE OF ILLINOIS
DEPARTMENT OF TRANSPORTATION

SHEET NO. 2 OF 3 SHEETS

F.A.I. RTE.	SECTION	COUNTY	TOTAL SHEETS	SHEET NO.
290	2014-002R&B	COOK	3	2
		CONTRACT NO. 60X76		
		ILLINOIS FED. AID PROJECT		

8:55:27 AM - pw:\\61f479-PWINT.decomonline.local:AECOM_DS02_NA\Documents\01 Americas\Transportation\60269938 Circle\Phase_II\000_CAD\008_Structural\Structure_016-1801\TSL\Sheets\016180-60X76-SHT-TSL-002

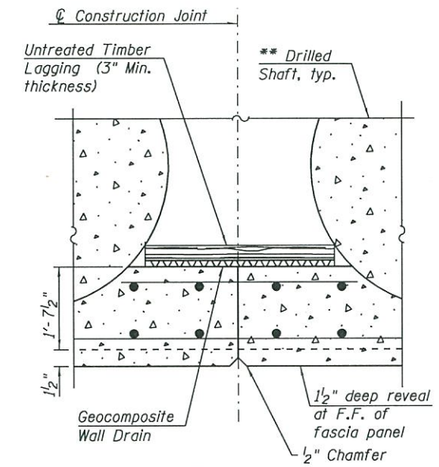

CONSTRUCTION JOINT DETAILS

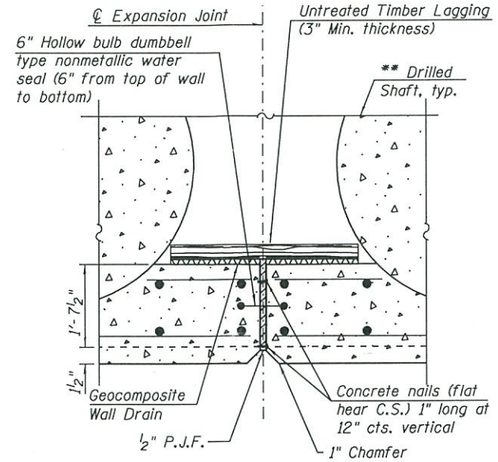

EXPANSION JOINT DETAILS

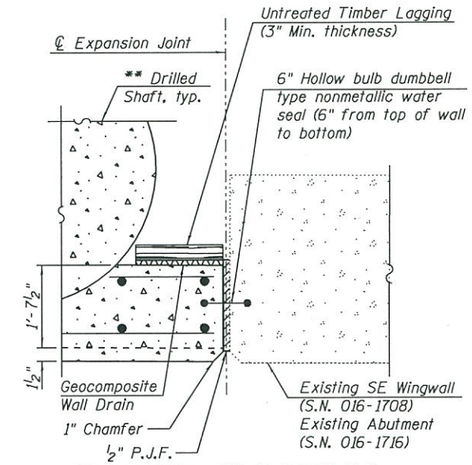

EXPANSION JOINT DETAILS

APPROVED

FEB 24 2017

AS A BASIS FOR PREPARATION OF DETAILED PLANS

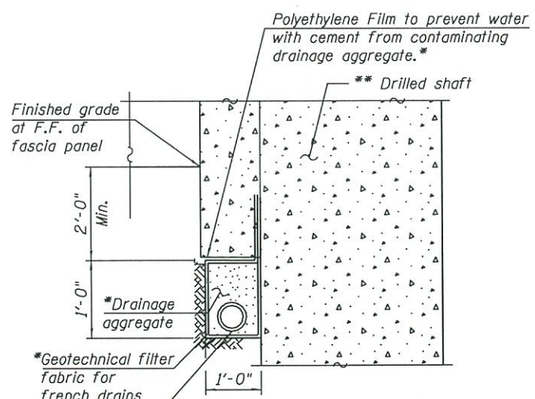

PIPE UNDERDRAIN DETAIL AT DRILLED SHAFT

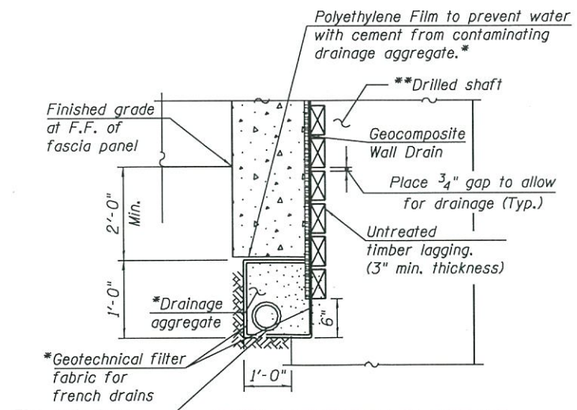

PIPE UNDERDRAIN DETAIL BETWEEN DRILLED SHAFTS

*Cost included with "Pipe Underdrains for Structures, 4".

**Drilled shaft diameter, spacing and tip elevation to be determined during final design.

DETAILS
RETAINING WALL 12 ALONG TAYLOR ST. EXIT
F.A.I. RTE. 290 (EISENHOWER EXPRESSWAY)
SECTION 2014-002R&B
COOK COUNTY
STATION 7300+58.92 TO STATION 7306+24.54
STRUCTURE NO. 016-1801