Benchmark: Cut square on center of door entrance to 707 W. Harrison St. (south side of Harrison St., approx. 90' west of west line of Des Plaines St.). Elevation 597.47.

Existing Structure: None.

Traffic Control: Traffic shall be maintained on the existing Ramp EN structure (S.N. 016-2453) during construction of the proposed retaining wall. Subsequently, traffic shall be detoured to allow for construction of the remaining portions of the proposed Ramp EN (S.N. 016-1712) approaches and bridge structure.

DESIGN SPECIFICATIONS

2014 AASHTO LRFD Bridge Design Specifications, 7th Edition with 2015 and 2016 Interim Revisions

DESIGN STRESSES

FIELD UNITS

f'c = 3,500 psi
fy = 60,000 psi (Reinforcement)

PRECAST UNITS

f'c = 4,500 psi

APPROVED
APR 11 2018
AS A BASIS FOR PREPARATION OF DETAILED PLANS

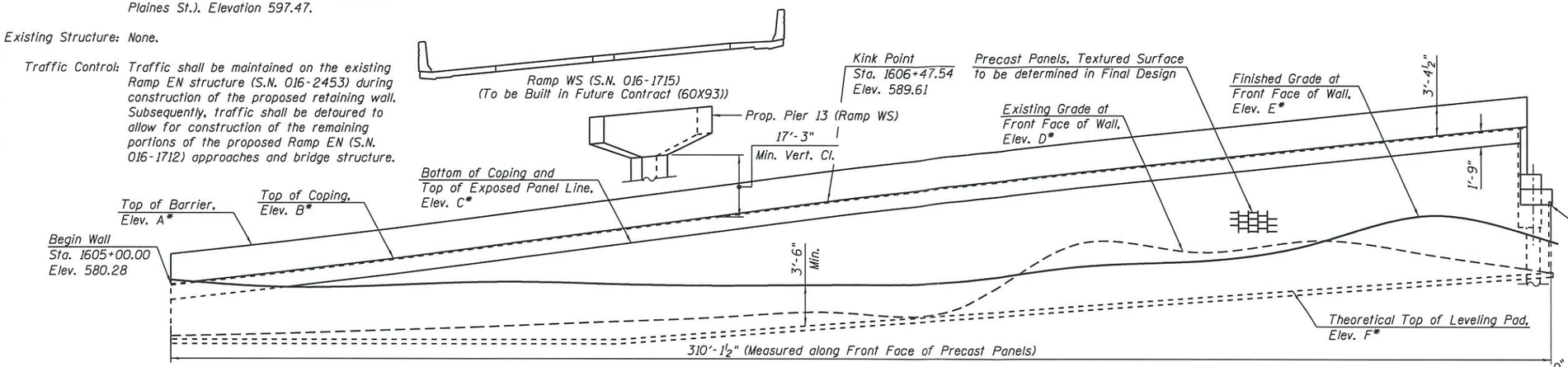

*For Elevations, See Table 1 - Wall Elevations on Sheet 3 of 3

PARTIAL UNFOLDED ELEVATION

(Looking at Front Face of Wall)
(See Note 1)

LEGEND:

Soil Boring		Exist. Electric	—E—E—
Exist. Catch Basin		Exist. Storm Sewer	
Prop. Manhole		Prop. Storm Sewer	
Prop. Catch Basin		Exist. Telephone	—T—T—
		Limits of Soil Reinforcement	

NOTES:

1. For remaining portions of Unfolded Elevation and Highway Classification Data, see Sheet 2.
2. For Table 1 - Wall Elevations, Profile Grade Lines and Curve Data, see Sheet 3.
3. Stations and offsets are measured along ℄ Ramp EN to the front face of precast panels.

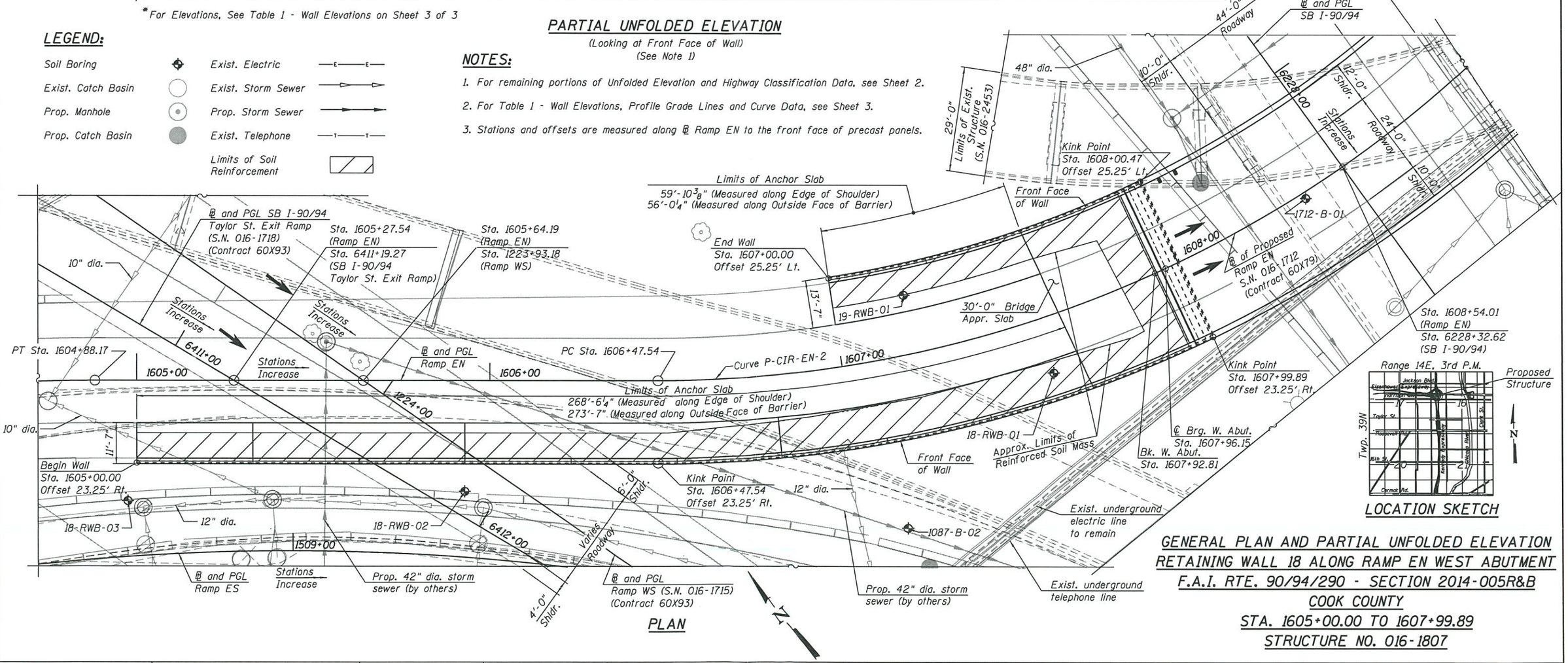

PLAN

LOCATION SKETCH

GENERAL PLAN AND PARTIAL UNFOLDED ELEVATION
RETAINING WALL 18 ALONG RAMP EN WEST ABUTMENT
F.A.I. RTE. 90/94/290 - SECTION 2014-005R&B
COOK COUNTY
STA. 1605+00.00 TO 1607+99.89
STRUCTURE NO. 016-1807

HBM ENGINEERING GROUP, LLC.
CONSULTING & DESIGN INSPECTION & RATING RESEARCH & TESTING
4415 WEST HARRISON ST. SUITE 231
HILLSIDE, IL 60162
PHONE: (708) 236-0900
FAX: (708) 236-0901

USER NAME = will.mardauss	DESIGNED - MI, JJS	REVISED -
	DRAWN - SK	REVISED -
PLOT SCALE = 28.00 ' / in.	CHECKED - MAI, MI	REVISED -
PLOT DATE = 3/24/2018	DATE - 03/23/2018	REVISED -

STATE OF ILLINOIS
DEPARTMENT OF TRANSPORTATION

STRUCTURE NO. 016-1807

SCALE: | SHEET 1 OF 3 SHEETS | STA. | TO STA.

F.A.I. RTE.	SECTION	COUNTY	TOTAL SHEETS	SHEET NO.
90/94/290	2014-005R&B	COOK	3	1

CONTRACT NO. 60X79

ILLINOIS FED. AID PROJECT

FILE PATH = pw:\\61/7479-PWINT.descomonline.local:DECOM_DS02_MA\Documents\01 Americas\Transportation\68269938 Circle\Phase_I\000_CADD\005.Structure\Retaining Wall 18\Sheets\0161807-68279-SB1-TSL-001

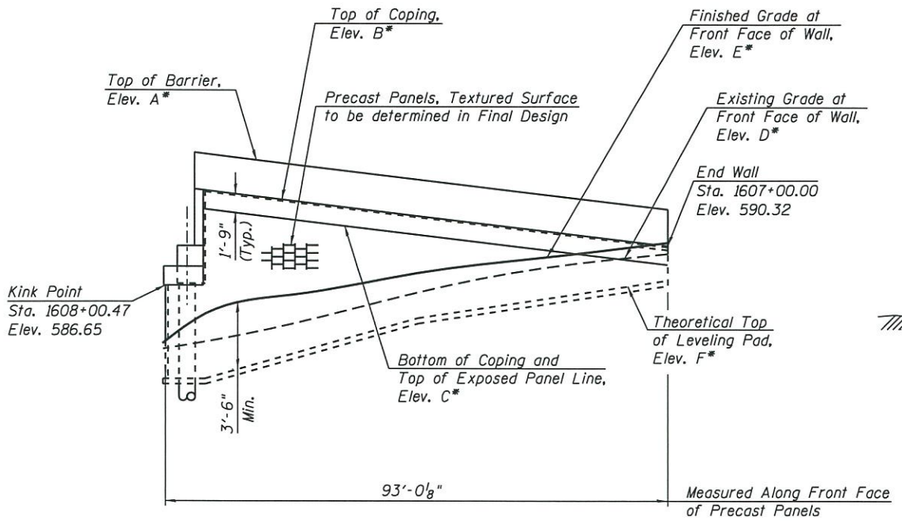

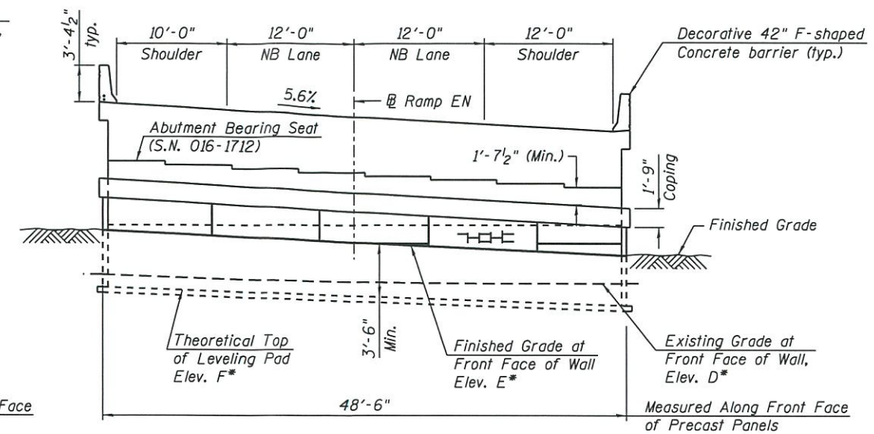

PARTIAL UNFOLDED ELEVATION

(Looking at Front Face of Wall)

HIGHWAY CLASSIFICATION

Ramp EN
Functional Class: Interstate
ADT: 26,600 (2012); 31,000 (2040)
ADTT: 1,032 (2012); 1,203 (2040)
DHV: 1,910 (2040)
Design Speed: 30 m.p.h.
Posted Speed: 30 m.p.h.
One-Way Traffic
Directional Distribution: 100%

I-90/94 SB at Van Buren
Functional Class: Interstate
ADT: 100,100 (2012); 98,000 (2040)
ADTT: 11,351 (2012); 11,113 (2040)
DHV: 6,340 (2040)
Design Speed: 60 m.p.h.
Posted Speed: 45 m.p.h.
One-Way Traffic
Directional Distribution: 100%

APPROVED

APR 11 2018

AS A BASIS FOR PREPARATION OF DETAILED PLANS

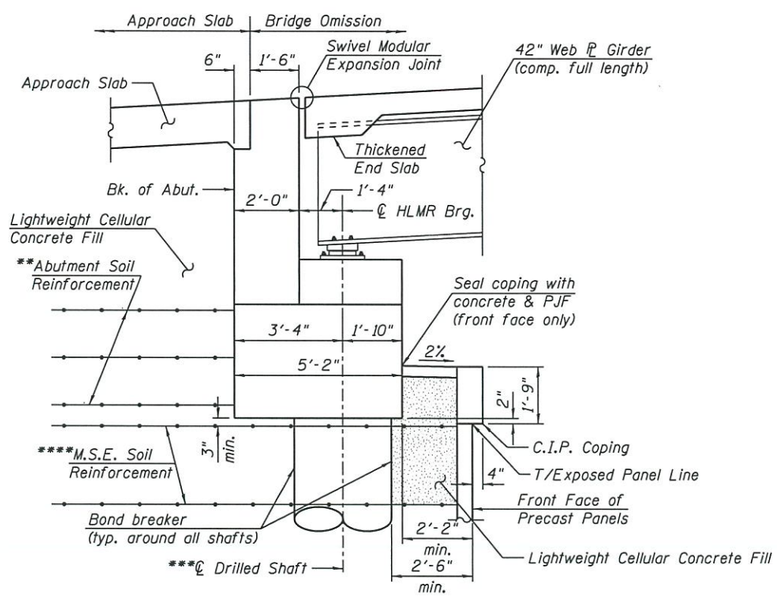

SECTION THRU WEST ABUTMENT

(Horiz. Dims. @ Rt. L's to ℄ Brg.)

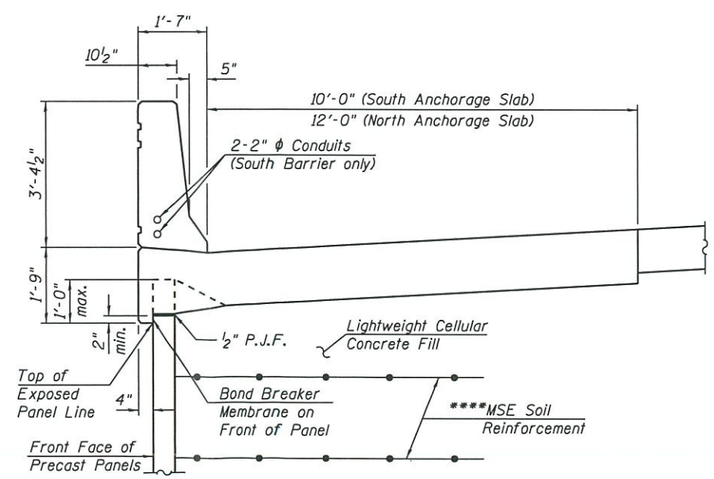

SECTION THROUGH BARRIER AND ANCHORAGE SLAB

NOTES:

1. All Lightweight Cellular Concrete Fill shall be Class III.
2. For Table 1 - Wall Elevations, see Sheet 3.
3. For additional Notes, see Sheet 1.

* For Elevations, see Table 1 - Wall Elevations on Sheet 3 of 3.

** Abutment soil reinforcement to resist lateral loads in lieu of drilled shafts.

*** Size, spacing, depth and number as required by design.

**** The MSE Wall supplier's internal stability design shall account for the anchorage slab's bearing pressure surcharge of 1 ksf and horizontal sliding force of 0.83 kips/ft of wall.

PARTIAL UNFOLDED ELEVATIONS AND SECTIONS
RETAINING WALL 18 ALONG RAMP EN WEST ABUTMENT
F.A.I. RTE. 90/94/290 - SECTION 2014-005R&B
COOK COUNTY
STA. 1605+00.00 TO 1607+99.89
STRUCTURE NO. 016-1807

HBM ENGINEERING GROUP, LLC.
CONSULTING & DESIGN
INSPECTION & RATING
RESEARCH & TESTING
4415 WEST HARRISON ST.
SUITE 231
HILLSIDE, IL 60162
PHONE: (708) 236-0900
FAX: (708) 236-0901

USER NAME = will.mardauss	DESIGNED - MI, JJS	REVISED -	
	DRAWN - SK	REVISED -	
PLOT SCALE = 28.00 ' / in.	CHECKED - MAI, MI	REVISED -	
PLOT DATE = 3/24/2018	DATE - 03/23/2018	REVISED -	

STATE OF ILLINOIS
DEPARTMENT OF TRANSPORTATION

STRUCTURE NO. 016-1807

SCALE: | SHEET 2 OF 3 SHEETS | STA. | TO STA.

F.A.I. RTE.	SECTION	COUNTY	TOTAL SHEETS	SHEET NO.
90/94/290	2014-005R&B	COOK	3	2
		CONTRACT NO. 60X79		
	ILLINOIS FED. AID PROJECT			

FILE PATH = pw:\\617479-PW|NT.aecomonline.local:AECOM_DS02_NA\Documents\01 Americas\Transportation\60269938 Circle\Phase_I\000_CAD\000_Structural\Resaming\Rail_18\Sheet\016|807-60X79-S00-TSL-002

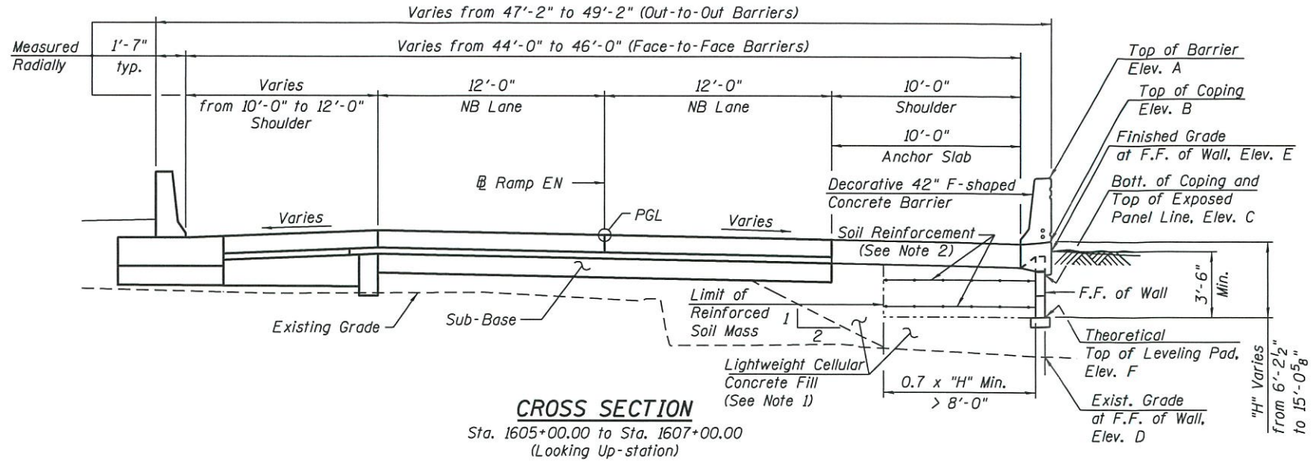

CROSS SECTION

Sta. 1605+00.00 to Sta. 1607+00.00
(Looking Up-station)

TABLE 1 - WALL ELEVATIONS

Station	Offset	Elevation A	Elevation B	Elevation C	Elevation D	Elevation E	Elevation F
1605+00.00	23.25 RT.	583.66	580.29	578.54	574.47	580.77	574.08
1605+25.00	23.25 RT.	585.05	581.68	579.93	574.75	579.98	574.08
1605+50.00	23.25 RT.	586.56	583.19	581.44	575.16	580.20	574.08
1605+75.00	23.25 RT.	588.19	584.82	583.07	575.60	580.57	574.08
1606+00.00	23.25 RT.	589.85	586.48	584.73	576.12	580.32	574.08
1606+25.00	23.25 RT.	591.50	588.13	586.38	576.65	580.17	574.99
1606+50.00	23.25 RT.	593.15	589.78	588.03	577.13	580.23	575.90
1606+75.00	23.25 RT.	594.81	591.44	589.69	577.60	580.60	576.88
1607+00.00	23.25 RT.	596.27	592.90	591.15	584.83	582.29	577.84
1607+25.00	23.25 RT.	597.65	594.28	592.53	583.96	582.93	578.82
1607+50.00	23.25 RT.	599.04	595.67	593.92	585.25	584.90	579.79
1607+75.00	23.25 RT.	600.43	597.06	595.31	583.61	588.10	580.76
1607+99.89	23.25 RT.	-	-	-	-	-	-
1608+00.47	25.25 LT.	-	-	-	-	-	-
1607+75.00	25.25 LT.	597.85	594.48	592.73	583.09	585.78	580.31
1607+50.00	25.25 LT.	596.46	593.09	591.34	586.00	587.81	583.62
1607+25.00	25.25 LT.	595.08	591.71	589.96	588.25	589.22	585.36
1607+00.00	25.25 LT.	593.69	590.32	588.57	589.57	590.60	587.10

Elevation A - Top of Barrier
Elevation B - Top of Coping
Elevation C - Bottom of Coping/Top of Exposed Panel Line
Elevation D - Exist. Grade at Front Face of Wall
Elevation E - Finished Grade at Front Face of Wall
Elevation F - Theoretical Top of Leveling Pad

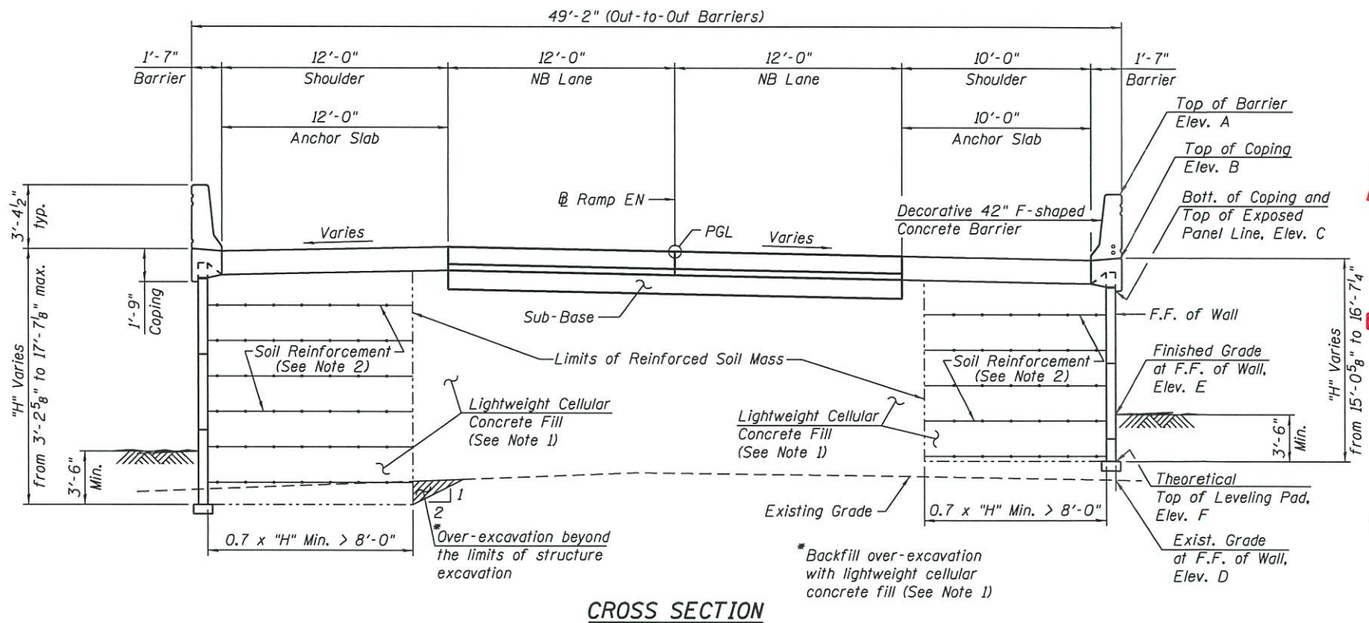

CROSS SECTION

Sta. 1607+00.00 to Sta. 1608+00.47
(Looking Up-station)

APPROVED
APR 11 2018
AS A BASIS FOR PREPARATION OF DETAILED PLANS

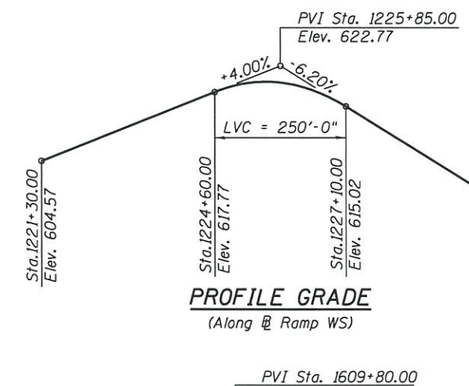

PROFILE GRADE

(Along ℄ Ramp WS)

CURVE DATA

(RAMP EN)
(PROP. CURVE P-CIR-EN-2)
PI STA. = 1624+41.43
Δ = 158° 32' 09" (LT)
D = 16° 51' 06"
R = 340.00'
T = 1,793.89'
L = 940.77'
E = 1,485.82'
e = 5.60%
T.R. = 36'
S.E. RUN = 102'
P.C. STA. = 1606+47.54
P.T. STA. = 1615+88.31
DS = 30
PS = 30

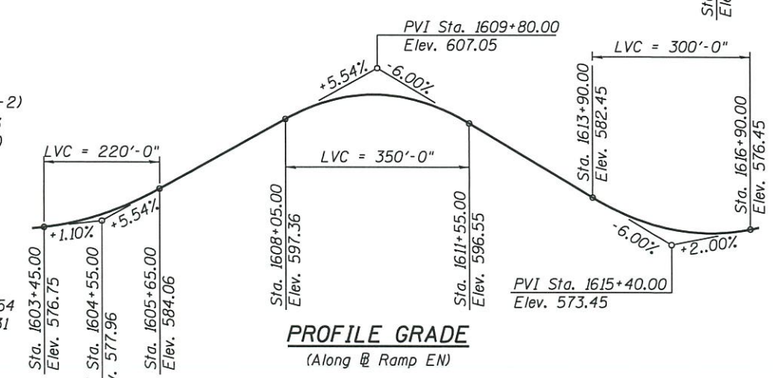

PROFILE GRADE

(Along ℄ Ramp EN)

CURVE DATA

(SB I-90/94)
(PROP. CURVE P-KDR-SB-4)
PI STA. = 6231+84.46
Δ = 13° 18' 21" (LT)
D = 2° 44' 34"
R = 2,089.00'
T = 243.66'
L = 485.13'
E = 14.16'
e = 4.40%
T.R. = NA
S.E. RUN = 164'
P.C. STA. = 6229+40.80
P.T. STA. = 6234+25.93
DS = 60
PS = 45

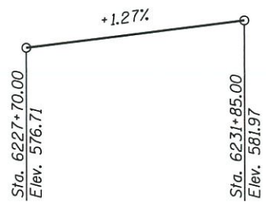

PROFILE GRADE

(Along ℄ SB I-90/94)

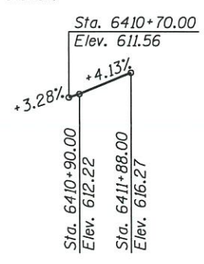

PROFILE GRADE

(Along ℄ SB Taylor St. Exit Ramp)

NOTES:

1. All lightweight cellular concrete fill shall be Class III.
2. The MSE wall supplier's internal stability design shall account for the anchorage slab's bearing pressure surcharge of 1.0 ksf and horizontal sliding force of 0.83 kips/ft. of wall.
3. F.F. denotes Front Face.
4. The minimum factored bearing resistance for fill material, at locations where the proposed theoretical leveling pad is above the existing ground line, shall equal or exceed 2,100 psf.
5. For additional notes, see Sheet 1.

SECTIONS
RETAINING WALL 18 ALONG RAMP EN WEST ABUTMENT
F.A.I. RTE. 90/94/290 - SECTION 2014-005R&B
COOK COUNTY
STA. 1605+00.00 TO STA. 1607+99.89
STRUCTURE NO. 016-1807

FILE PATH = pw:\\61747q-PWINT.aecomcinw.local:AECOM.DS02.NA\Documents\01 Americas\Transportation\60269938 Circle\Phase.1\009.CAD\009.Structural\Retaining\Wall.18\Sheet\016\007-60X79-SBD-TSL-003

HBM ENGINEERING GROUP, LLC. CONSULTING & DESIGN INSPECTION & RATING RESEARCH & TESTING
4415 WEST HARRISON ST. SUITE 231 HILLSIDE, IL 60162 PHONE: (708) 236-0900 FAX: (708) 236-0901

USER NAME = will.mardauss	DESIGNED - MI, JJS	REVISED -	
	DRAWN - SK	REVISED -	
PLOT SCALE = 8:0.0000 ':' / in.	CHECKED - MAI, MI	REVISED -	
PLOT DATE = 3/24/2018	DATE - 03/23/2018	REVISED -	

STATE OF ILLINOIS
DEPARTMENT OF TRANSPORTATION

STRUCTURE NO. 016-1807
SCALE: SHEET 3 OF 3 SHEETS STA. TO STA.

F.A.I. RTE.	SECTION	COUNTY	TOTAL SHEETS	SHEET NO.
90/94/290	2014-005R&B	COOK	3	3
		CONTRACT NO. 60X79		
		ILLINOIS FED. AID PROJECT		