Bench Mark: Chisel "X" on chain bolt of fire hydrant in front of 555 W. Harrison St. Elev. 594.46.

Existing Structure: SN 016-2452. Constructed in 1960 under F.A.I. Route 1, Section 2424.28-B. Fourteen span bridge that measures 787'-4" from back of north abutment to centerline of east pier. Out-to-out width of 29'-0". The spans are supported by 36" wide flange beams, concrete T-beams and a reinforced concrete slab. Substructure is reinforced concrete closed abutment, multi-column and solid wall piers founded on bell caissons. The existing bridge is to be removed and replaced.

The existing bridge will be closed and traffic will be detoured during construction. Traffic on I-290 and I-90/94 will be maintained with stage construction.

No Salvage.

NOTES:

1. Wall offsets are measured from the ℄ of Ramp SE to the front face of precast panels.
2. F.F. denotes Front Face.
3. B.F. denotes Back Face.
4. Aggregate columns must be spaced to avoid interference with existing utilities to remain, proposed utilities to be installed, and proposed abutment foundation.

HIGHWAY CLASSIFICATION

Ramp SE	Ramp NW
Functional Class: Interstate	Functional Class: Interstate
ADT: 4,600 (2010); 5,000 (2040)	ADT: 32,500 (2012); 39,000 (2040)
ADTT: 123 (2012); 134 (2040)	ADTT: 2,600 (2012); 2,730 (2040)
DHV: 440 (2040)	DHV: 2,790 (2040)
Design Speed: 25 m.p.h.	Design Speed: 35 m.p.h.
Posted Speed: 25 m.p.h.	Posted Speed: 35 m.p.h.
One-Way Traffic	One-Way Traffic
Directional Distribution: 100%	Directional Distribution: 100%

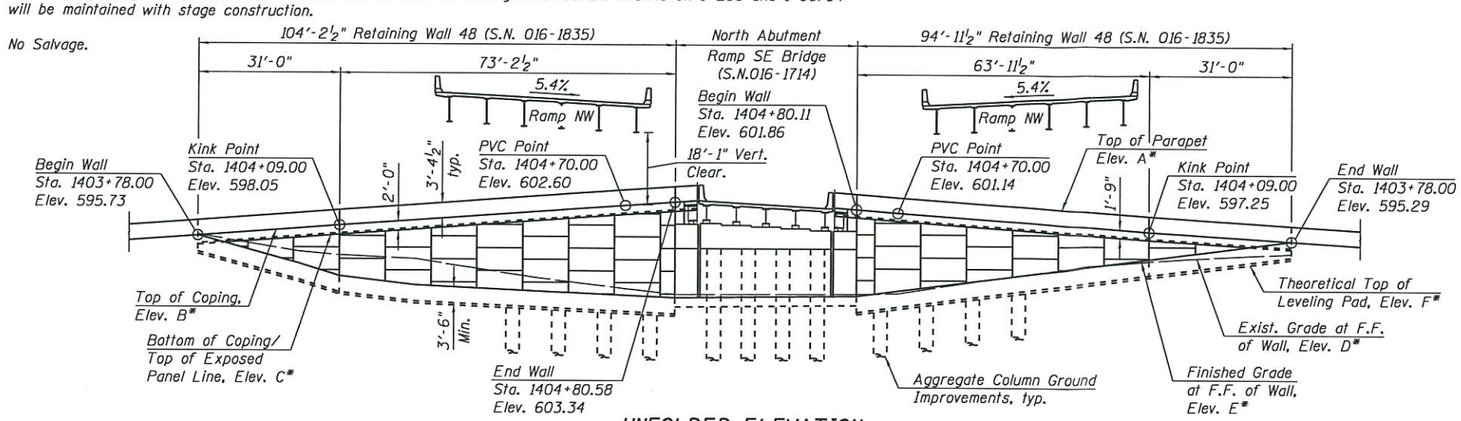

* For elevations, see Table 1 on Sheet 2 of 3.

UNFOLDED ELEVATION

(Looking at F.F. of Wall)

CURVE DATA

(Ramp SE)

P-CIR-SE-2
P.I. Sta. = 1415+83.08
Δ = 157°44'18" (LT)
D = 24°48'12"
R = 231.00'
T = 1174.08'
L = 635.96'
E = 965.59'
e = 5.6%
T.R. = NA
S.E. Run = 128'
P.C. Sta. = 1404+09.00
P.T. Sta. = 1410+44.95

DESIGN SPECIFICATIONS

2014 AASHTO LRFD Bridge Design Specifications 7th Edition with 2015 and 2016 Interim Specifications

DESIGN STRESSES

FIELD UNITS

f'c = 3,500 psi
fy = 60,000 psi (Reinforcement)

PRECAST UNITS

f'c = 4,500 psi

CURVE DATA

(Ramp NW)

P-CIR-NW-6
P.I. Sta. = 1831+44.22
Δ = 88°30'25" (LT)
D = 10°36'37"
R = 540.00'
T = 526.11'
L = 834.16'
E = 213.92'
e = 5.4%
T.R. = NA
S.E. Run = 66'
P.C. Sta. = 1826+18.11
P.T. Sta. = 1834+52.27

LEGEND

- Electric
- Exist. Storm Sewer
- Light Pole
- Soil Boring
- Limits of Soil Reinforcement
- Limits of Soil Reinforcement With Ground Improvements

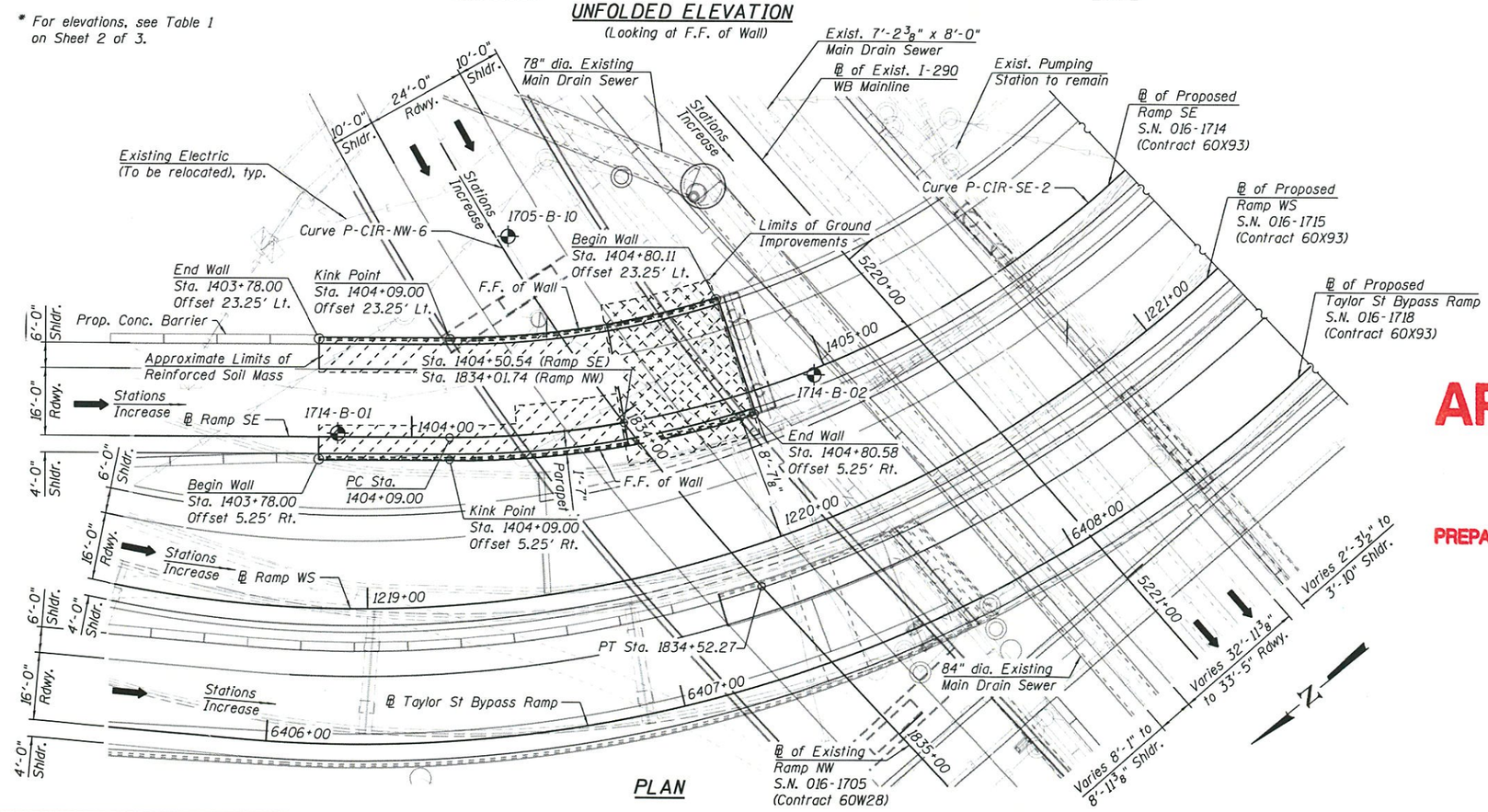

PLAN

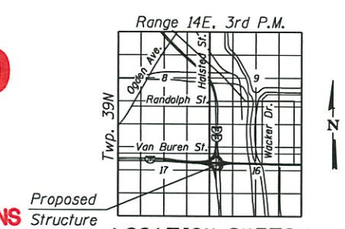

LOCATION SKETCH

APPROVED

JAN 23 2018

AS A BASIS FOR PREPARATION OF DETAILED PLANS

GENERAL PLAN
RETAINING WALL 48 ALONG RAMP SE
F.A.I. 94 (I-90/94 SB TO I-290 EB)
SECTION 2014-013 R&B-R
COOK COUNTY
STATION 1403+78.00 TO STATION 1404+80.58
STRUCTURE NO. 016-1835

TranSystems

USER NAME = jrmickens	DESIGNED - WJC	REVISED -	
	CHECKED - MDS/JNP	REVISED -	
PLOT SCALE = 32.00 ' / in.	DRAWN - WJC	REVISED -	
PLOT DATE = 12/29/2017	CHECKED - MDS/JNP	REVISED -	

STATE OF ILLINOIS
DEPARTMENT OF TRANSPORTATION

SHEET NO. 1 OF 3 SHEETS

F.A.I. RTE.	SECTION	COUNTY	TOTAL SHEETS	SHEET NO.
90/94/290	2014-013 R&B-R	COOK	3	1
		CONTRACT NO. 60X93		
		ILLINOIS FED. AID PROJECT		

10:46:33 AEPW:\\617479-PWINT.AECOMONLINE.LOCAL.AECOM.DS02.NA\DOCUMENTS\01 AMERICAS\TRANSPORTATION\60269938 CIRCLE\PHASE_II\000_CAD\009_STRUCTURAL\STRUCTURE_016-1835\TSL\SHEETS\016-1835-60X93-SHT-TSL-001

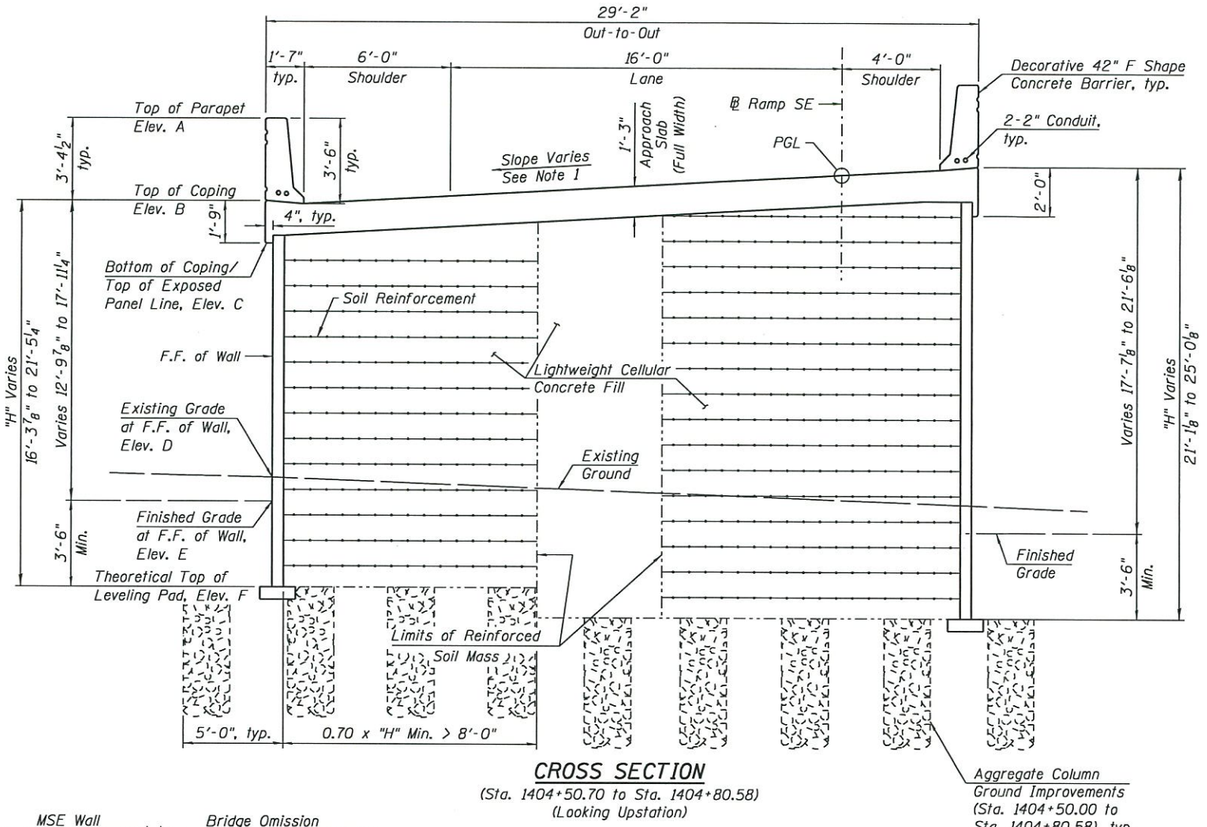

CROSS SECTION

(Sta. 1404+50.70 to Sta. 1404+80.58)
(Looking Upstation)

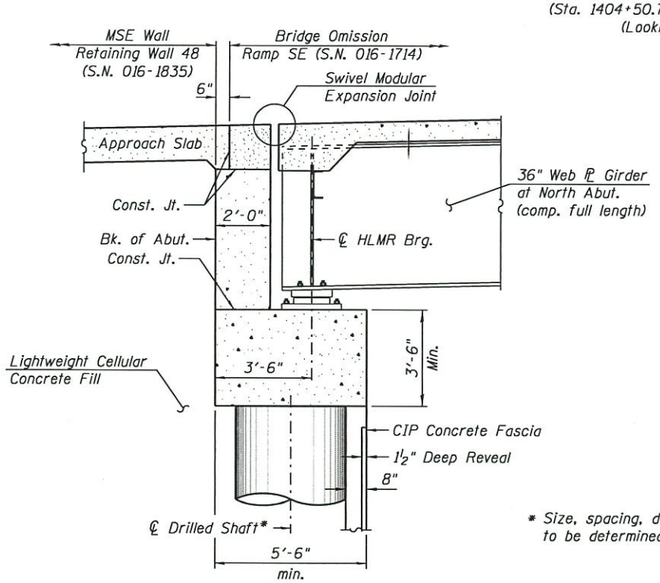

* Size, spacing, depth, and number to be determined in design.

SECTION THRU ABUTMENT

(Horiz. Dim. @ Rt. L's)

TABLE 1 - WALL ELEVATIONS

Station	Offset	Elevation A	Elevation B	Elevation C	Elevation D	Elevation E	Elevation F
1403+78.00	5.25' Rt.	599.10	595.73	593.73	595.97	595.73	592.23
1404+00.00	5.25' Rt.	600.75	597.37	595.37	592.35	589.77	586.27
1404+09.00	5.25' Rt.	601.42	598.05	596.05	591.55	587.04	583.54
1404+25.00	5.25' Rt.	602.62	599.24	597.24	590.82	585.06	581.56
1404+50.70	5.25' Rt.	604.54	601.16	599.16	586.80	583.57	580.07
1404+70.00	5.25' Rt.	605.97	602.60	600.60	584.47	582.44	578.94
1404+80.58	5.25' Rt.	606.72	603.34	601.34	583.24	581.83	578.33
1404+80.11	23.25' Lt.	605.23	601.86	600.11	583.42	583.92	580.42
1404+70.00	23.25' Lt.	604.52	601.14	599.39	583.61	585.01	581.51
1404+50.70	23.25' Lt.	603.28	599.90	598.15	586.35	587.08	583.58
1404+25.00	23.25' Lt.	601.65	598.27	596.52	589.64	589.85	586.35
1404+09.00	23.25' Lt.	600.63	597.25	595.50	590.82	591.64	588.14
1404+00.00	23.25' Lt.	600.06	596.68	594.93	591.47	592.64	589.14
1403+78.00	23.25' Lt.	598.66	595.29	593.54	592.59	595.29	591.79

Elevation A- Top of Parapet
Elevation B- Top of Coping
Elevation C- Bottom of Coping / Top of Exposed Panel Line
Elevation D- Existing Grade at F.F. of Wall
Elevation E- Finished Grade at F.F. of Wall
Elevation F- Theoretical Top of Leveling Pad

NOTES:

1. Direction of slope referenced from right edge of pavement.
   Slope Transition (0.00% to -5.60%) Sta. 1403+38.82 to Sta. 1404+68.00
   Constant Cross Slope (-5.60%) Sta. 1404+68.00 to Sta. 1409+90.00

APPROVED
JAN 23 2018
AS A BASIS FOR
PREPARATION OF DETAILED PLANS

CROSS SECTION & DETAILS I
RETAINING WALL 48 ALONG RAMP SE
F.A.I. 94 (I-90/94 SB TO I-290 EB)
SECTION 2014-013 R&B-R
COOK COUNTY
STATION 1403+78.00 TO STATION 1404+80.58
STRUCTURE NO. 016-1835

TranSystems

USER NAME = jrmickens	DESIGNED - WJC	REVISED -	
	CHECKED - MDS/JNP	REVISED -	
PLOT SCALE = 6.0000 '/ in.	DRAWN - WJC	REVISED -	
PLOT DATE = 12/29/2017	CHECKED - MDS/JNP	REVISED -	

STATE OF ILLINOIS
DEPARTMENT OF TRANSPORTATION

SHEET NO. 2 OF 3 SHEETS

F.A.I. RTE.	SECTION	COUNTY	TOTAL SHEETS	SHEET NO.
90/94/290	2014-013 R&B-R	COOK	3	2
		CONTRACT NO. 60X93		
		ILLINOIS FED. AID PROJECT		

10:50:13 AKPW:\617479-PWINT:AECOMONLINE:LOCAL\AECOM_DS02_NA\DOCUMENTS\01 AMERICAS\TRANSPORTATION\60269938 CIRCLE\PHASE_II\000_CAD\008_STRUCTURAL\STRUCTURE_016-1835\TSL\SHEETS\016I835-60X93-SHT-TSL-002

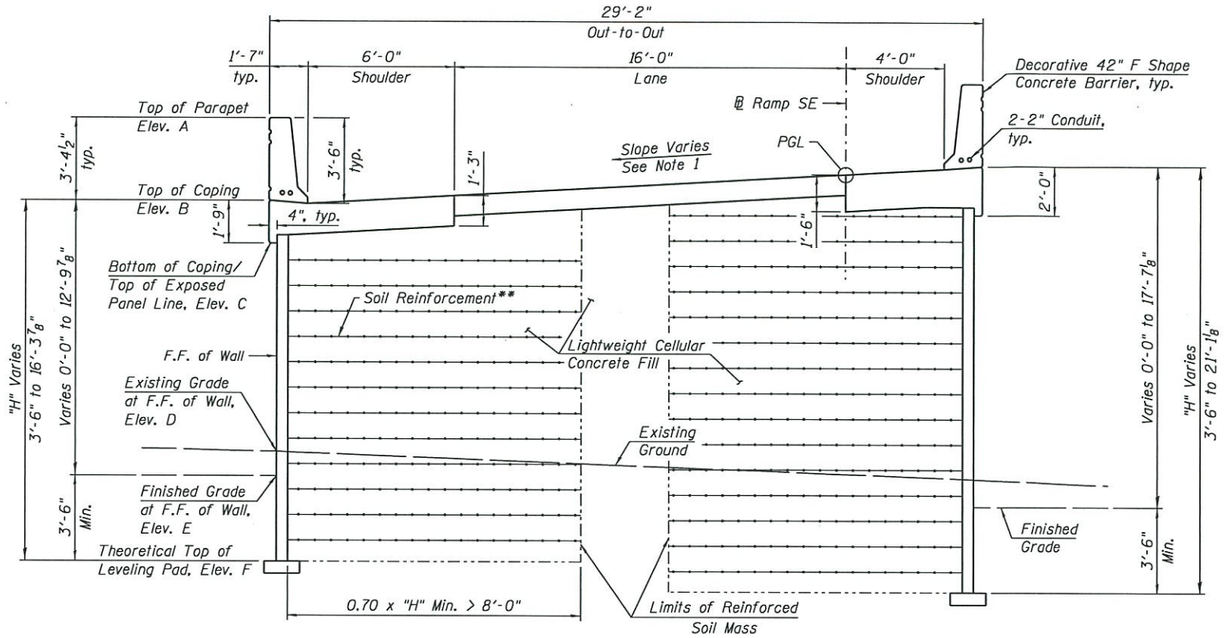

CROSS SECTION

(Sta. 1403+78.00 to Sta. 1404+50.70)
(Looking Upstation)

** The M.S.E. Wall supplier's internal stability design shall account for the anchorage slab's bearing pressure surcharge of 1.0 ksf and horizontal sliding force of 0.50 kips/ft of wall.

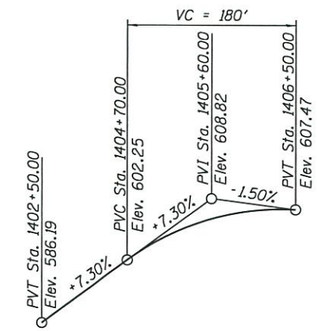

PROFILE GRADE

(Along ℄ Ramp SE)

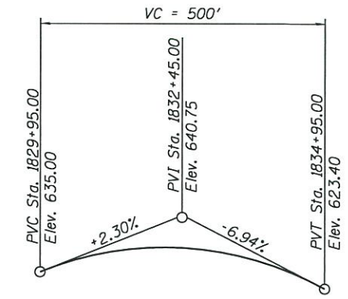

PROFILE GRADE

(Along ℄ Ramp NW)

APPROVED

JAN 23 2018

AS A BASIS FOR
PREPARATION OF DETAILED PLANS

NOTES:

1. Direction of slope referenced from right edge of pavement.
   Slope Transition (0.00% to -5.60%) Sta. 1403+38.82 to Sta. 1404+68.00
   Constant Cross Slope (-5.60%) Sta. 1404+68.00 to Sta. 1409+90.00

CROSS SECTION & DETAILS II
RETAINING WALL 48 ALONG RAMP SE
F.A.I. 94 (I-90/94 SB TO I-290 EB)
SECTION 2014-013 R&B-R
COOK COUNTY
STATION 1403+78.00 TO STATION 1404+80.58
STRUCTURE NO. 016-1835

TranSystems

USER NAME = jrmickens	DESIGNED - WJC	REVISED -	
	CHECKED - MDS/JNP	REVISED -	
PLOT SCALE = 6.0000 '/ in.	DRAWN - WJC	REVISED -	
PLOT DATE = 12/29/2017	CHECKED - MDS/JNP	REVISED -	

STATE OF ILLINOIS
DEPARTMENT OF TRANSPORTATION

SHEET NO. 3 OF 3 SHEETS

F.A.I. RTE.	SECTION	COUNTY	TOTAL SHEETS	SHEET NO.
90/94/290	2014-013 R&B-R	COOK	3	3
		CONTRACT NO. 60X93		
		ILLINOIS FED. AID PROJECT		

10:45:52 AMP\\:\617479-PWINT.AECOMONLINE.LOCAL:AECOM_DS02_NA\DOCUMENTS\01 AMERICAS\TRANSPORTATION\60269938 CIRCLE\PHASE_II\000_CAD\008_STRUCTURAL\STRUCTURE_016-1835\TSL\SHEETS\016183S-60X93-SHT-TSL-003