Benchmark 252: Chiseled square on S.E. wingwall of Structure No. 018-0057, Sta. 453+70 18' Lt, Elev. 567.34

Existing Structure: S.N. 018-0057 Built in 1981 as F.A.P. Route 828, Section 12BR-1. The existing structure is a 3 span PPC deck beam superstructure with open pile bent abutments and solid wall encased pile bent piers supported on steel H-piles. Back-to-Back abutment length is 108'-11" and out-to-out width of deck is 36'-0". The superstructure is to be removed and replaced. Stage construction will be utilized to maintain traffic.

Salvage: None

* Slab thickness may be refined in final design

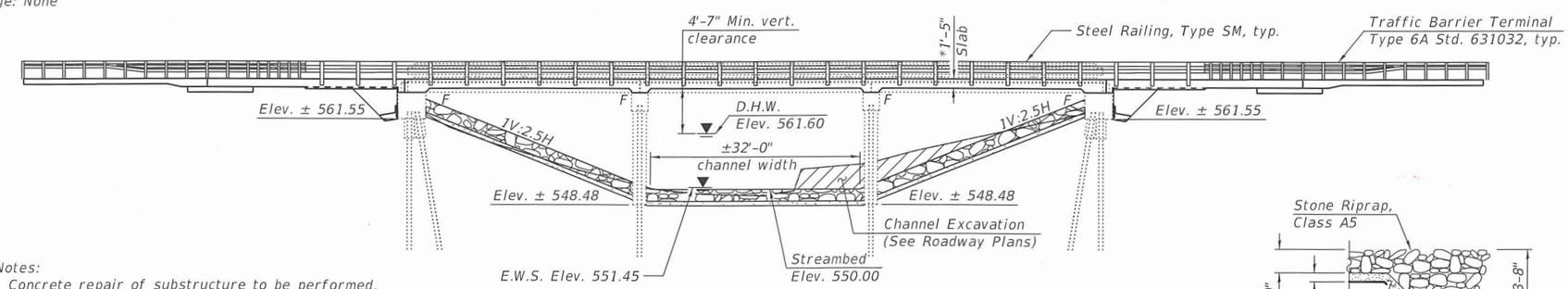

ELEVATION

Notes:
Concrete repair of substructure to be performed.
The condition of the existing deck beams for the duration of Stage I Traffic should be verified during final design. If the condition changes, the proposed staging sequence shall be re-evaluated. If a beam replacement, or a beam support contract is required, the designer shall provide the necessary plans.

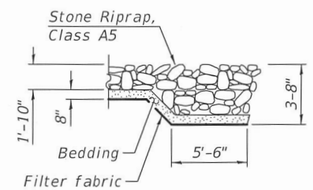

SECTION A-A

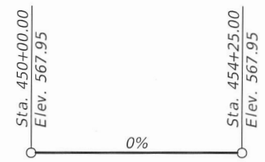

PROFILE GRADE
(along ℄ Montrose Rd.)

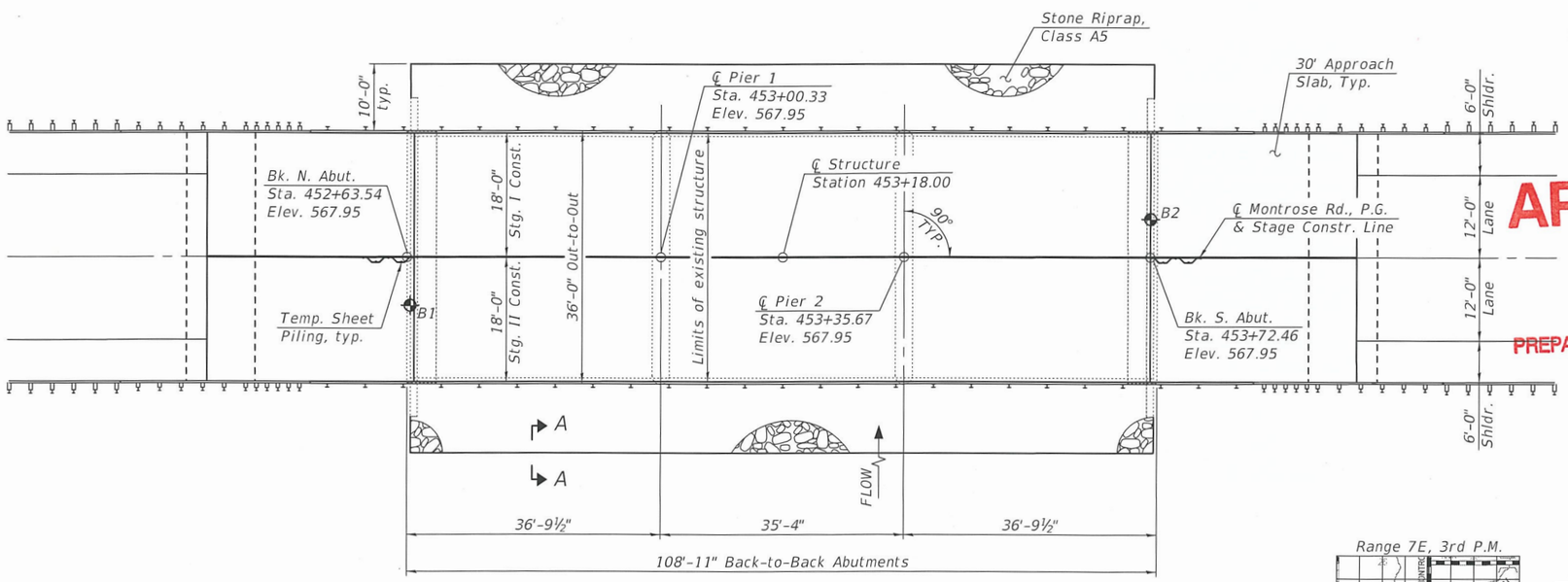

PLAN

APPROVED
JAN 8 2019
AS A BASIS FOR PREPARATION OF DETAILED PLANS

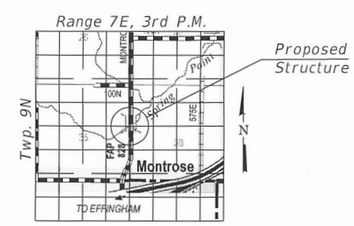

LOCATION SKETCH

SEISMIC DATA

Seismic Performance Category (SPC) = A
Horizontal Bedrock Acceleration Coeffiecient = 0.069g
Site Coefficient = 1.0
(Standard Bridge Importance)

LOADING HL-93

Allow 50#/sq. ft. for future wearing surface.

DESIGN STRESSES

NEW CONSTRUCTION

f'c = 3,500 psi
f'c = 5,000 psi (Superstructure concrete)
fy = 60,000 psi (Reinforcement)

EXISTING CONSTRUCTION

f'c = 1,400 psi
fy = 24,000 psi (Reinforcement)

DESIGN SPECIFICATIONS

2017 AASHTO LRFD Bridge Design Specifications, 8th Edition
1995 Seismic Retrofitting Manual for Highway Bridges

HIGHWAY CLASSIFICATION

F.A.P. Rte. 828 - Montrose Rd.
Functional Class: Minor Arterial
ADT: 2,250 (2019); 2,800 (2039)
ADTT: 497 (2019); 619 (2039)
DHV: 236
Design Speed: 60 m.p.h.
Posted Speed: 55 m.p.h.
Two-Way Traffic
Directional Distribution: 51:49

GENERAL PLAN & ELEVATION
MONTROSE RD. OVER SPRING POINT CREEK
F.A.P. 828 - SEC. (12BR-1)BR
CUMBERLAND COUNTY
STA. 453+18.00
STRUCTURE NO. 018-0057

DESIGNED -	ALLY D. KELLEY
CHECKED -	ANDREW BAUER
DRAWN -	JACQUES ELLOYE
CHECKED -	RICHARD J. CHAPUT

1/4/2019 - 11:33:50 AM

STATE OF ILLINOIS
DEPARTMENT OF TRANSPORTATION

SHEET 1 OF 2 SHEETS

F.A.P. RTE.	SECTION	COUNTY	TOTAL SHEETS	SHEET NO.
828	(12BR-1)BR	CUMBERLAND		
		CONTRACT NO. 74325		
		ILLINOIS FED. AID PROJECT		

MODEL: 0180057-74325-TSL-001
FILE NAME: pw:\\IL084EBIDINTEG.illinois.gov:PWIDOT\Documents\IDOT Offices\Bureau of Bridges and Structures\Projects\0180057\CADD Plans\0180057-74325.dgn

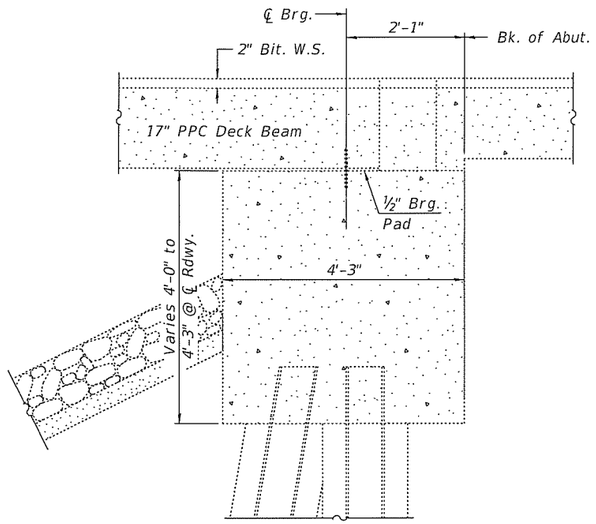

EXISTING SECTION THRU ABUTMENT

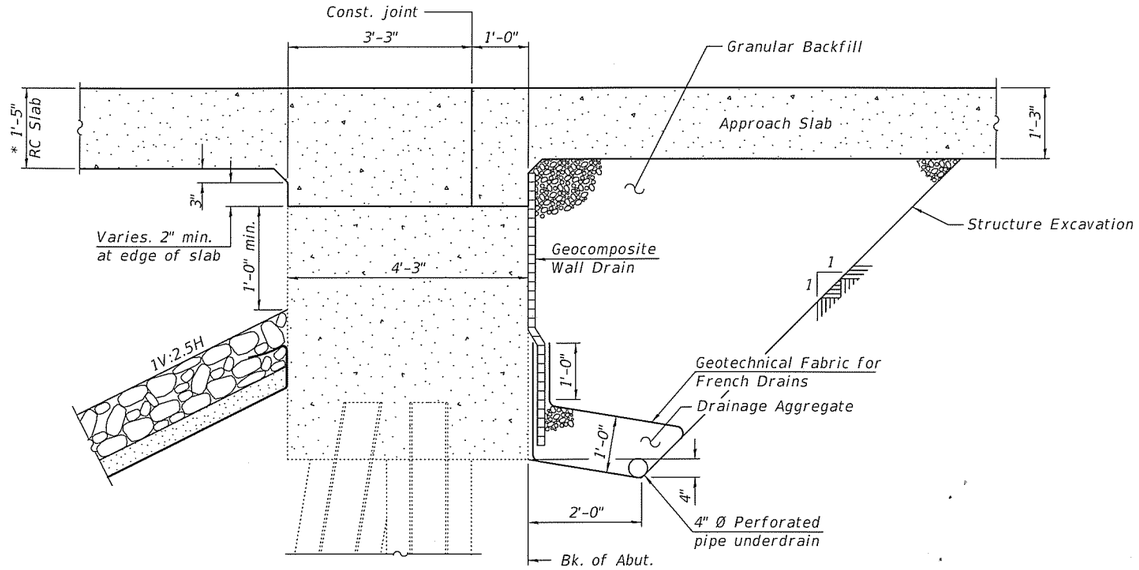

PROPOSED SECTION THRU ABUTMENT

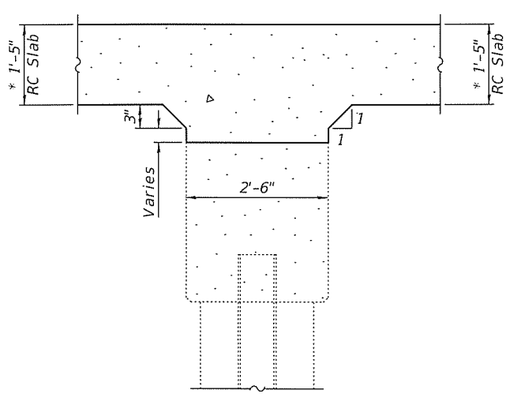

SECTION THRU PIER

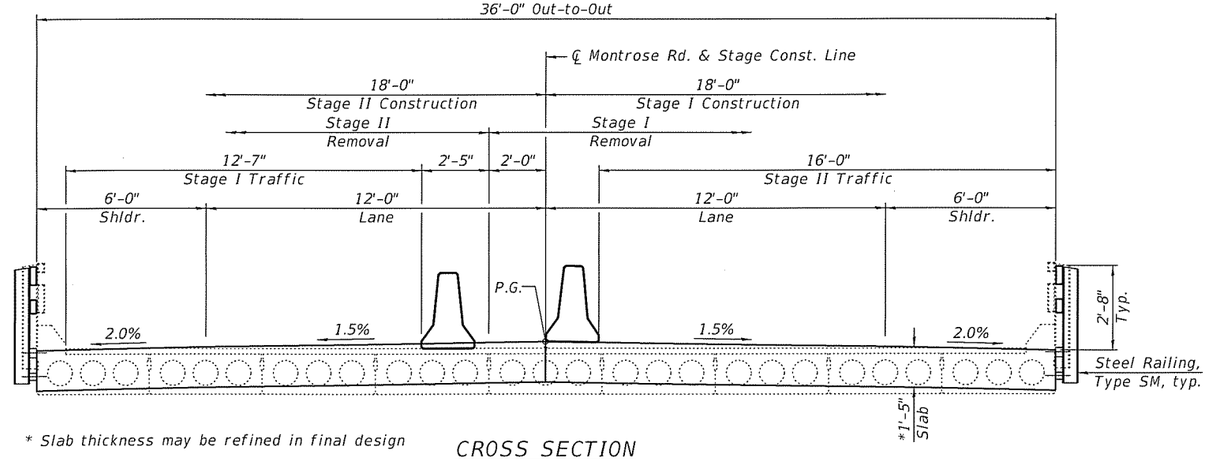

* Slab thickness may be refined in final design

CROSS SECTION
(Looking North)

DESIGN SCOUR ELEVATION TABLE

Event / Limit State	Design Scour Elevations (ft.)				
	S. Abut.	Pier 1	Pier 2	N. Abut.	Item 113
Q100	561.6	539.9	539.9	561.6	5
Q200	561.6	539.0	539.0	561.6	
Design	561.6	539.9	539.9	561.6	

WATERWAY INFORMATION

Drainage Area = 15.8 sq. mi.

Existing Overtoping Elev. = 567.6@ Sta. 452+50
Propsed Overtoping Elev. = 567.95@ Sta. 452+50

Flood	Freq. Yr.	Q C.F.S.	Opening Ft² Exist.	Opening Ft² Prop.	Natural H.W.E.	Head - Ft. Exist.	Head - Ft. Prop.	Headwater El. Exist.	Headwater El. Prop.
	10	2670	510	530	560.51	1.24	1.23	561.75	561.74
Design	50	4270	600	620	561.60	1.74	1.73	563.34	563.33
Base	100	4990	630	650	562.00	2.01	1.98	564.01	563.98
Scour Design Check	200	5710	670	690	562.38	2.26	2.23	564.64	564.61
Max. Calc.	500	6750	710	730	562.88	2.61	2.59	565.49	565.47

10 yr. velocity through existing bridge = 5.2 ft/s
10 yr. velocity through proposed bridge = 5.0 ft/s

MODEL: 0180057-74325-TSL-002
FILE NAME: pw:\\IL084EBIDINTEG.illinois.gov:PWIDOT\Documents\IDOT Offices\Bureau of Bridges and Structures\Projects\0180057\CADD Plans\0180057-74325.dgn

DESIGNED -	ALLY D. KELLEY
CHECKED -	ANDREW BAUER
DRAWN -	JACQUES ELLOYE
CHECKED -	RICHARD J. CHAPUT

1/4/2019 - 11:32:45 AM

STATE OF ILLINOIS
DEPARTMENT OF TRANSPORTATION

SHEET 2 OF 2 SHEETS

F.A.P. RTE.	SECTION	COUNTY	TOTAL SHEETS	SHEET NO.
828	(12BR-1)BR	CUMBERLAND		

CONTRACT NO. 74325

ILLINOIS | FED. AID PROJECT