Benchmark: Brass disc in the top of concrete curb on the Southwest corner of Structure 018-0028, Sta. 378+60, 17' RT, Elev. 577.537

Existing Structure: Structure No. 018-0028, built in 1928 as SBI 131, Sec. 108B. The original Structure was a single span concrete girder superstructure. In 1981 the superstructure was replaced with PPC deck beams. The substructure consists of closed abutments. The existing structure is 52'-10⅝" back to back of abutments and 33'-0" wide out to out of deck. The structure is to be removed and replaced utilizing stage construction.

Salvage: None

APPROVED

JUL 26 2017

AS A BASIS FOR PREPARATION OF DETAILED PLANS

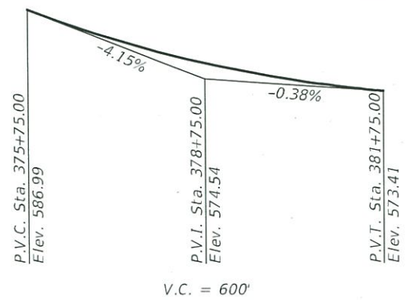

PROFILE GRADE
(Along ℄ F.A.P. Rte. 773)

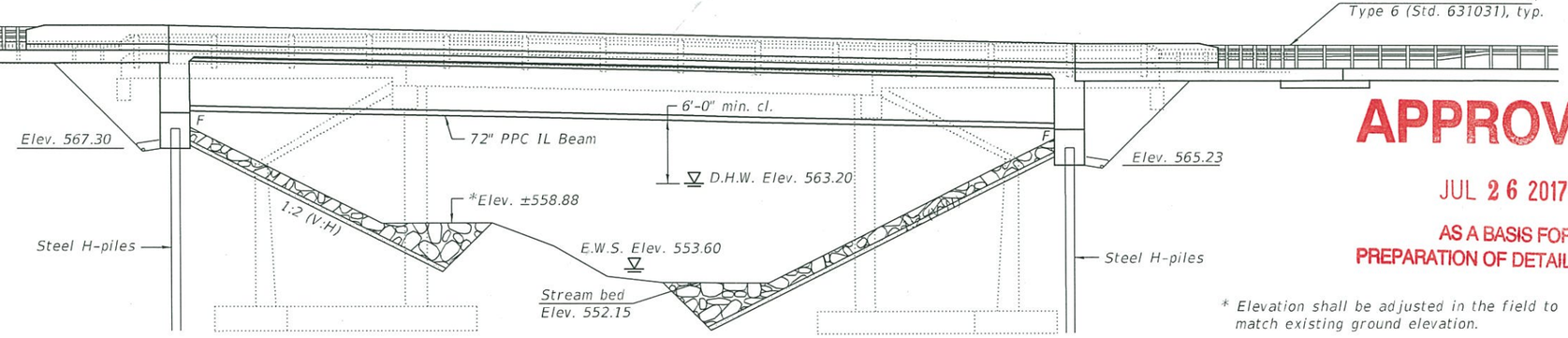

ELEVATION

* Elevation shall be adjusted in the field to match existing ground elevation.

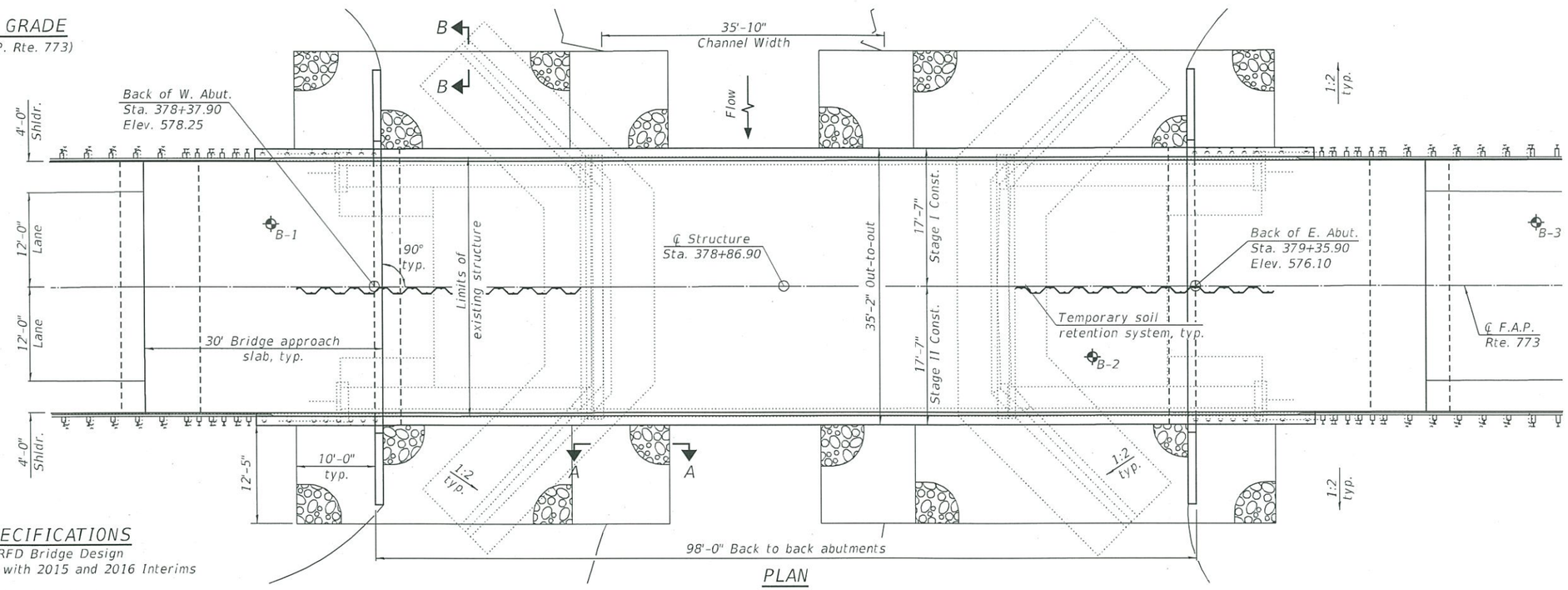

PLAN

N

DESIGN SPECIFICATIONS

2014 AASHTO LRFD Bridge Design Specifications, 7th Edition with 2015 and 2016 Interims

DESIGN STRESSES

FIELD UNITS

f'c = 3,500 psi
f'c = 4,000 psi (Concrete Superstructure)
fy = 60,000 psi (Reinforcement)

PRECAST PRESTRESSED UNITS

f'c = 8,500 psi
f'ci = 7,000 psi
fpu = 270,000 psi (0.6" ϕ Low Relaxation Strands)
fpy = 202,300 psi (0.6" ϕ Low Relaxation Strands)

HIGHWAY CLASSIFICATION

F.A.P. Rte. 773 - IL Rte. 121
Functional Class: Minor Arterial
ADT: 1650 (2019); 2050 (2039)
ADTT: 200 (2019); 249 (2039)
DHV: 182 (2019)
Design Speed: 60 m.p.h.
Posted Speed: 55 m.p.h.
Two-Way Traffic
Directional Distribution: 50:50

LOADING HL-93

Allow 50#/sq. ft. for future wearing surface.

SEISMIC DATA

Seismic Performance Zone (SPZ) = 2
Design Spectral Acceleration at 1.0 sec. (SD1) = 0.194g
Design Spectral Acceleration at 0.2 sec. (SDS) = 0.423g
Soil Site Class = D

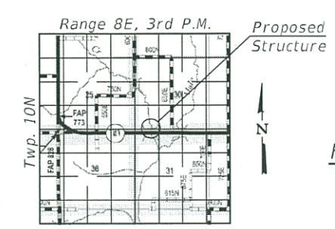

LOCATION SKETCH

GENERAL PLAN AND ELEVATION
ILLINOIS ROUTE 121 OVER LONG POINT BRANCH
F.A.P. ROUTE 773-SECTION (108BR-2)B-1
CUMBERLAND COUNTY
STATION 378+86.90
STRUCTURE NO. 018-0065

7/26/2017 8:53:11 AM

DESIGNED -	JERRY BISHOFF
CHECKED -	NICHOLAS R. BARNETT
DRAWN -	IAN J. ANDREWS
CHECKED -	JMB/NRB

7-26-2017

STATE OF ILLINOIS
DEPARTMENT OF TRANSPORTATION

SHEET NO. 1 OF 2 SHEETS

F.A.P. RTE.	SECTION	COUNTY	TOTAL SHEETS	SHEET NO.
773	(108BR-2)B-1	CUMBERLAND		
		CONTRACT NO. 74364		
		ILLINOIS FED. AID PROJECT		

Note: Existing telephone line is owned by Frontier Communications and is to be attached to the new structure.

APPROVED
JUL 26 2017
AS A BASIS FOR PREPARATION OF DETAILED PLANS

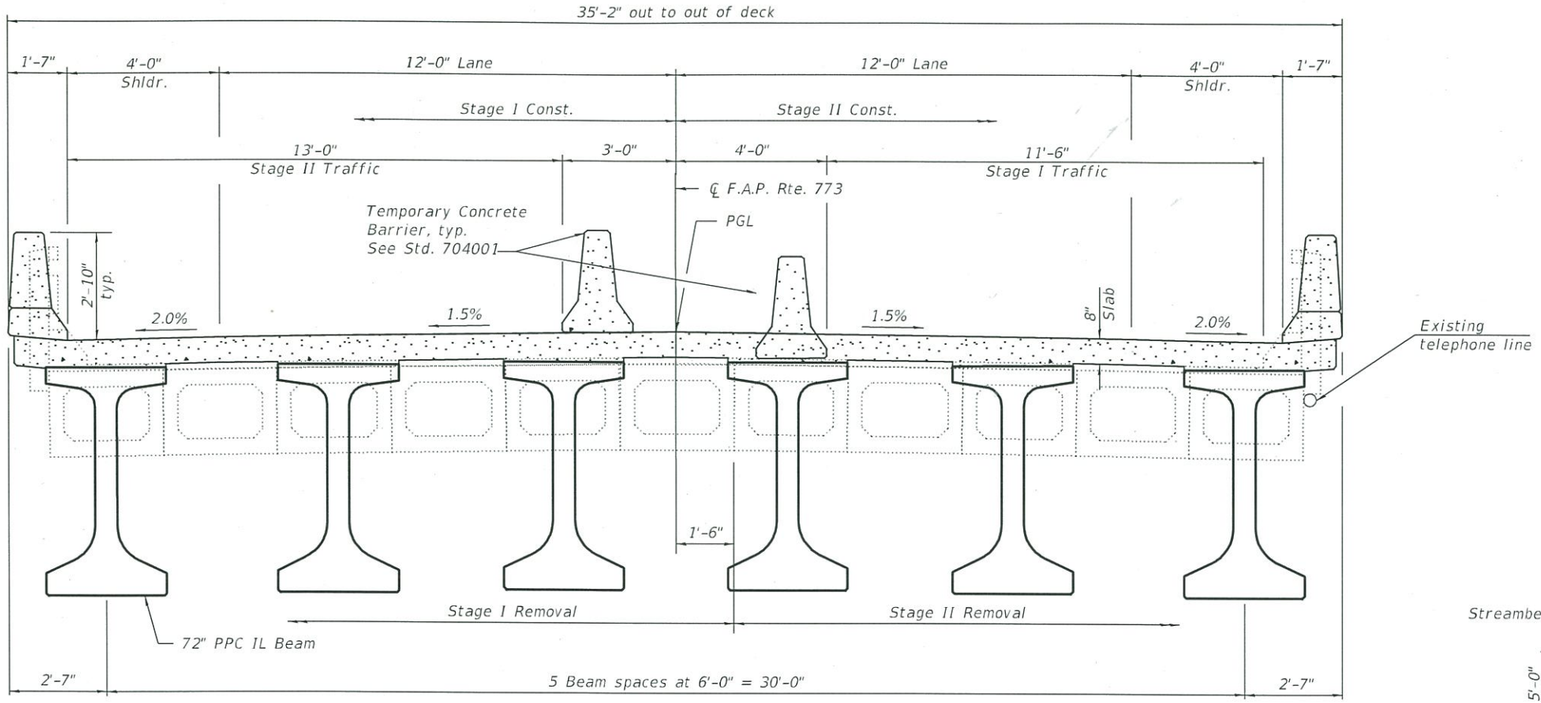

CROSS SECTION
(Looking East)

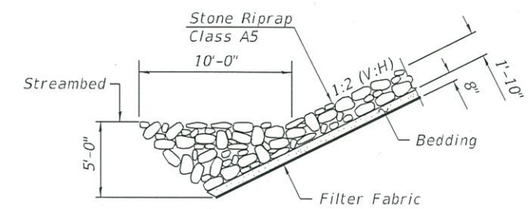

SECTION A-A

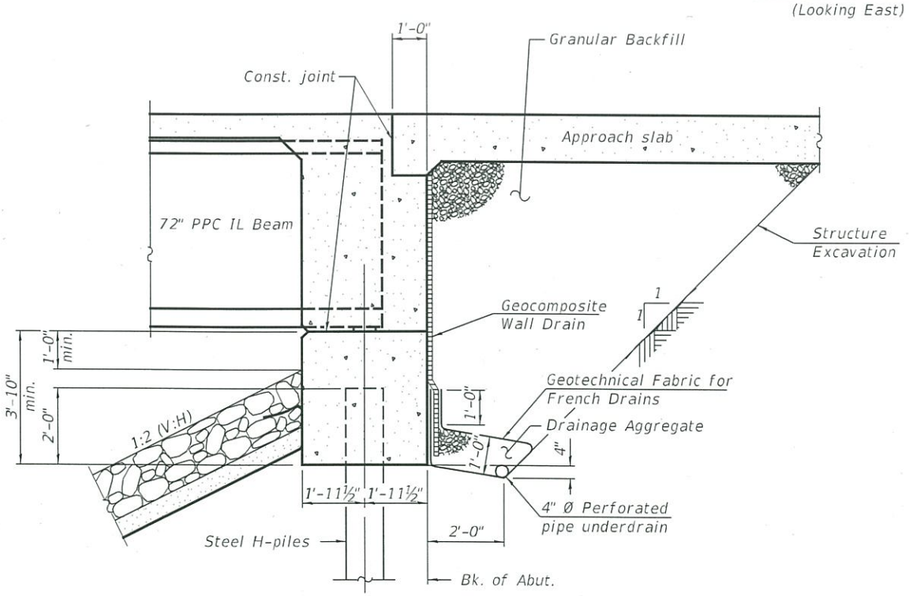

SECTION THRU INTEGRAL ABUTMENT

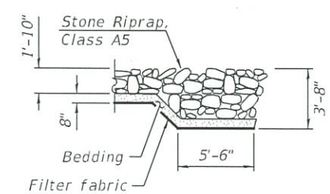

SECTION B-B

WATERWAY INFORMATION

Drainage Area = 11.91 sq.mi.

Existing Overtopping Elev. = 573.0 @ Sta. - 386+02.80
Proposed Overtopping Elev. = 573.0 @ Sta. - 386+02.80

Flood	Freq. Yr.	Q C.F.S.	Opening Sq. Ft. Exist.	Opening Sq. Ft. Prop.	Nat. H.W.E.	Head - Ft. Exist.	Head - Ft. Prop.	Headwater El. Exist.	Headwater El. Prop.
	10	2340	359	373	562.2	0.7	0.6	562.9	562.8
Design	50	3770	408	438	563.2	1.8	1.5	565.0	564.7
Base	100	4420	428	465	563.6	2.2	1.9	565.8	565.5
Overtop Existing	N/A								
Overtop Proposed	N/A								
Max. Calc.	500	6010	478	535	564.6	3.4	2.8	568.0	567.4

DESIGN SCOUR ELEVATION TABLE

Event / Limit State	Design Scour Elevations (ft.) West Abut.	East Abut.	Item 113
Q100	567.30	565.23	8
Q200	567.30	565.23	
Design	567.30	565.23	
Check	567.30	565.23	

DETAILS
ILLINOIS ROUTE 121 OVER
LONG POINT BRANCH
F.A.P. ROUTE 773-SECTION (108BR-2)B-1
CUMBERLAND COUNTY
STATION 378+86.90
STRUCTURE NO. 018-0065

7/26/2017 8:31:38 AM

DESIGNED -	JERRY BISHOFF
CHECKED -	NICHOLAS R. BARNETT
DRAWN -	IAN J. ANDREWS
CHECKED -	JMB/NRB

7-26-2017

STATE OF ILLINOIS
DEPARTMENT OF TRANSPORTATION

SHEET NO. 2 OF 2 SHEETS

F.A.P. RTE.	SECTION	COUNTY	TOTAL SHEETS	SHEET NO.
773	(108BR-2)B-1	CUMBERLAND		
		CONTRACT NO. 74364		
		ILLINOIS FED. AID PROJECT		