Bench Mark: #41 Square cut in SW wingwall S.N. 022-0103. Elev. 677.04.

Existing Structure: S.N. 022-0103 was originally built in 1970 as F.A.I. Route 90, Section 22-1B-1. The roadway was later renamed I-290. The existing structure consists of 3 simple span PPC box beam superstructures supported on reinforced concrete closed abutments founded on concrete piles and two reinforced concrete solid wall piers founded on steel piles. The existing bridge has an overall length of 102'-3½" and an out-to-out width of 237'-0". The I-290 westbound and eastbound roadways sit on earth fill varying in height up to 10' placed on the PPC box beams. The existing bridge is to be removed and replaced.

Traffic Control: Three lanes of traffic will be maintained in each direction utilizing stage construction.

No Salvage

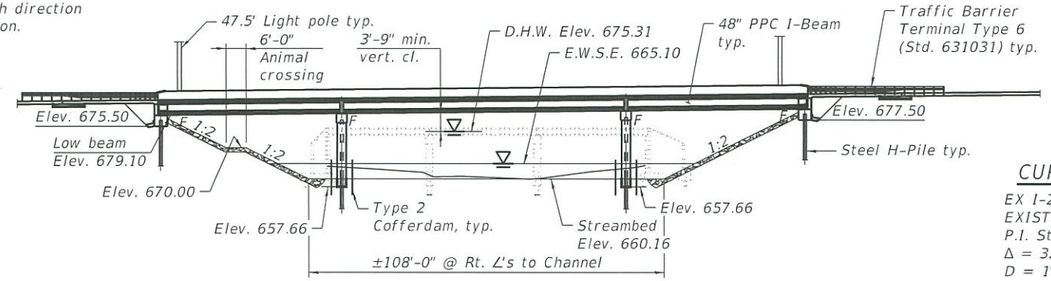

ELEVATION

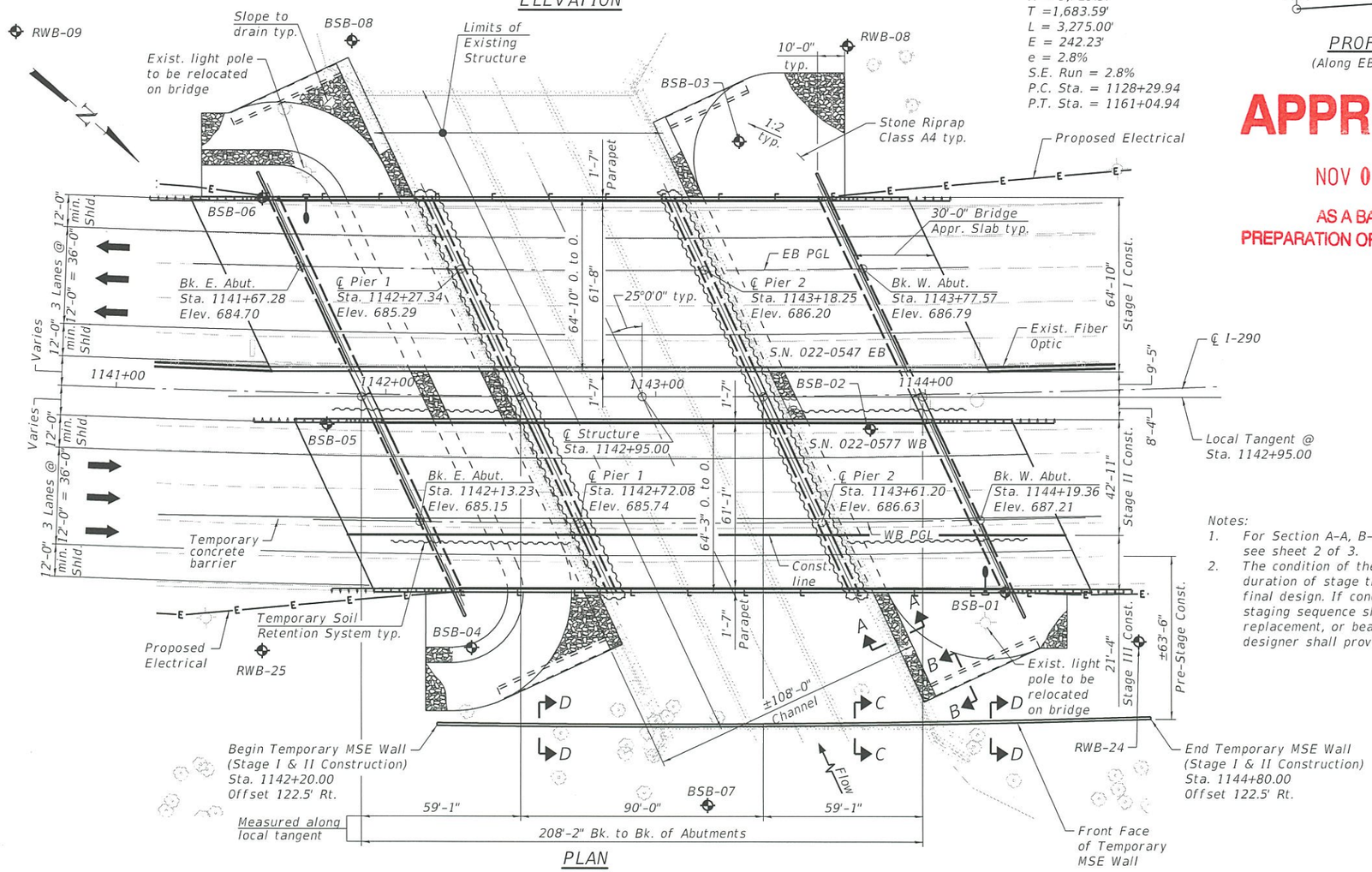

PLAN

DESIGN SCOUR ELEVATION TABLE

Event / Limit State	Design Scour Elevations (ft.)				
	E. Abut.	Pier 1	Pier 2	W. Abut.	Item 113
Q100	675.50	653.20	653.20	677.50	5
Q200	675.50	651.50	651.50	677.50	
Design	675.50	653.20	653.20	677.50	
Check	675.50	651.50	651.50	677.50	

CURVE DATA

EX I-290
EXISTING CURVE I290_E_6
P.I. Sta. = 1145+13.53
Δ = 32° 45' 00" (LT.)
D = 1° 00' 00"
R = 5,729.57'
T =1,683.59'
L = 3,275.00'
E = 242.23'
e = 2.8%
S.E. Run = 2.8%
P.C. Sta. = 1128+29.94
P.T. Sta. = 1161+04.94

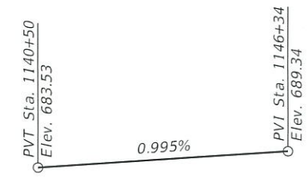

PROFILE GRADE

(Along EB PGL and WB PGL)

APPROVED

NOV 03 2017

AS A BASIS FOR PREPARATION OF DETAILED PLANS

HIGHWAY CLASSIFICATION

F.A.I. Rte. 290
Functional Class: Interstate
ADT: 143,700 (2016); 173,561 (2032)
ADTT: 12,933 (2016); 15,620 (2032)
DHV: 17,356
Design Speed: 60 m.p.h.
Posted Speed: 55 m.p.h.
Two-Way Traffic
Directional Distribution: 50:50

DESIGN SPECIFICATIONS

2014 AASHTO LRFD Bridge Design Specifications, 7th Edition with 2015 & 2016 Interim Revisions

LOADING HL-93

Allow 50#/sq. ft. for future wearing surface.

DESIGN STRESSES

FIELD UNITS

f'c = 3,500 psi
f'c = 4,000 psi (Superstructure Concrete)
fy = 60,000 psi (Reinforcement)

PRECAST PRESTRESSED UNITS

f'c = 6,000 psi
fci = 5,000 psi
fpu = 270,000 psi (½" Ø low lax strands)
fpbt = 201,960 psi (½" Ø low lax strands)

LIGHTWEIGHT CELLULAR CONCRETE FILL

Maximum As-Cast Density = 36 pcf
f'c = 80 psi

SEISMIC DATA

Seismic Performance Zone (SPZ) = 1
Design Spectral Acceleration at 1.0 sec. (SD1) = 0.086
Design Spectral Acceleration at 0.2 sec. (SDS) = 0.151
Soil Site Class = D

WATERWAY INFORMATION

Drainage Area = 77.1 Sq. Mi. Low Grade Elev. 680.20 @ Sta. 1130+75

Flood	Freq. Yr.	Q C.F.S.	Opening Ft² Exist.	Opening Ft² Prop.	Nat. H.W.E.	Head - Ft. Exist.	Head - Ft. Prop.	Headwater El. Exist.	Headwater El. Prop.
	10	2,139	1,028	1,372	673.94	0.29	0.07	674.23	674.01
Design	50	3,100	1,044	1,570	675.31	0.89	0.11	676.20	675.42
Base	100	3,587	1,044	1,646	675.82	1.17	0.13	676.99	675.95
Overtopping	>500								
Max. Calc.	500	4,800	1,044	1,809	676.90	2.04	0.17	678.94	677.07

10-Yr. Velocity through Existing Structure = 2.3 fps
10-Yr. Velocity through Proposed Structure = 1.6 fps

Notes:
1. For Section A-A, B-B, C-C and D-D, see sheet 2 of 3.
2. The condition of the existing box beams for the duration of stage traffic shall be verified during final design. If condition changes, the proposed staging sequence shall be re-evaluated. If a beam replacement, or beam support is required, the designer shall provide the necessary plans.

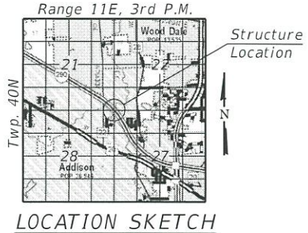

LOCATION SKETCH

GENERAL PLAN & ELEVATION
I-290 OVER SALT CREEK
F.A.I. RTE. 290 - SECTION (22-1B-1)B
DUPAGE COUNTY
STATION 1142+95
STRUCTURE NO. 022-0547 EB
STRUCTURE NO. 022-0577 WB

WSP USA Inc.
30 N. LASALLE STREET
SUITE 4200
CHICAGO, IL 60602
TEL: (312) 782-8150
FAX: (312) 782-1684

USER NAME = $USER$	DESIGNED - PJL	REVISED -
	CHECKED - AH	REVISED -
PLOT SCALE = N.T.S.	DRAWN - DCP	REVISED -
PLOT DATE = $DATE$	CHECKED - AH	REVISED -

STATE OF ILLINOIS
DEPARTMENT OF TRANSPORTATION

F.A. RTE.	SECTION	COUNTY	TOTAL SHEETS	SHEET NO.
290	(22-1B-1)B	DuPage	204	124

CONTRACT NO. 62C24

ILLINOIS FED. AID PROJECT

T:\16947A\Struct\Cadd\TS&L\0220547-62C24-TSL-001.dgn
03-NOV-2017 07:33

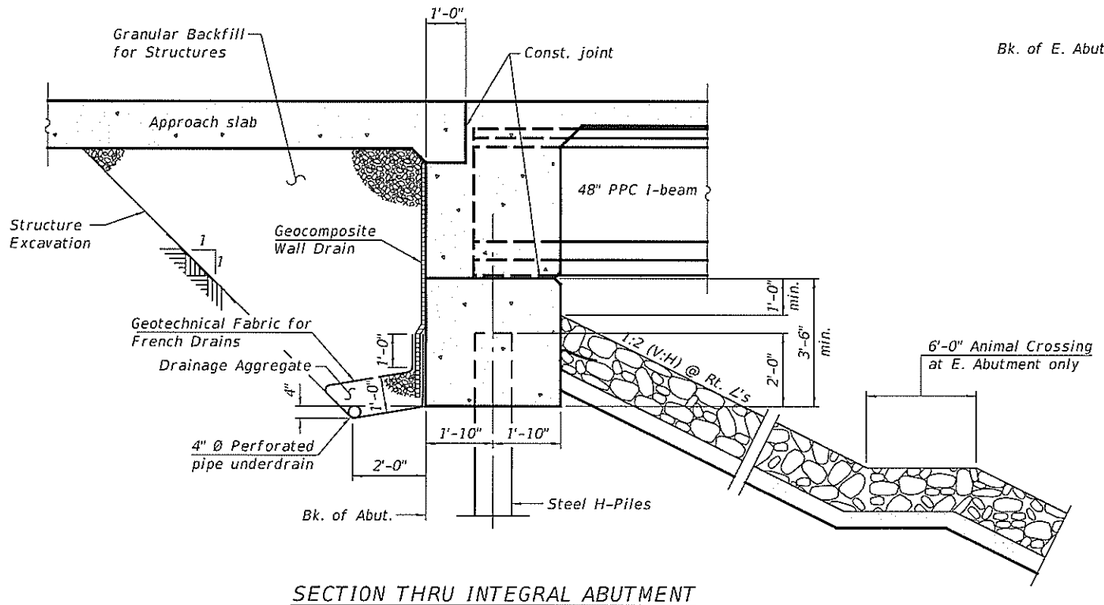

SECTION THRU INTEGRAL ABUTMENT
(Horiz. dim. @ Rt. L's)

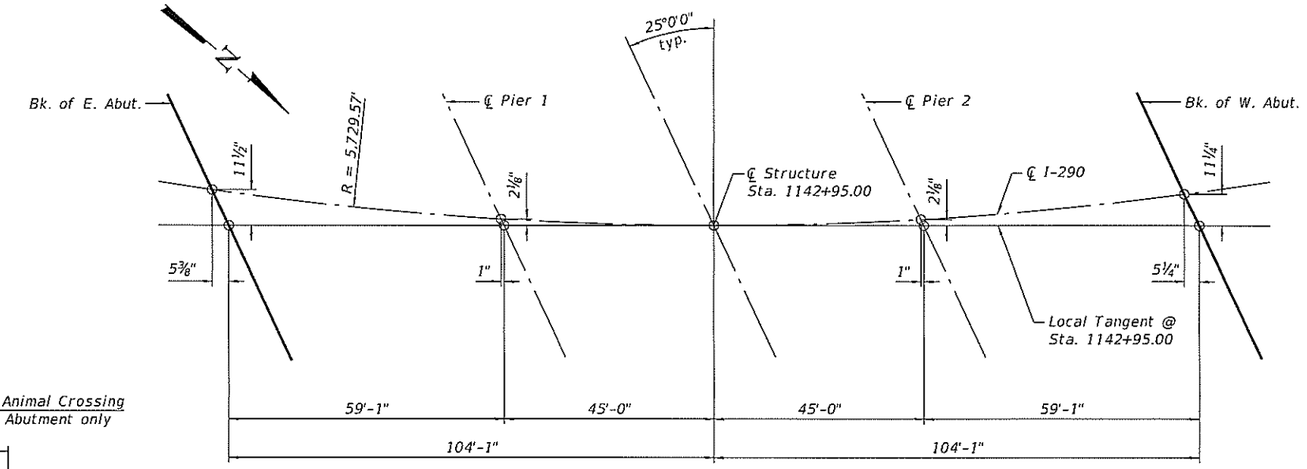

OFFSET SKETCH

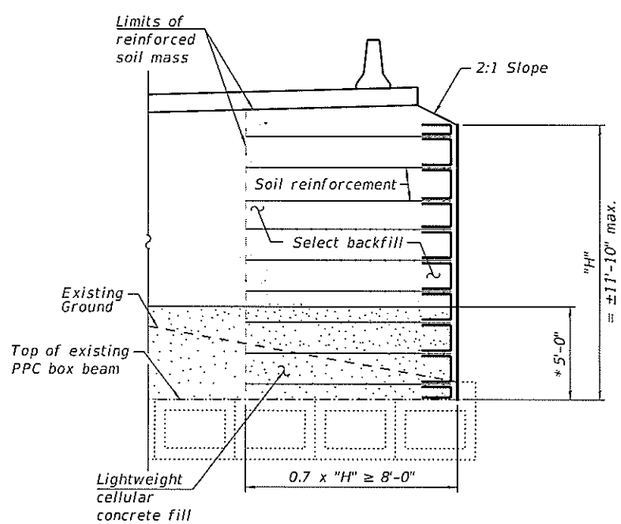

SECTION C-C
SECTION THRU TEMPORARY MSE WALL
ON EXISTING BRIDGE
(Pre-Stage Construction, see sheet 3 of 3)

* Height, length and width of lightweight cellular concrete fill as req'd by design

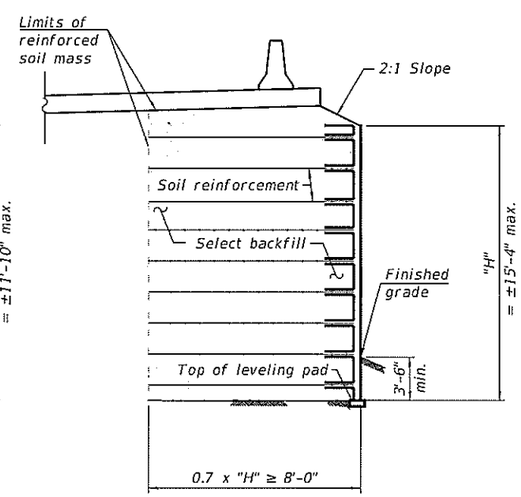

SECTION D-D
SECTION THRU TEMPORARY MSE WALL
OUTSIDE OF EXISTING BRIDGE
(Pre-Stage Construction, see sheet 3 of 3)

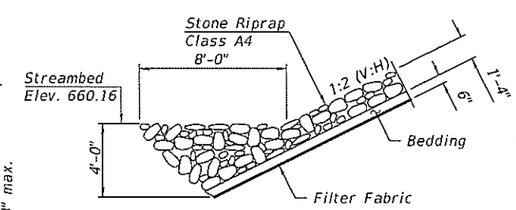

SECTION A-A

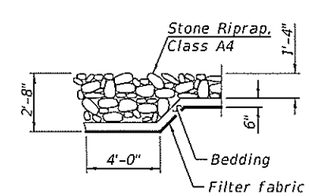

SECTION B-B

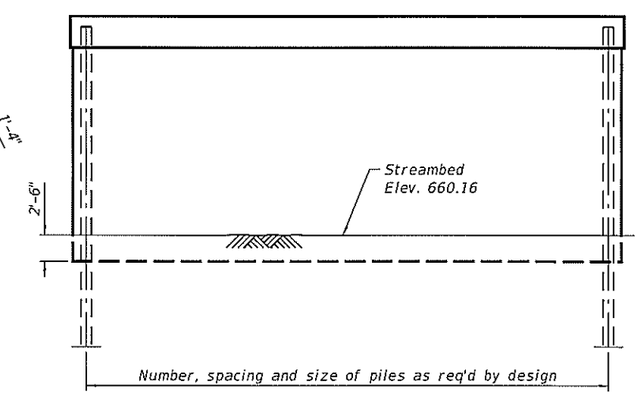

PIER SKETCH

DETAILS
I-290 OVER SALT CREEK
F.A.I. RTE. 290 - SECTION (22-1B-1)B
DUPAGE COUNTY
STATION 1142+95
STRUCTURE NO. 022-0547 EB
STRUCTURE NO. 022-0577 WB

T:\16947A\Struct\Cadd\TS&L\0220547-62C24-TSL-002.dgn
03-NOV-2017 07:34

WSP USA Inc.
30 N. LASALLE STREET
SUITE 4200
CHICAGO IL 60602
TEL: (312) 782-8163
FAX: (312) 782-1564

USER NAME = $USER$	DESIGNED - PJL	REVISED -	
	CHECKED - AH	REVISED -	
PLOT SCALE = N.T.S.	DRAWN - DCP	REVISED -	
PLOT DATE = $DATE$	CHECKED - AH	REVISED -	

STATE OF ILLINOIS
DEPARTMENT OF TRANSPORTATION

SHEET NO. 2 OF 3 SHEETS

F.A. RTE.	SECTION	COUNTY	TOTAL SHEETS	SHEET NO.
290	(22-1B-1)B	DuPage	204	125
		CONTRACT NO. 62C24		
		ILLINOIS FED. AID PROJECT		

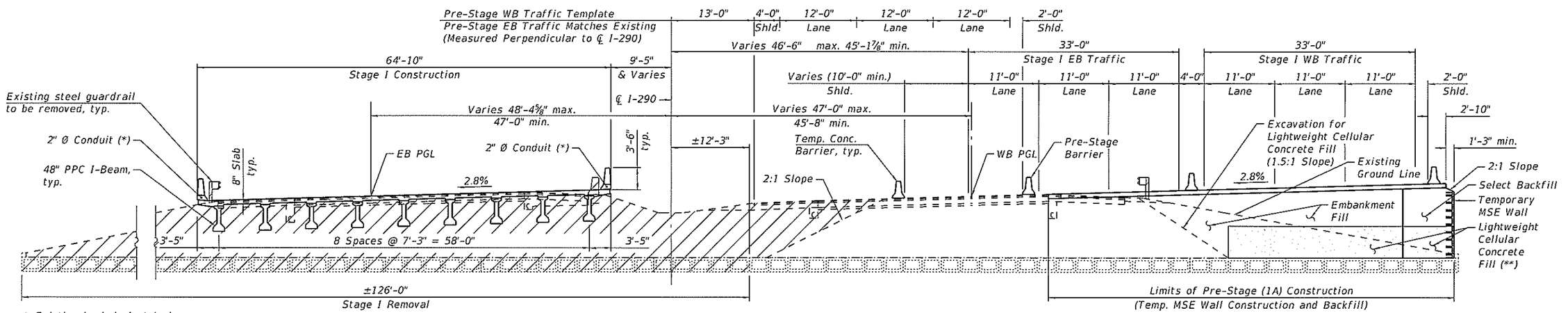

* Existing buried electrical conduits and fiber optic cable in barrier to be maintained and relocated during construction to conduit in barrier

CROSS SECTION - STAGE I (2A-2)

(Looking West)

** Lightweight Cellular Concrete Fill to be used on existing box beams as req'd by design

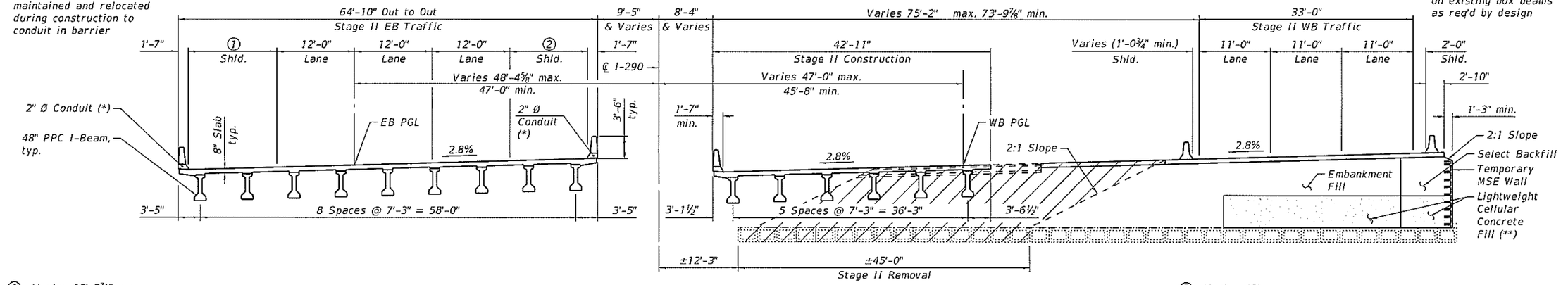

CROSS SECTION - STAGE II (2B)

(Looking West)

① Varies 13'-2⅞" max. 12'-0" min.

② Varies 13'-0¼" max. 12'-0" min.

③ Varies 13'-1" max. 12'-0" min.

④ Varies 13'-5½" max. 12'-0" min.

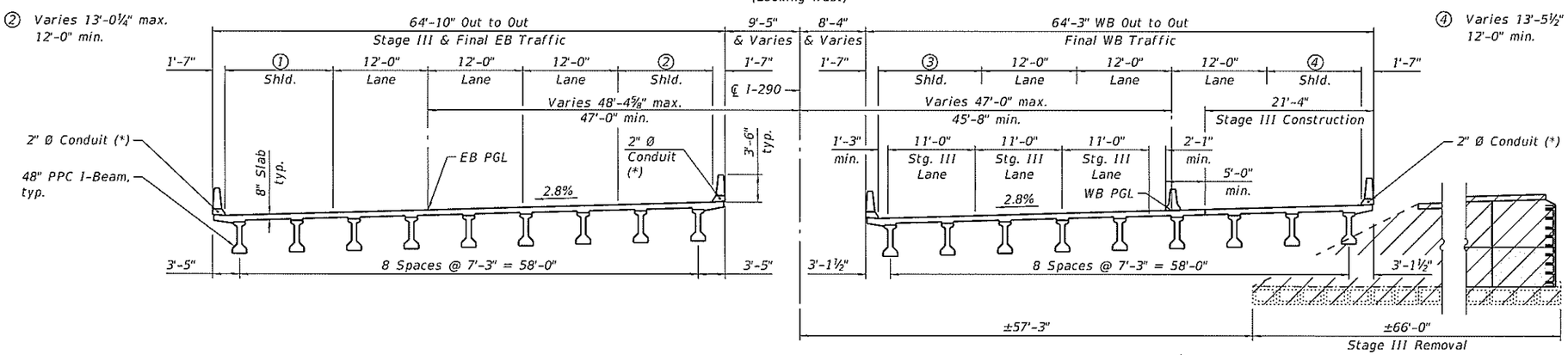

CROSS SECTION - STAGE III (2C)

(Looking West)

Note:
All horizontal dimensions are measured perpendicular to ℄ I-290 at Sta. 1142+95.00, unless noted otherwise.

DETAILS
I-290 OVER SALT CREEK
F.A.I. RTE. 290 - SECTION (22-1B-1)B
DUPAGE COUNTY
STATION 1142+95
STRUCTURE NO. 022-0547 EB
STRUCTURE NO. 022-0577 WB

T:\16947A\Struct\Cadd\TS&L\0220547-62C24-TSL-003.dgn
03-NOV-2017 07:34

WSP USA Inc.
30 N. LASALLE STREET
SUITE 4320
CHICAGO IL 60602
TEL: (312) 782-4152
FAX: (312) 782-4684

USER NAME = $USER$	DESIGNED - PJL	REVISED -	
	CHECKED - AH	REVISED -	
PLOT SCALE = N.T.S.	DRAWN - DCP	REVISED -	
PLOT DATE = $DATE$	CHECKED - AH	REVISED -	

STATE OF ILLINOIS
DEPARTMENT OF TRANSPORTATION

SHEET NO. 3 OF 3 SHEETS

F.A. RTE.	SECTION	COUNTY	TOTAL SHEETS	SHEET NO.
290	(22-1B-1)B	DuPage	204	126
		CONTRACT NO. 62C24		
		ILLINOIS FED. AID PROJECT		