Bench Mark: A cut cross on top of the northwest corner of the concrete foundation of a traffic handhole on the northeast corner of Illinois Route 53 and the entrance to the Morton Arboretum (Park Boulevard). Elev. 672.154

Roadway, path, culverts and walls built using stage construction. Northern portion of Culvert No. 2 built in roadway Stage 2. Walls, Culvert No. 3, and southern portion of Culvert No. 2 built in roadway Stage 3. Box culverts with barrel cutoff walls shall be built prior to adjacent wall construction. See Box Culvert and Roadway Plans.

Existing Structure: None

* Pile section, spacing and tip elevation to be determined during final design.

Notes: Offsets are measured from the Path ℄ to the front face of the wall.

Radii are measured from the back face of the wall.

Wall to be built along straight chords between wall joints from begin wall to Sta. 208+04.43. Wall to be built along maximum 4'-0" chords from Sta. 208+04.43 to end of wall.

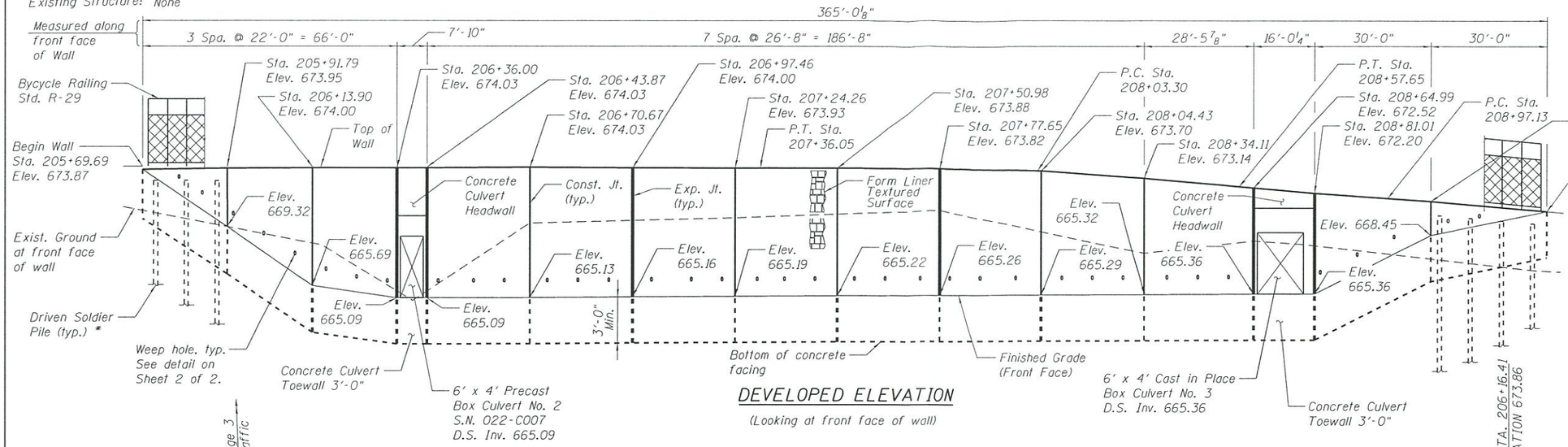

DEVELOPED ELEVATION

(Looking at front face of wall)

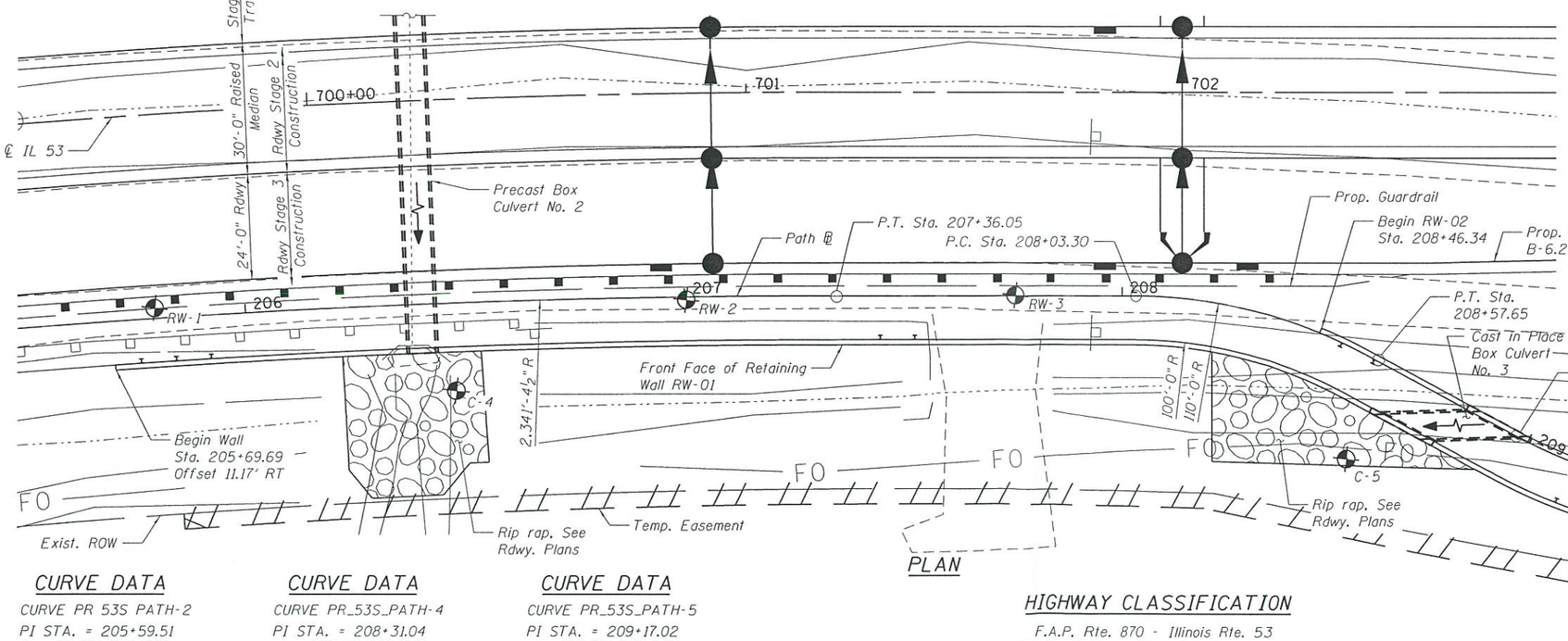

PLAN

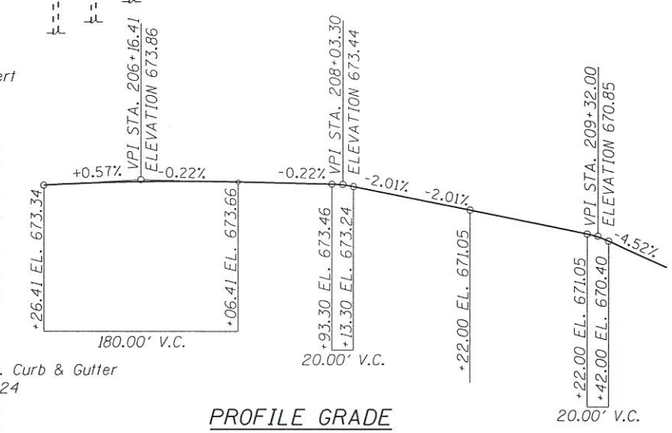

PROFILE GRADE

(Along Path ℄)

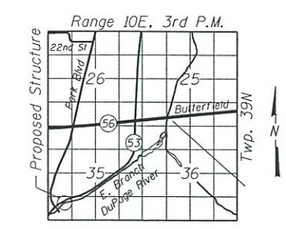

LOCATION SKETCH

APPROVED

SEP 06 2017

AS A BASIS FOR PREPARATION OF DETAILED PLANS

CURVE DATA

CURVE PR 53S PATH-2
PI STA. = 205+59.51
Δ = 8° 39' 24" (RT)
D = 2° 26' 50"
R = 2,341.37'
T = 177.21'
L = 353.75'
E = 6.70'
P.C. STA. = 203+82.30
P.T. STA. = 207+36.05

CURVE DATA

CURVE PR_53S_PATH-4
PI STA. = 208+31.04
Δ = 28° 18' 30" (RT)
D = 52° 05' 13"
R = 110.00'
T = 27.74'
L = 54.35'
E = 3.44'
P.C. STA. = 208+03.30
P.T. STA. = 208+57.65

CURVE DATA

CURVE PR_53S_PATH-5
PI STA. = 209+17.02
Δ = 19° 37' 54" (LT)
D = 49° 49' 21"
R = 115.00'
T = 19.90'
L = 39.40'
E = 1.71'
P.C. STA. = 208+97.13
P.T. STA. = 209+36.53

DESIGN STRESSES

FIELD UNITS

f'c = 3,500 psi
fy = 60,000 psi (Reinforcement)
fy = 50,000 psi (M270 Grade 50)

HIGHWAY CLASSIFICATION

F.A.P. Rte. 870 - Illinois Rte. 53
Functional Class: Other Principle Arterial
ADT: 40,000 (2040)
ADTT: 725 (2040)
DHV: 2,120
Design Speed: 45 m.p.h
Posted Speed: 45 m.p.h
Two-Way Traffic
Directional Distribution: 50/50

DESIGN SPECIFICATIONS

2014 AASHTO LRFD Bridge Design Specifications, 7th Edition with 2015 & 2016 Interims

GENERAL PLAN
ILLINOIS ROUTE 53 (FAP 870)
RETAINING WALL RW-01
SECTION 534X-R-2
DuPAGE COUNTY
STATION 205+69 TO 209+38
STRUCTURE NO. 022-W072

FILE NAME = W:\191-134_IDOT_IL 53 at IL 56\IL 53 South Leg\CADD_Sheets\STRUCTURAL\Retaining Wall TS&L\D162B30_Sht-01_Wall.dgn

Bollinger, Lach & Associates, Inc. ITASCA, ILLINOIS	USER NAME =	DESIGNED - HB	REVISED -	STATE OF ILLINOIS DEPARTMENT OF TRANSPORTATION		F.A.P RTE.	SECTION	COUNTY	TOTAL SHEETS	SHEET NO.
		CHECKED - JJI	REVISED -			870	534X-R-2	DuPAGE	#TOT	#STR1
	PLOT SCALE =	DRAWN - GM	REVISED -					CONTRACT NO. 62B30		
	PLOT DATE = 8/21/2017	CHECKED - JJI	REVISED -		SHEET NO. 1 OF 2 SHEETS			ILLINOIS FED. AID PROJECT		

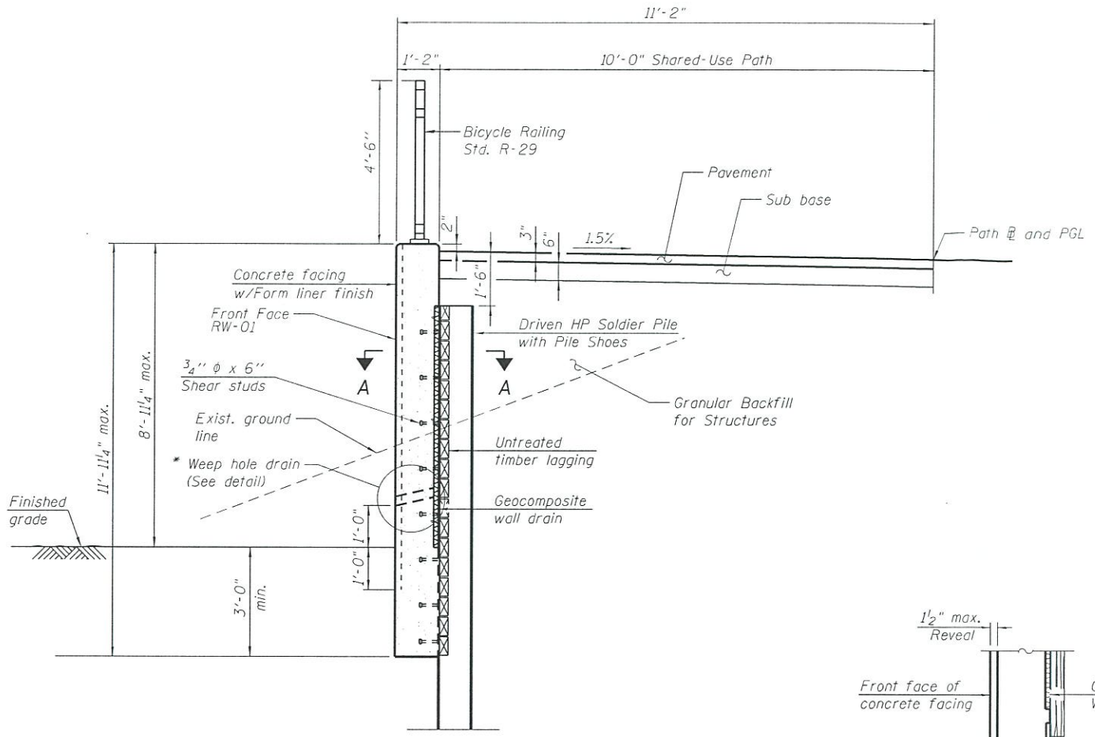

SECTION THRU DRIVEN
SOLDIER PILE WALL

* Weep hole spacing shall be at ±8'-0" horizontally

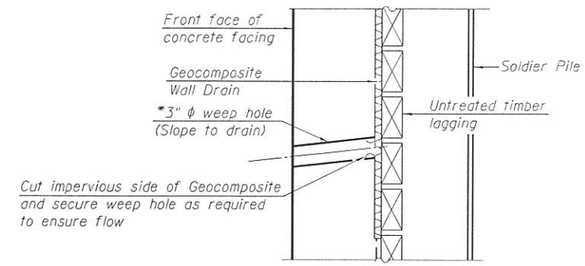

WEEP HOLE DRAIN DETAIL

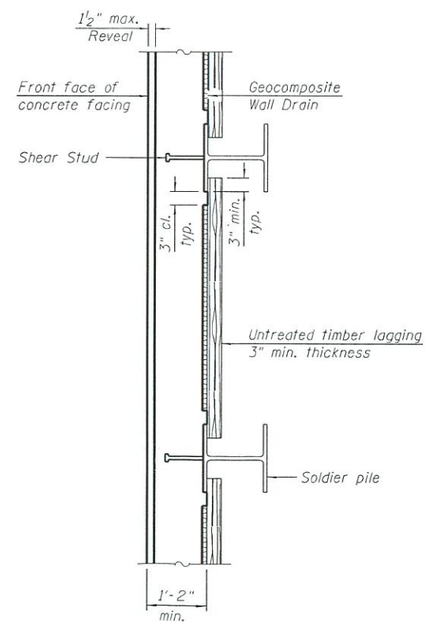

SECTION A-A

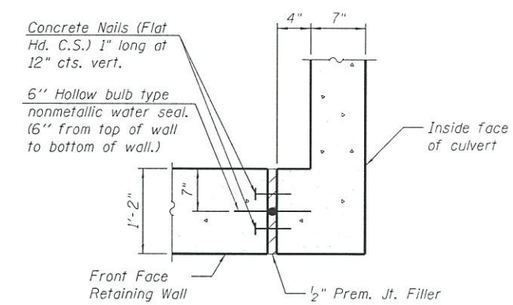

JOINT DETAIL AT CULVERTS
(Culvert No. 2 shown, Culvert No. 3 similar)

APPROVED

SEP 06 2017

AS A BASIS FOR PREPARATION OF DETAILED PLANS

DETAILS
ILLINOIS ROUTE 53 (FAP 870)
RETAINING WALL RW-01
SECTION 534X-R-2
DuPAGE COUNTY
STATION 205+69 TO 209+38
STRUCTURE NO. 022-W072

FILE NAME = W:\191-134_IDOT_IL 53 at IL 56\IL 53 South Leg\CADD_Sheets\STRUCTURAL\Retaining Wall TS&L\D162830_Sht-02_WallDet.dgn

Bollinger, Lach & Associates, Inc. ITASCA, ILLINOIS	USER NAME =	DESIGNED - HB	REVISED -	STATE OF ILLINOIS DEPARTMENT OF TRANSPORTATION		F.A.P RTE.	SECTION	COUNTY	TOTAL SHEETS / SHEET NO.
		CHECKED - JJI	REVISED -			870	534X-R-2	DuPAGE	$TOT / $STR2
	PLOT SCALE =	DRAWN - GM	REVISED -					CONTRACT NO. 62B30	
	PLOT DATE = 8/21/2017	CHECKED - JJI	REVISED -		SHEET NO. 2 OF 2 SHEETS		ILLINOIS FED. AID PROJECT		