Bench Mark: B.M. 4852-1: Chiseled square on the west edge of the south concrete bridge approach pavement of S.N. 023-0019, Elevation 654.65.

Existing Structure: S.N. 023-0019 originally built in 1928 as SBI Route 49, Section 116B at Station 465+78 as a 3-span reinforced concrete T-beam bridge. In 1980 the piers and abutments were widened and the superstructure was replaced with a widened PPC deck beam superstructure. The substructure consists of closed R.C. abutments on pile supported spread footings and two R.C. solid wall hammerhead piers on pile supported spread footings. The structure is 162'-0" back-to-back of abutments and 33'-0"out-to-out of deck with a clear roadway width of 32'-6". Existing structure is not skewed and is to be removed and replaced under staged construction.

There are weirs on the upstream side of the structure that accept the adjacent ditch flow.

No Salvage.

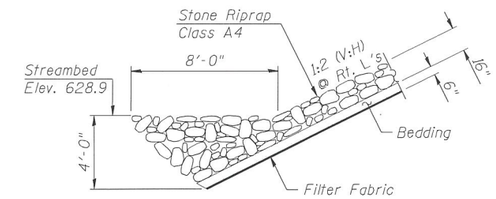

SECTION A-A

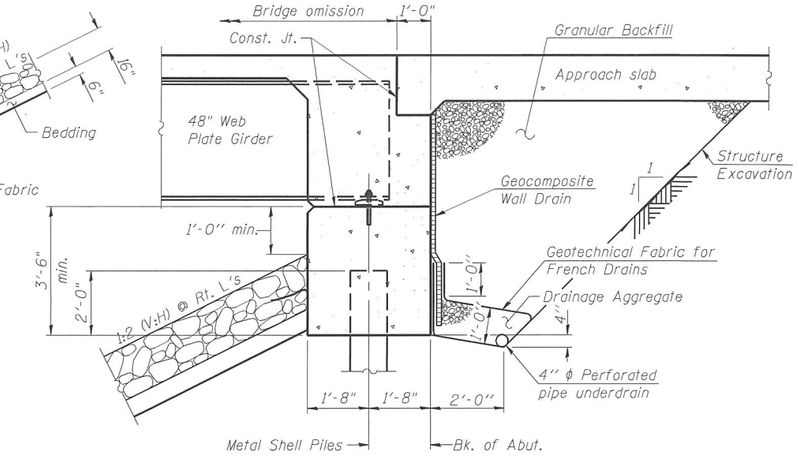

SECTION THRU INTEGRAL ABUTMENT

(Horiz. dim. @ Rt. L's)

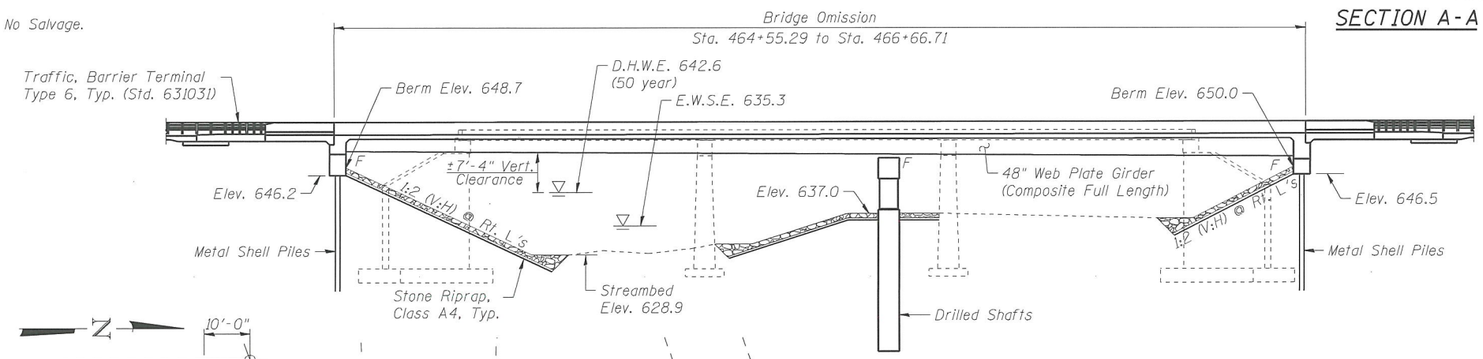

ELEVATION

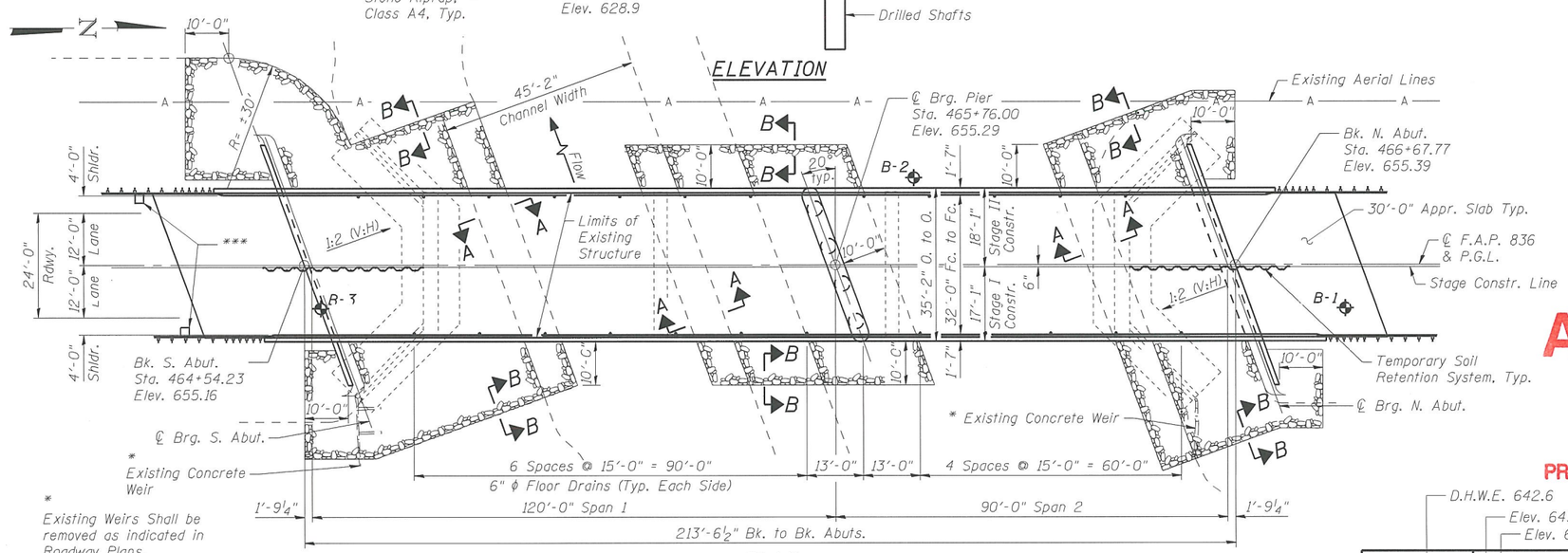

PLAN

* Existing Weirs Shall be removed as indicated in Roadway Plans.

*** Include inlets beyond bridge as required by design.

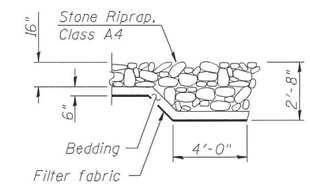

SECTION B-B

HIGHWAY CLASSIFICATION

F.A.P. 836-(IL 49)
Functional Class: Minor Arterial
ADT: 1200 (2013); 1350 (2031)
ADTT: 270 (2013); DHV: 110
Design Speed: 60 m.p.h.
Posted Speed: 55 m.p.h.
Two -Way Traffic
Directional Distribution: 50:50

LOADING HL-93

Allow 50#/sq. ft. for future wearing surface.

DESIGN SPECIFICATIONS

2014 AASHTO LRFD Bridge Design Specifications, 7th Edition with 2015 and 2016 Interims

DESIGN STRESSES

FIELD UNITS

f'c = 3,500 psi
f'c = 4,000 psi (Superstructure Concrete)
fy = 60,000 psi (Reinforcement)
fy = 50,000 psi (M270 Grade 50W)

SEISMIC DATA

Seismic Performance Zone (SPZ) =2
Design Spectral Acceleration at 1.0 sec. (S_{D1}) =0.159g
Design Spectral Acceleration at 0.2 sec. (S_{DS}) =0.306g
Soil Site Class =D

APPROVED

OCT 16 2019

AS A BASIS FOR
PREPARATION OF DETAILED PLANS

DESIGN SCOUR ELEVATION TABLE

Event/Limit State	Design Scour Elevations (ft.) S. Abut.	Pier	N. Abut.	Item 113
Q100	646.2	622.9	646.5	8
Q500	646.2	621.2	646.5	
Design	646.2	622.9	646.5	
Check	646.2	621.2	646.5	

WATERWAY INFORMATION

Drainage Area = 65.4 mi^2 Low Grade Elev. 655.06 Ft. @ Sta. 463+00

Flood	Freq. Yr.	Q C.F.S.	Opening Sq. Ft. Exist.	Prop.	Nat. H.W.E.	Head - Ft. Exist.	Prop.	Headwater El. Exist.	Prop.
	10	3240	839	1139	641.3	0.3	0.1	641.6	641.4
Design	50	5060	990	1358	642.6	0.5	0.2	643.1	642.8
Base	100	5850	1047	1443	643.1	0.6	0.3	643.7	643.4
Overtopping									
Max. Calc.	500	7740	1163	1617	644.1	0.9	0.4	645.0	644.5

10 Year Velocity Through Exist. Bridge = 4.02 fps
10 Year Velocity Through Prop. Bridge = 2.86 fps

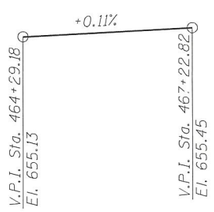

PROFILE GRADE

(Along ℄ IL 49)

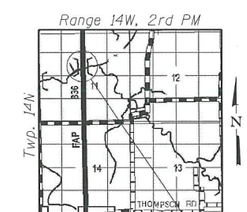

LOCATION SKETCH

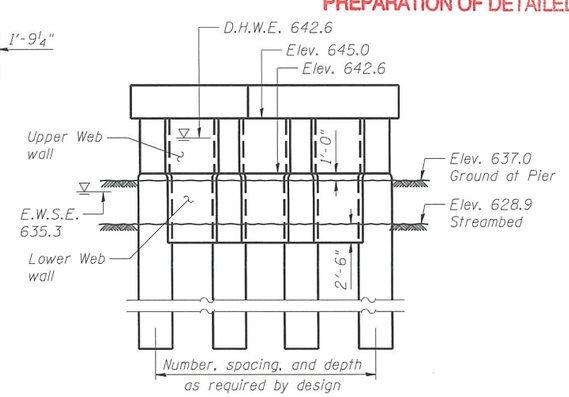

PIER SKETCH

GENERAL PLAN
IL 49 OVER CATFISH CREEK
F.A.P. 836 SECTION 116-BR-1
EDGAR COUNTY
STATION 465+76.00
STRUCTURE NO. 023-0035

CEC Cummins Engineering Corporation — Civil and Structural Engineering	JOB = 2399.2	DESIGNED - AAN	REVISED -	STATE OF ILLINOIS DEPARTMENT OF TRANSPORTATION	GENERAL PLAN STRUCTURE NO. 023-0035	F.A.P. RTE. 836	SECTION 116-BR-1	COUNTY EDGAR	TOTAL SHEETS	SHEET NO.
	FILE = 0230035-70608-TSL-002.RIP.dgn	CHECKED - MDC	REVISED -		SHEET NO. 1 OF 2 SHEETS			CONTRACT NO. 70608		
	DATE = 4/11/2017	DRAWN - SJS	REVISED -					ILLINOIS FED. AID PROJECT		
		CHECKED - MDC	REVISED -							

Hatched area indicates Removal of Existing Structures.

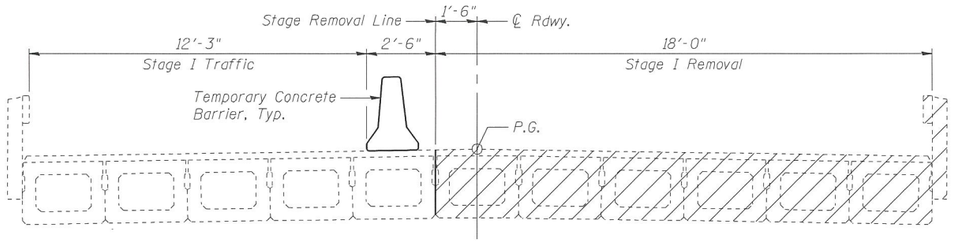

STAGE I REMOVAL
(Looking North)

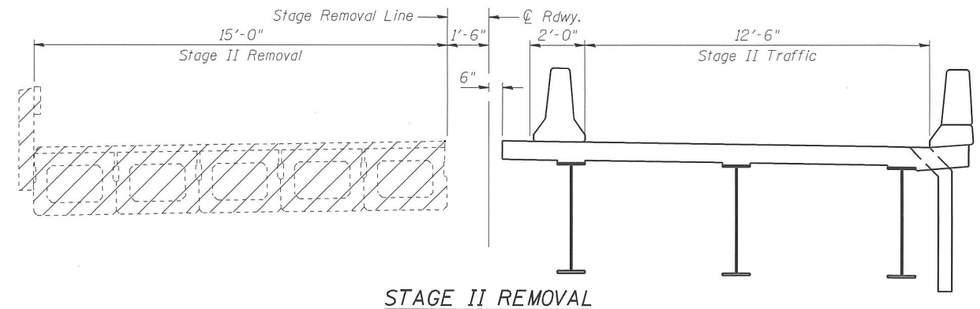

STAGE II REMOVAL
(Looking North)

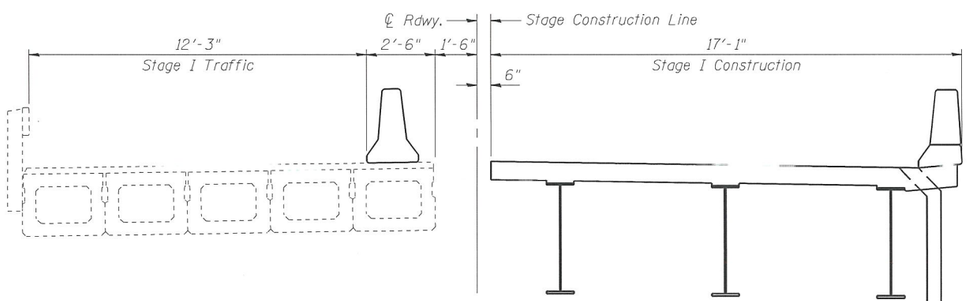

STAGE I CONSTRUCTION
(Looking North)

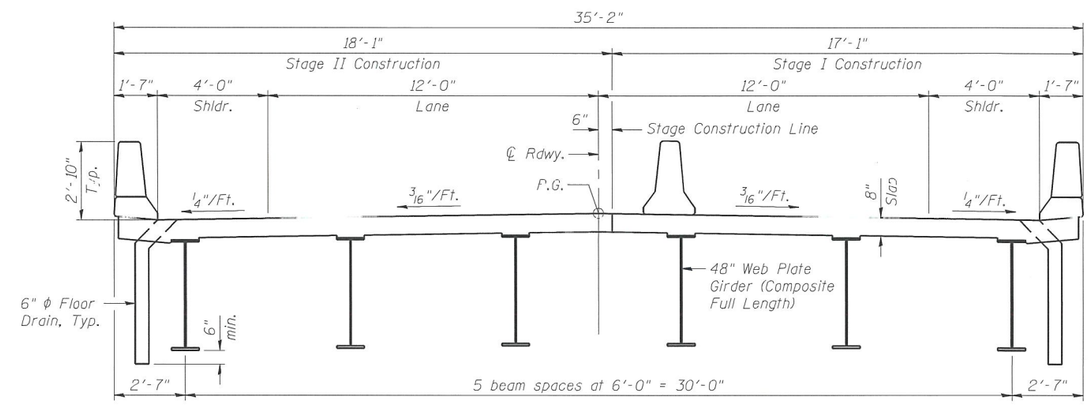

STAGE II CONSTRUCTION
(Looking North)

APPROVED

OCT 16 2019

AS A BASIS FOR
PREPARATION OF DETAILED PLANS

CEC Cummins Engineering Corporation — Civil and Structural Engineering	JOB = 2399.2	DESIGNED - AAN	REVISED -	STATE OF ILLINOIS DEPARTMENT OF TRANSPORTATION	STAGING CROSS SECTIONS STRUCTURE NO. 023-0035	F.A.P. RTE.	SECTION	COUNTY	TOTAL SHEETS / SHEET NO.
	FILE = 0230035-70608-TSL-002.RIP.dgn	CHECKED - MDC	REVISED -			836	116-BR-1	EDGAR	
	DATE = 4/11/2017	DRAWN - SJS	REVISED -					CONTRACT NO. 70608	
		CHECKED - MDC	REVISED -		SHEET NO. 2 OF 2 SHEETS		ILLINOIS FED. AID PROJECT		