Benchmark: Cut "□" in top south edge of concrete light pole foundation at I-55 NB exit ramp to IL-47, 69.39' LT. Sta. 42+39.13 - Elevation = 635.468

Existing Structure: S.N. 032-0079 was originally built in 1973 as Ill.-47 Section 32-3HB. The existing structure is a 2 span, concrete deck on continuous steel beam superstructure with concrete piers and vaulted abutments. The structure underwent repairs in 2006 including deck slab repair, substructure repair, joint replacement, and expansion bearing replacement. 203'-10½" Bk. to bk. abutments, 92'-0" out to out deck, 11° 9' 13" right ahead skew. Traffic to be maintained utilizing staged construction.

No salvage.

APPROVED

OCT 15 2019

AS A BASIS FOR PREPARATION OF DETAILED PLANS

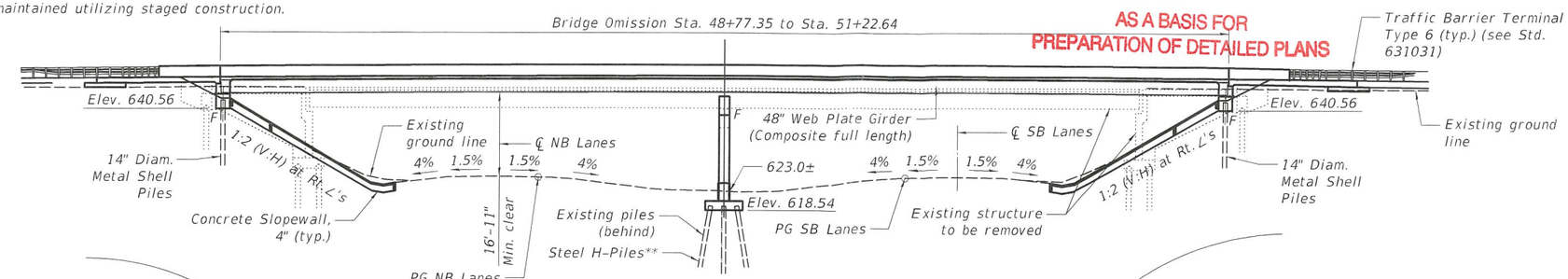

ELEVATION
(Looking West)

** Spaced transversely to miss existing piles

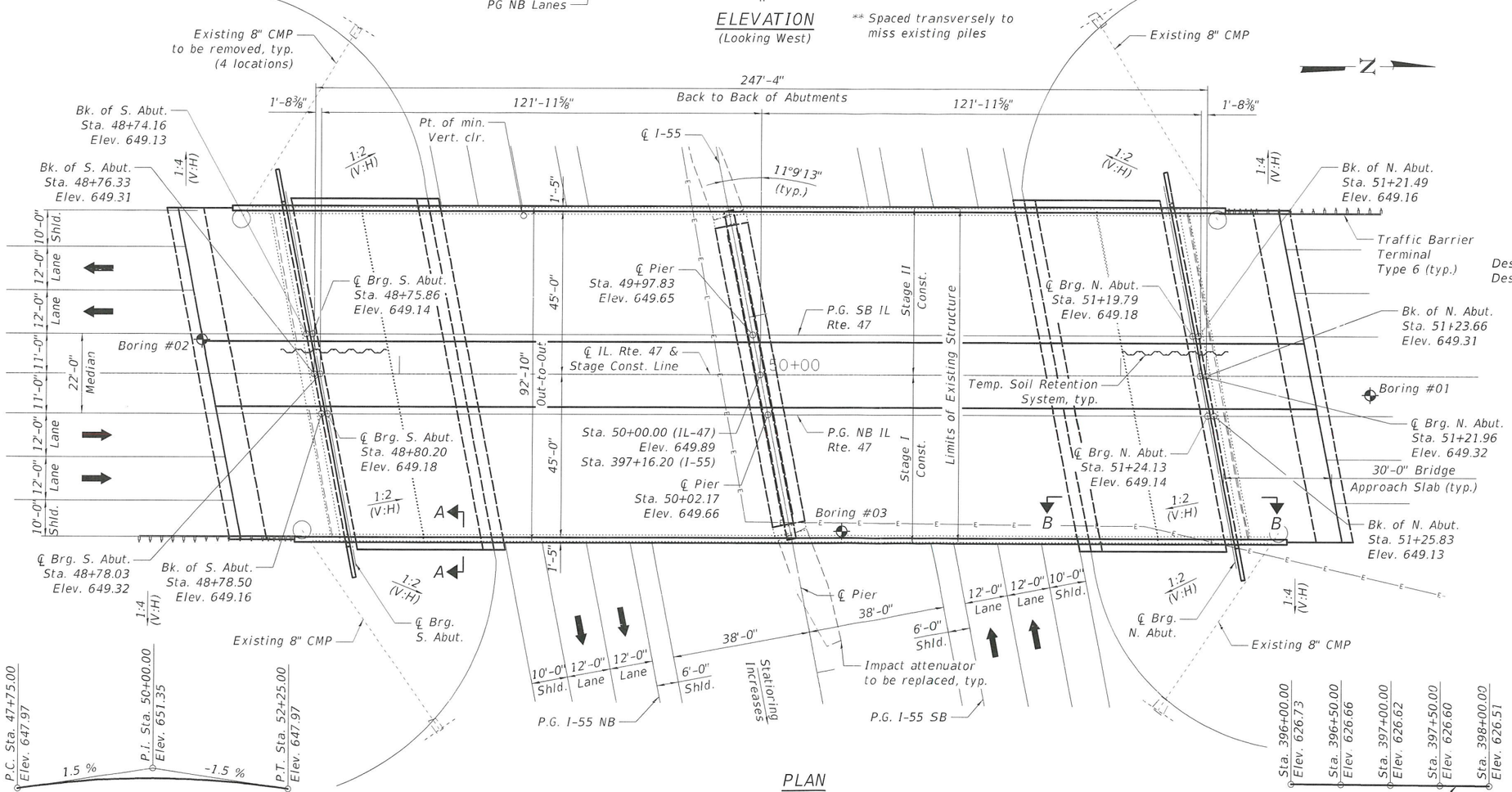

PLAN

IL-47 PROFILE GRADE
(LVC = 450')

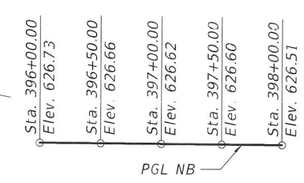

I-55 NB PROFILE GRADE

HIGHWAY CLASSIFICATION

F.A.P. Rte. 326 - IL-47
Functional Class: Other Principal Arterial
ADT: 8,125 (2017); 14,053 (2042)
ADTT: 2,812 (2017); 4,863 (2042)
DHV: 1,405 (2042)
Speed: 45 mph (posted); 50 mph (design)
Two-way traffic; Directional Dist. 50:50

HIGHWAY CLASSIFICATION

F.A.I. Rte. 55 - I-55
Functional Class: Interstate
ADT: 10,589 (2017) I-55 SB; 14,193 (2042) I-55 SB
ADT: 10,383 (2017) I-55 NB; 13,918 (2042) I-55 NB
ADTT: 3,473 (2017) I-55 SB; 4,655 (2042) I-55 SB
ADTT: 3,697 (2017) I-55 NB; 4,955 (2042) I-55 NB
DHV: 994 (2042) I-55 SB
DHV: 1,113 (2042) I-55 NB
Speed: 70 mph (posted); 70 mph (design)

LOADING HL-93

Allow 50 #/sq. ft. for future wearing surface.

DESIGN SPECIFICATIONS

2017 AASHTO LRFD Bridge Design Specifications, 8th Edition

DESIGN STRESSES

FIELD UNITS

f'c = 4,000 psi (superstructure)
f'c = 3,500 psi (substructure)
fy = 60,000 psi (reinforcement)
fy = 50,000 psi (M270 Grade 50) (girders)
fy = 36,000 psi (M270 Grade 36) (diaphragms)

SEISMIC DATA

Seismic Performance Zone (SPZ) = 1
Design Spectral Acceleration at 1.0 sec. (SD1) = 0.074g
Design Spectral Acceleration at 0.2 sec. (SDS) = 0.129g
Soil Site Class = C

Range 7E, 3rd P.M.

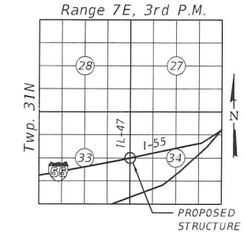

LOCATION SKETCH

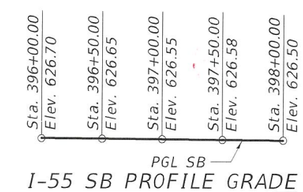

I-55 SB PROFILE GRADE

GENERAL PLAN
ILLINOIS ROUTE 47 OVER I-55
F.A.P. 326 - SEC [(32-3)HB-1]ES
GRUNDY COUNTY
STA. 50+00.00
STRUCTURE NO. 032-0125

HRG PROJECT NO.: $PROJECTNO$
HRG PROJ. CONTACT: $HRGPM$
FILE NAME: 0320079-D36GH5_TSL01.dgn
PLOT DRIVER: PLT_DRV
PEN TABLE: PEN_TABLE

BLOOM COMPANIES, LLC
Infrastructure Innovation and Ingenuity
150 N. Wacker Drive Suite 1650 • Chicago, IL 60606
Phone: (312) 876-9500 Fax: (312) 876-9650

USER NAME = jandrews	DESIGNED - RJO	REVISED -	
	CHECKED - RJO	REVISED -	
PLOT SCALE =	DRAWN - JA	REVISED -	
PLOT DATE = 2/15/2019	CHECKED - 2/14/18	REVISED -	

STATE OF ILLINOIS
DEPARTMENT OF TRANSPORTATION

SHEET NO. 1 OF 2 SHEETS

F.A.P. RTE.	SECTION	COUNTY	TOTAL SHEETS	SHEET NO.
326	[(32-3) HB-1] ES	GRUNDY	18	1
		CONTRACT NO. 66H15		
		ILLINOIS FED. AID PROJECT		

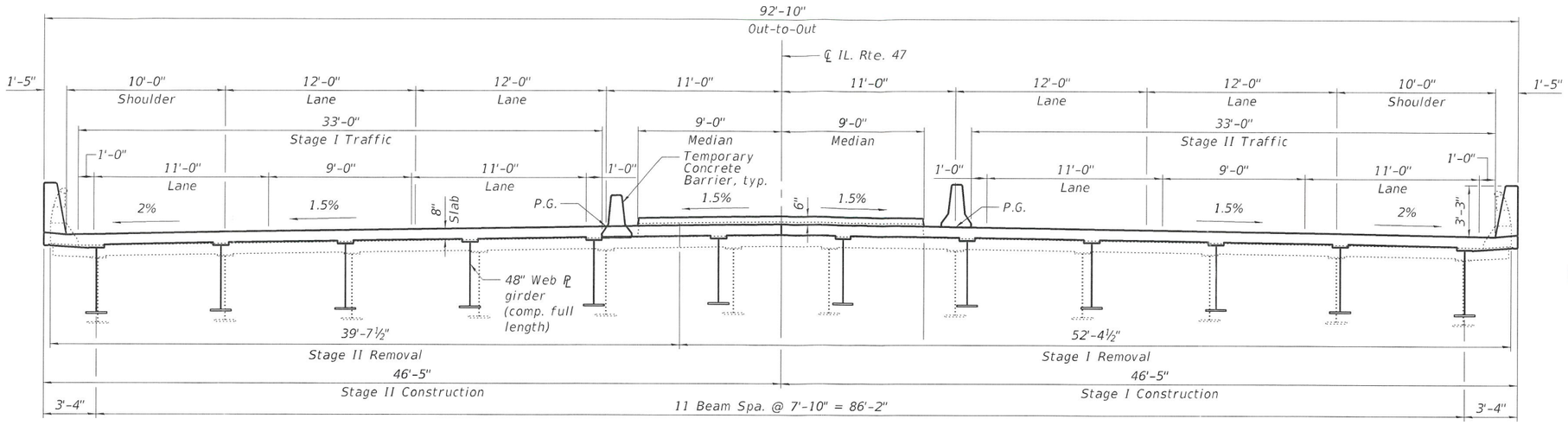

CROSS SECTION

(Looking North)

APPROVED

OCT 15 2019

AS A BASIS FOR PREPARATION OF DETAILED PLANS

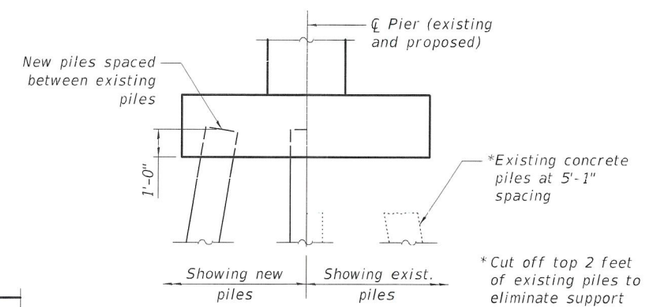

SECTION THRU PIER FOOTING

(Showing new piles between existing piles)

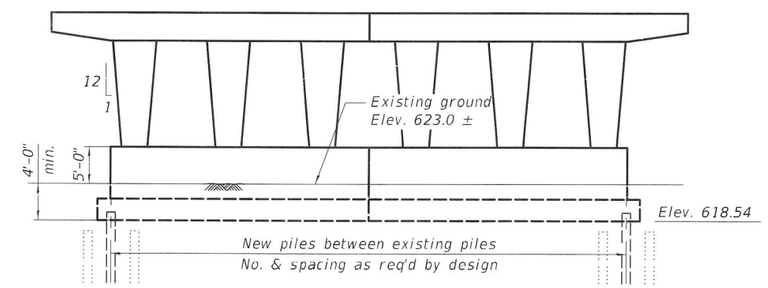

PIER SKETCH

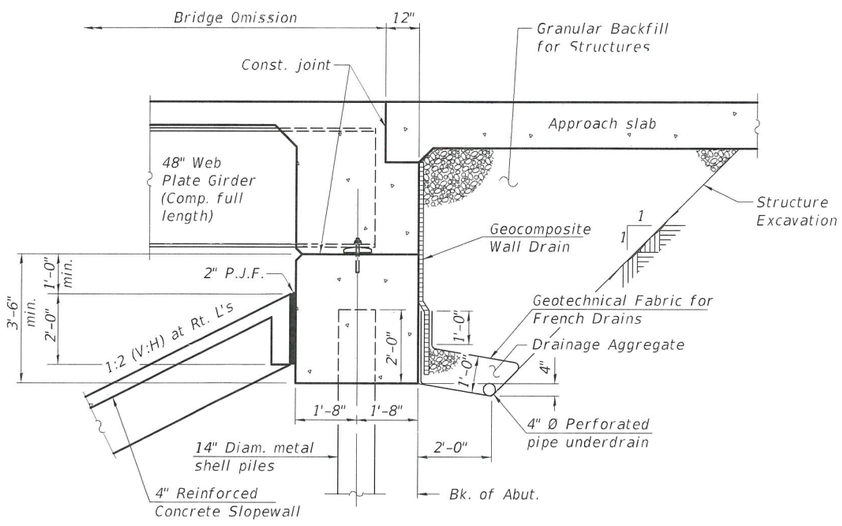

SECTION THRU INTEGRAL ABUTMENT

(Horiz. dim. @ Rt. ℄'s)

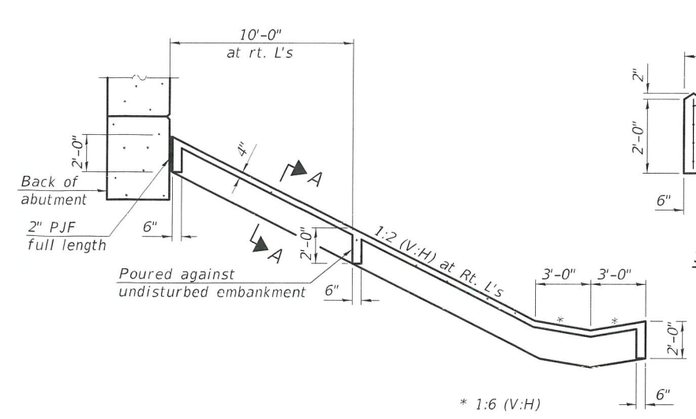

SECTION B-B

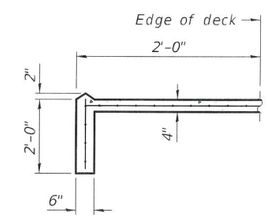

SECTION A-A

GENERAL PLAN
ILLINOIS ROUTE 47 OVER I-55
F.A.P. 326 - SEC [(32-3)HB-1]ES
GRUNDY COUNTY
STA. 50+00.00
STRUCTURE NO. 032-0125

HRC PROJECT NO. $PROJECTNO$
HRC PROJ. CONTACT: $HRCPM$
FILE NAME: 032\0179-D366H5_TSL02.dgn
PLOT DRIVER: PLT_DRV
PEN TABLE: PEN_TABLE

BLOOM COMPANIES, LLC
Infrastructure Innovation and Digitality
150 N. Wacker Drive, Suite 1050 • Chicago, IL 60606
Phone: (312) 876-9500 Fax: (312) 876-9693

USER NAME = jandrews	DESIGNED - RJO	REVISED -	
	CHECKED - RJO	REVISED -	
PLOT SCALE =	DRAWN - JA	REVISED -	
PLOT DATE = 2/15/2019	CHECKED - 2/14/18	REVISED -	

STATE OF ILLINOIS
DEPARTMENT OF TRANSPORTATION

SHEET NO. 2 OF 2 SHEETS

F.A.P. RTE.	SECTION	COUNTY	TOTAL SHEETS	SHEET NO.
326	[(32-3) HB-1] ES	GRUNDY	18	2
		CONTRACT NO. 66H15		
		ILLINOIS FED. AID PROJECT		