BENCHMARK: BM 630 – Cut square on N.E. wingwall of SN 041-0016, along NBL I-57 over railroad. Sta. 1253+50.00, Elev. 590.85

EXISTING STRUCTURES:
SN 041-0016 (NB) and SN 041-0017 (SB) were originally constructed in 1967 as F.A.I. 57, Section (41-4)VB. The three-span structures consist of concrete decks supported by rolled steel beams. The beams are supported by concrete column piers and stub abutments. All abutments are supported by steel piles. All piers are supported by spread footings. Back to back abutments is 213'-0". The superstructure width at both structures is 42'-0" out-to-out deck. The skew is 40°-34'-13". Interstate traffic will be maintained utilizing crossovers.

No salvage.

Up to ¼" may be ground off the bridge deck, the bridge approach slabs, and the pavement connectors.

No freefall deck drains will be permitted in the span over the tracks or within 10 ft. of cross arms of a railroad pole line.

See Sheet 2 of 2 for Sections A-A and B-B.

HIGHWAY CLASSIFICATION

F.A.I. 57 (I-57)
Functional Class: Interstate
NBL ADT: 11,459 (2019)/15,491 (2040)
NBL DHV: 1,239 (2040)
NBL ADTT: 4,664 (2019)/6,304 (2040)
SBL ADT: 11,459 (2019)/15,491 (2040)
SBL DHV: 1,239 (2040)
SBL ADTT: 4,664 (2019)/6,304 (2040)
Design Speed: 70 mph
Posted Speed: 70 mph

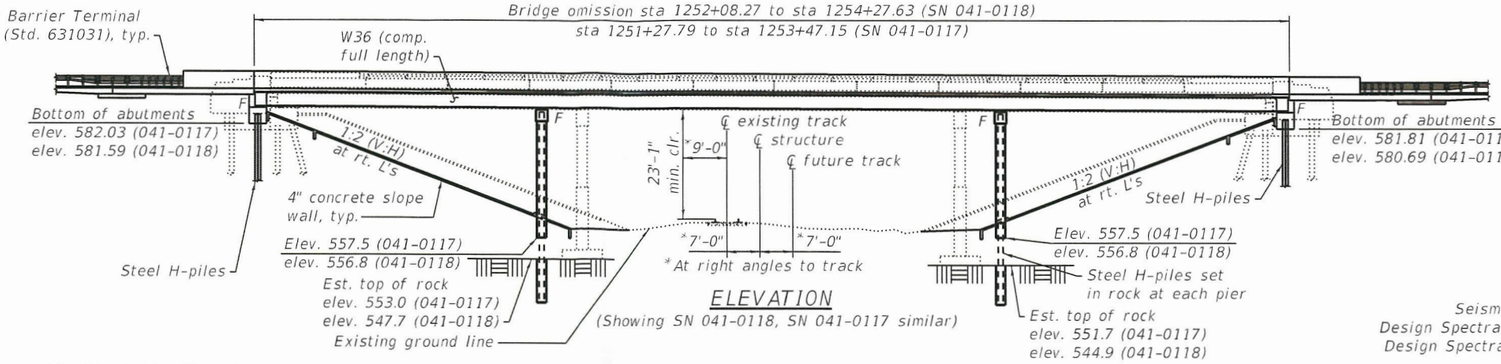

ELEVATION
(Showing SN 041-0118, SN 041-0117 similar)

LOADING HL-93

Allow 50 psf for future wearing surface

DESIGN SPECIFICATIONS

2017 AASHTO LRFD
Bridge Design Specifications 8th Edition

DESIGN STRESSES FIELD UNITS

f'c = 3,500 psi (substructure)
f'c = 4,000 psi (superstructure)
fy = 50,000 psi (AASHTO M270 Grade 50)
fy = 60,000 psi (reinforcement)

SEISMIC DATA

Seismic Performance Zone (SPZ) = 2
Design Spectral Acceleration at 1.0 sec. (S_{D1}) = 0.209 g
Design Spectral Acceleration at 0.2 sec. (S_{DS}) = 0.60 g
Site Soil Class = C

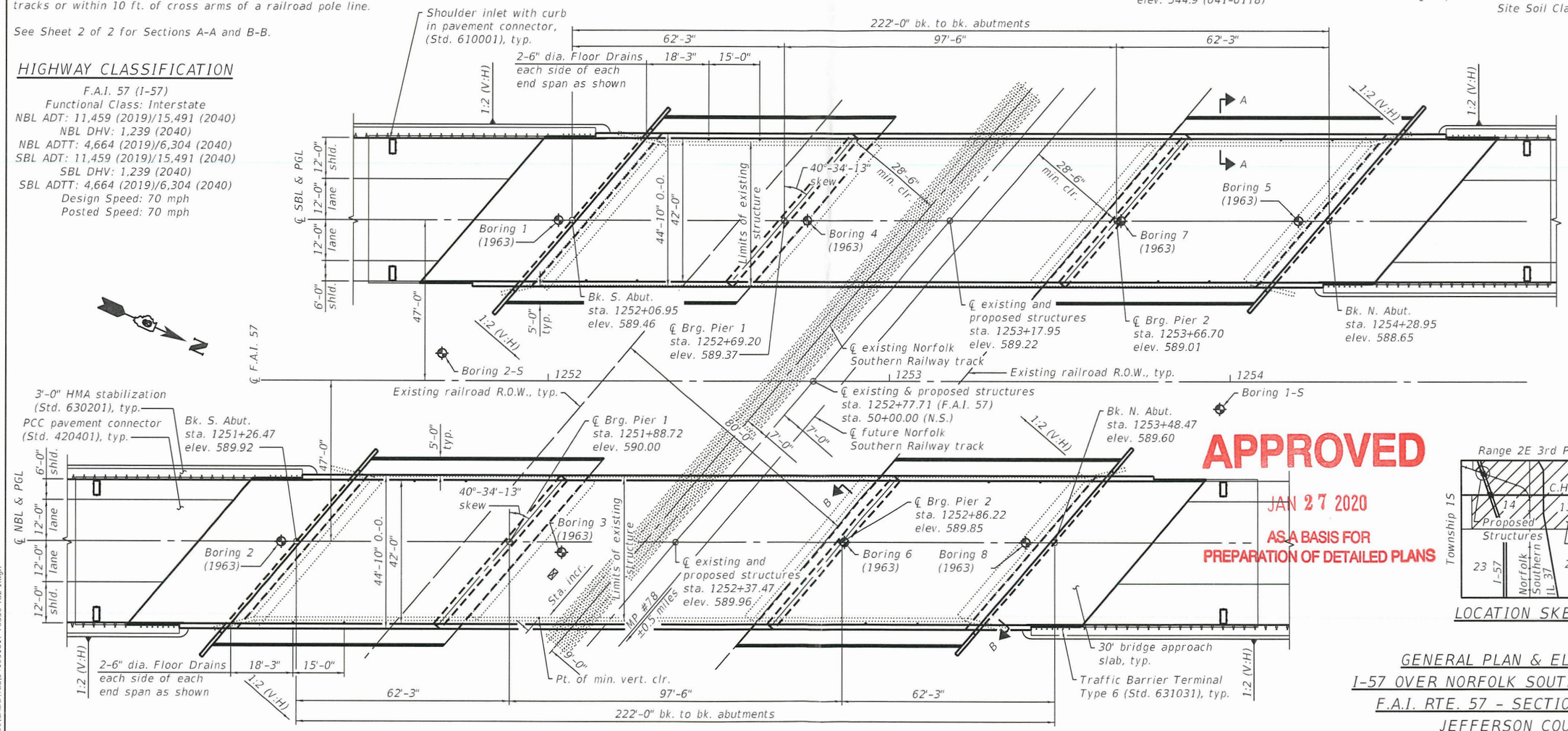

PLAN

APPROVED
JAN 27 2020
AS A BASIS FOR PREPARATION OF DETAILED PLANS

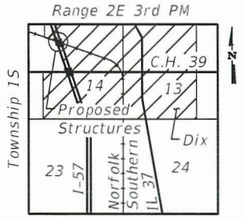

LOCATION SKETCH

GENERAL PLAN & ELEVATION
I-57 OVER NORFOLK SOUTHERN RAILWAY
F.A.I. RTE. 57 – SECTION (41-4)B-1
JEFFERSON COUNTY
STATION 1252+77.71
STRUCTURE NO. 041-0117 (NB)
STRUCTURE NO. 041-0118 (SB)

ESCA CONSULTANTS, INC.

USER NAME = kah	DESIGNED - RTM	08/19	REVISED -	
ESCA PROJECT NO. 1259.07	CHECKED - ELH	08/19	REVISED -	
PLOT SCALE = 0.167 ' / in.	DRAWN - KAH/SHL	01/20	REVISED -	
PLOT DATE = 1/20/2020	CHECKED - ELH	01/20	REVISED -	

STATE OF ILLINOIS
DEPARTMENT OF TRANSPORTATION

SHEET 1 OF 2 SHEETS

F.A.I. RTE.	SECTION	COUNTY	TOTAL SHEETS	SHEET NO.
57	(41-4)B-1	JEFFERSON	-	-
		CONTRACT NO. 78550		
		ILLINOIS	FED. AID PROJECT	

MODEL: PLOI
FILE NAME: Y:\IDOT\1259-07_78550\CADD\TSL\041001617-78550-TSL-1.dgn
1/20/2020 2:12:00 PM

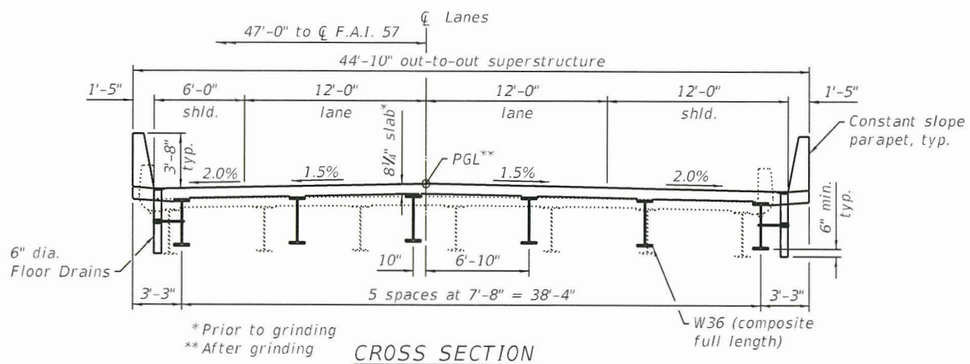

CROSS SECTION

(SN 041-0118 looking south shown, SN 041-0117 looking north similar)

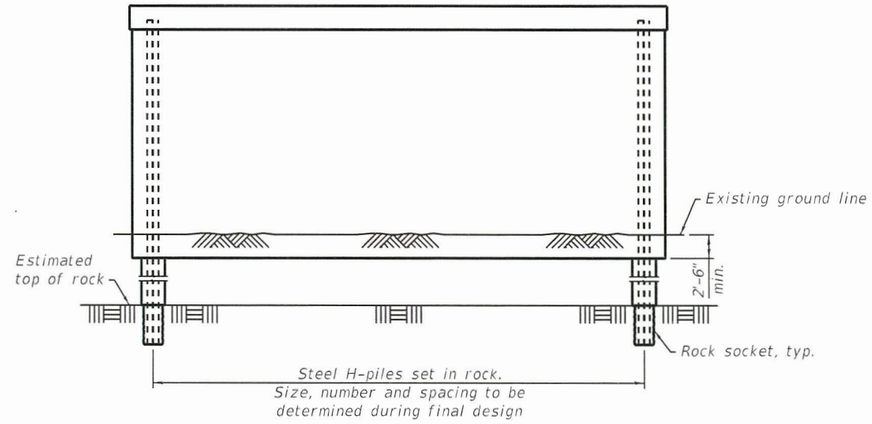

PIER SKETCH

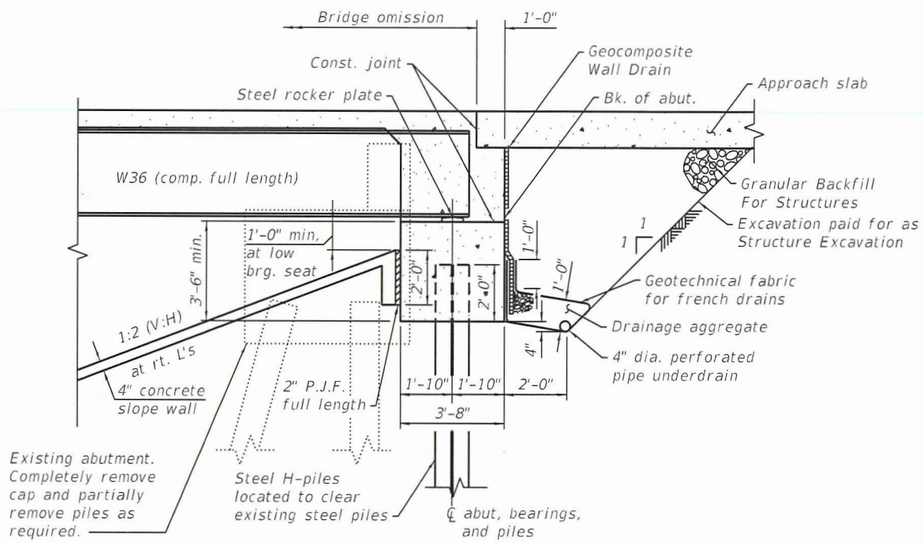

SECTION THROUGH ABUTMENT

(Horizontal dimensions at rt. L's)

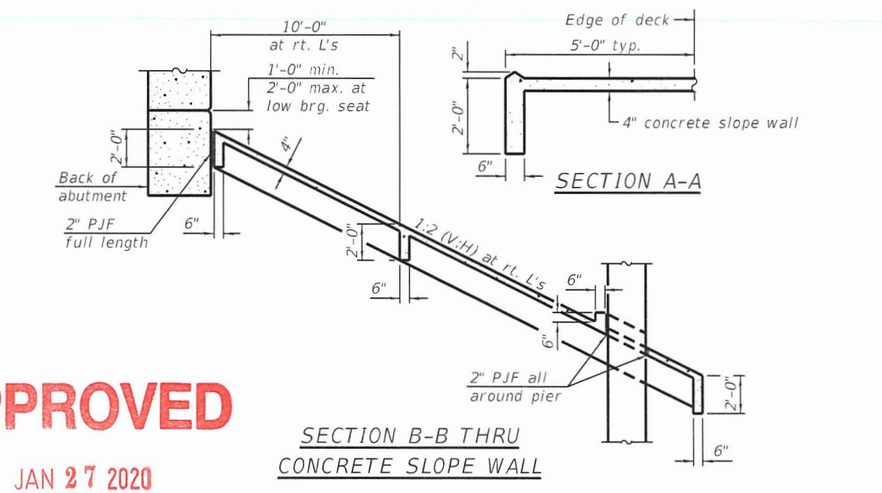

SECTION A-A

SECTION B-B THRU CONCRETE SLOPE WALL

APPROVED

JAN 27 2020

AS A BASIS FOR PREPARATION OF DETAILED PLANS

LVC = 800'

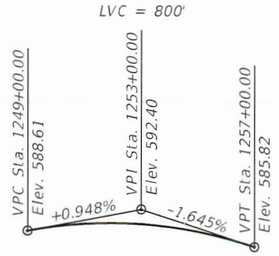

NBL PROFILE GRADE

(Along ℄ lanes)
(PG shows the final elevations after grinding)

LVC = 500'

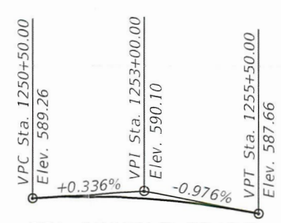

SBL PROFILE GRADE

(Along ℄ lanes)
(PG shows the final elevations after grinding)

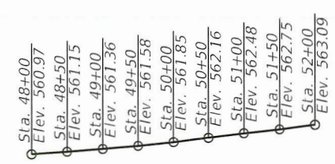

TRACK PROFILE GRADE

(Top of rail)

DETAILS
I-57 OVER NORFOLK SOUTHERN RAILWAY
F.A.I. RTE. 57 - SECTION (41-4)B-1
JEFFERSON COUNTY
STATION 1252+77.71
STRUCTURE NO. 041-0117 (NB)
STRUCTURE NO. 041-0118 (SB)

ESCA CONSULTANTS, INC.

USER NAME = kah	DESIGNED - RTM	08/19	REVISED -	
ESCA PROJECT NO. 1259.07	CHECKED - ELH	08/19	REVISED -	
PLOT SCALE = 0.1667 ' / in.	DRAWN - KAH/SHL	01/20	REVISED -	
PLOT DATE = 1/20/2020	CHECKED - ELH	01/20	REVISED -	

STATE OF ILLINOIS
DEPARTMENT OF TRANSPORTATION

SHEET 2 OF 2 SHEETS

F.A.I. RTE.	SECTION	COUNTY	TOTAL SHEETS	SHEET NO.
57	(41-4)B-1	JEFFERSON	-	
		CONTRACT NO. 78550		
		ILLINOIS	FED. AID PROJECT	

MODEL: PL01
FILE NAME: Y:\IDOT\1259.07_78550\CADD\TSL\041001617-78550-TSL-2.dgn
1/20/2020 2:11:49 PM