Benchmark: BM C A square cut on the northeast wingwall of the Hankes Road Bridge over Lake Run. Elevation = 677.980 (NAVD88)

Existing Structure: Structure No. 045-3073 was built in 1976 as Township Road District 0181A Hankes Road, Section No. 106B-TR. Existing structure is single span reinforced concrete slab with closed abutments. 30'-0" back to back abutment, 30'-0" out to out deck, 20° skew. Existing structure will be removed and replaced. One lane of traffic shall be maintained in each direction on the existing bridge in Stage I. One lane of traffic shall be maintained in each direction on the Stage I side of the propsoed bridge in Stage II.

No Salvage.

APPROVED

AUG 3 2017

~~AS A BASIS FOR~~ PREPARATION OF DETAILED PLANS

DESIGN SPECIFICATIONS

2014 AASHTO LRFD Bridge Design Specifications, 7th Edition, with 2015 & 2016 Interims

DESIGN STRESSES

FIELD UNITS

f'c = 3,500 psi
f'c = 4,000 psi (Concrete Superstructure)
fy = 60,000 psi (Reinforcement)
fy = 50,000 psi (M270 Grade 50W)

HIGHWAY CLASSIFICATION

Hankes Road - FAU 2299
Functional Class: Local Urban Collector
ADT: 5,200 (2010); 21,000 (2040)
ADTT: 109 (2010); 441 (2040)
DHV: 1,500 (2040)
Design Speed: 50 m.p.h.
Posted Speed: 45 m.p.h.
2 -Way Traffic
Directional Distribution: 50/50

LOADING HL-93

Allow 50#/sq. ft. for future wearing surface.

SEISMIC DATA

Seismic Performance Zone (SPZ) = 1
Design Spectral Acceleration at 1.0 sec. (S_{D1}) = 0.090
Design Spectral Acceleration at 0.2 sec. (S_{DS}) = 0.164
Soil Site Class = D

CURVE DATA

(Hankes Road)
Prop. Curve PR_CL_HANKES-2
P.I. Sta. = 37+88.17
Δ = 7° 43' 10" (LT)
D = 0°42' 58"
R = 8,000.00
T = 539.74'
L = 1,077.85'
E = 18.19'
P.C. Sta. = 32+48.43
P.T. Sta. = 43+26.28

**Precore abutment piles 10 feet.

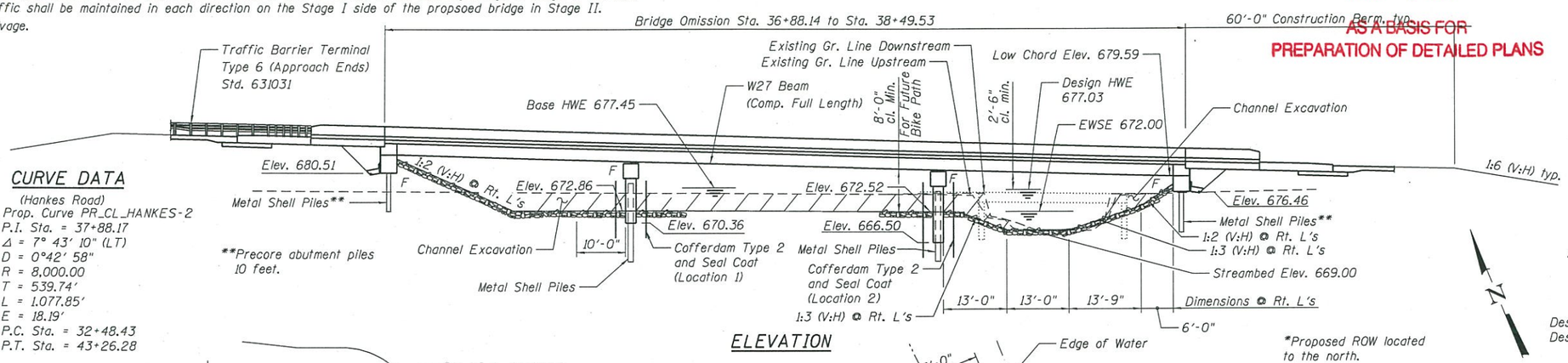

ELEVATION

*Proposed ROW located to the north.

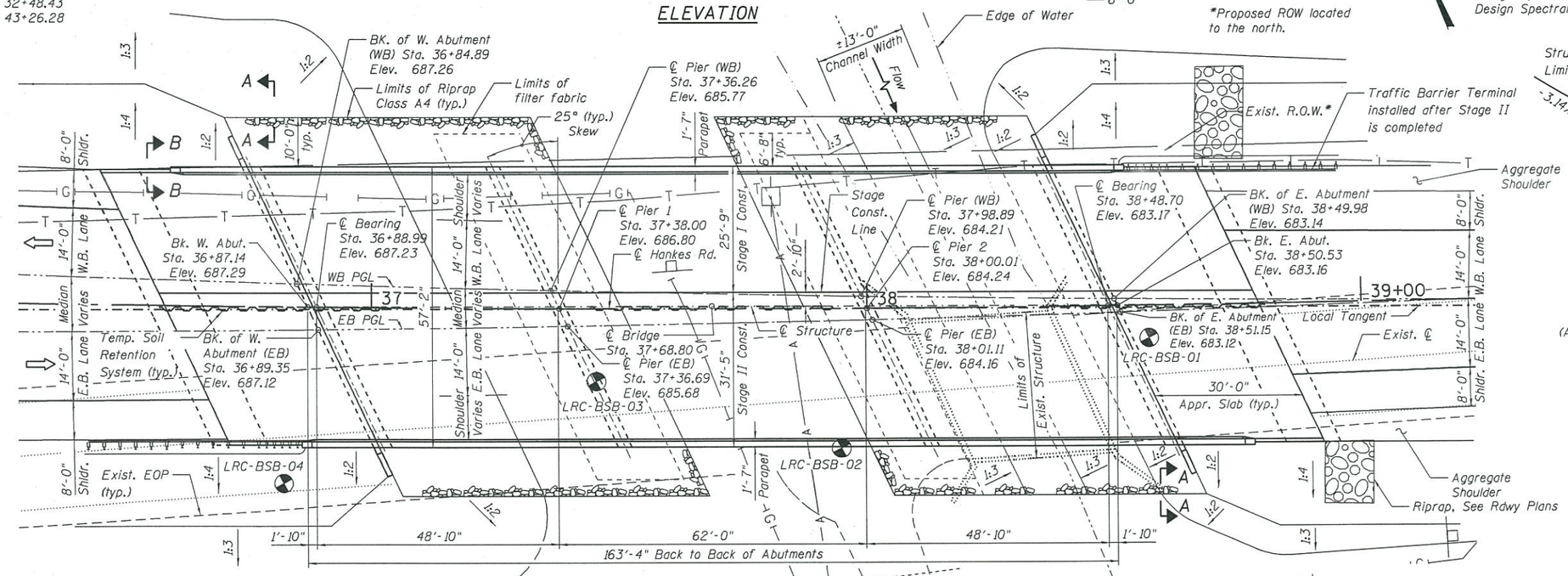

PLAN

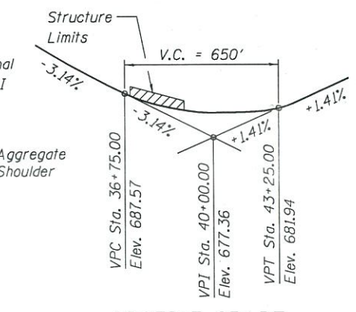

PROFILE GRADE

(Along PGL of EB & WB Hankes Rd.)

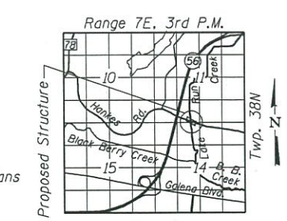

LOCATION SKETCH

WATERWAY INFORMATION

Drainage Area = 14 sq. mi. Existing Overtopping Elev. = 677.79 at Sta. 38+45.65
Proposed Overtopping Elev. = 680.52 at Sta. 41+27.28

Flood Event	Freq. Yr.	Discharge Ft³/s	Waterway Opening-ft² Exist.	Waterway Opening-ft² Prop.	Natural H.W.E. ft.	Head - Ft. Exist.	Head - Ft. Prop.	Headwater Elev. ft. Exist.	Headwater Elev. ft. Prop.
	2	247	108.33	347.45	674.42	0.49	0.23	674.91	674.65
	10	556	168.83	571.05	676.02	1.12	0.23	677.14	676.25
Design	30	801	217.94	718.27	677.03	1.56	0.23	678.59	677.26
	50	893	218.48	719.74	677.04	1.76	0.27	678.80	677.31
Base	100	1054	241.51	780.33	677.45	1.43	0.28	678.88	677.73
Scour Check	200	1222	260.57	825.26	677.75	1.32	0.25	679.07	678.00
Max. Calc.	500	1469	301.57	905.89	678.29	1.11	0.34	679.40	678.63

DESIGN SCOUR ELEVATION TABLE

Event/Limit State	Design Scour Elevations (ft.) W. Abut.	Pier 1	Pier 2	E. Abut.	Item 113
0100	680.51	669.99	669.92	676.46	8
0200	680.51	669.87	669.79	676.46	
Design	680.51	669.99	666.50	676.46	
Check	680.51	669.87	666.50	676.46	

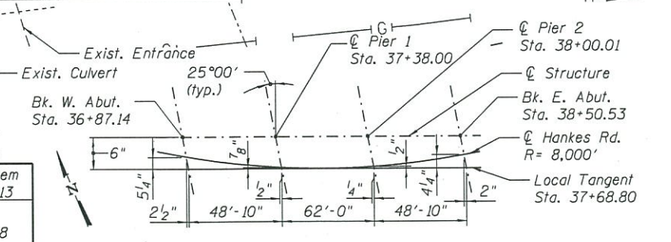

OFFSET SKETCH

GENERAL PLAN
HANKES ROAD OVER LAKE RUN CREEK
F.A.U. 2299 SECTION 61HB-B
KANE COUNTY
STATION 37+68.80
STRUCTURE NO. 045-0204

Bollinger, Lach & Associates, Inc.
ITASCA, ILLINOIS

USER NAME =	DESIGNED - HB	REVISED -	
	CHECKED - JJI	REVISED -	
PLOT SCALE =	DRAWN - GM	REVISED -	
PLOT DATE = 8/3/2017	CHECKED - JJI	REVISED -	

STATE OF ILLINOIS
DEPARTMENT OF TRANSPORTATION

SHEET 1 OF 2 SHEETS

F.A.P. RTE.	SECTION	COUNTY	TOTAL SHEETS	SHEET NO.
573	61HB-B	KANE		

CONTRACT NO. 60W52

ILLINOIS FED. AID PROJECT

FILE NAME = W:\191-144 IDOT IL 56 at Hankes Rd\CADD_Sheets\Structural\TSL Lake Run Creek\D160W52-TSL-Lake Run Creek-General Plan.dgn

APPROVED

AUG 3 2017

AS A BASIS FOR PREPARATION OF DETAILED PLANS

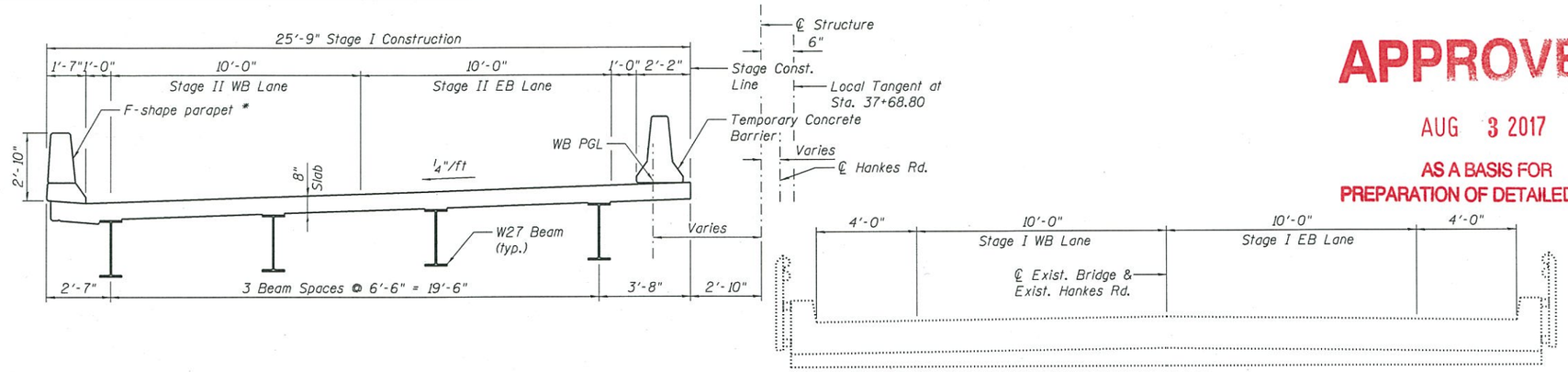

* Temp. Conc. Barrier Stage II Construction, on approach slab ends (See Roadway Plans)

CROSS SECTION - STAGE CONSTRUCTION

(Looking East)

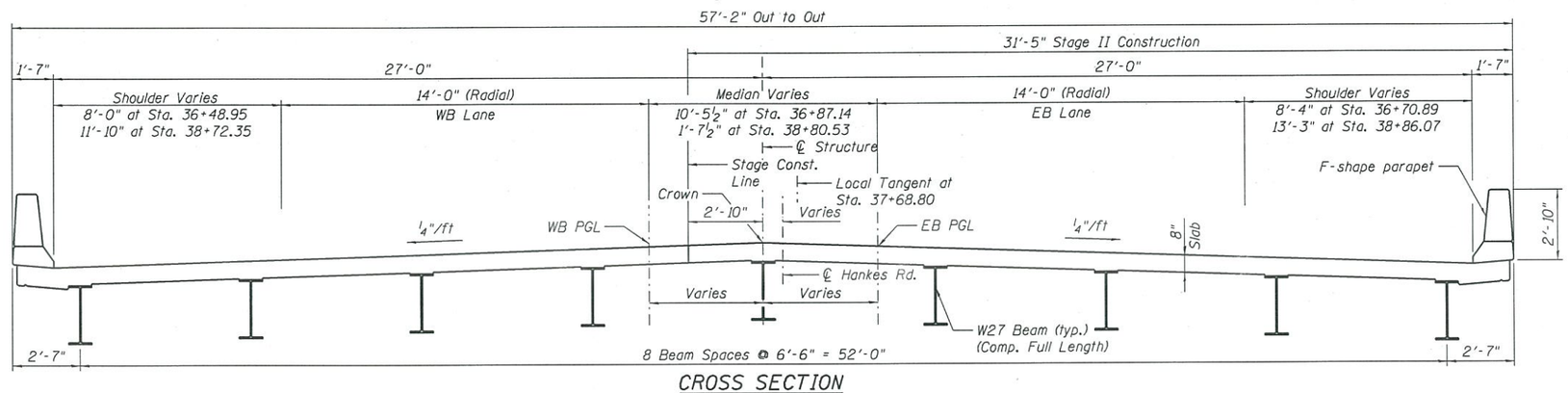

CROSS SECTION

(Looking East)

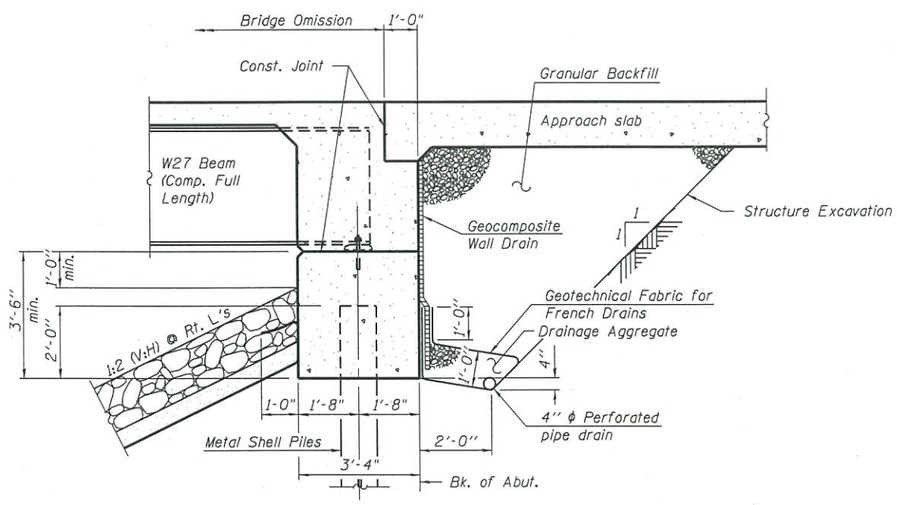

SECTION THRU INTEGRAL ABUTMENT

(Horiz. dim. @ Rt. L's)

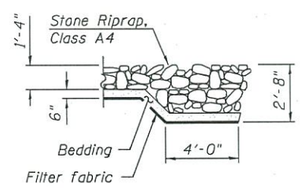

SECTION A-A

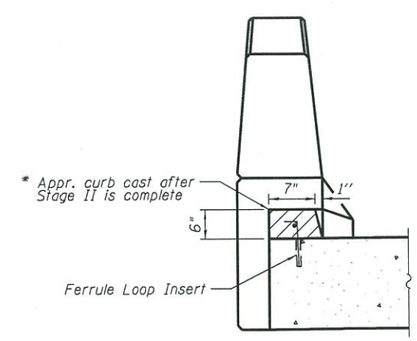

VIEW B-B

(Northwest Appr. Curb)
(Northeast similar)

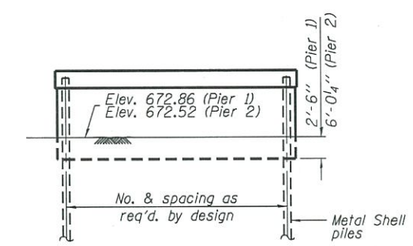

PIER SKETCH

CROSS SECTIONS AND DETAILS
HANKES ROAD OVER
LAKE RUN CREEK
F.A.U. 2299 SECTION 61HB-B
KANE COUNTY
STATION 37+68.80
STRUCTURE NO. 045-0204

Bollinger, Lach & Associates, Inc. ITASCA, ILLINOIS	USER NAME =	DESIGNED - HB	REVISED -	STATE OF ILLINOIS DEPARTMENT OF TRANSPORTATION	F.A.P. RTE. 573	SECTION	COUNTY
		CHECKED - JJI	REVISED -				TOTAL SHEETS #TOT
	PLOT SCALE =	DRAWN - GM	REVISED -				SHEET NO. #STR4
	PLOT DATE = 7/25/2017	CHECKED - JJI	REVISED -	SHEET 2 OF 2 SHEETS			CONTRACT NO. 60W52
							ILLINOIS FED. AID PROJECT

FILE NAME = W:\191-144 IDOT IL 56 at Hankes Rd\CADD_Sheets\Structural\TSL Lake Run Creek\01EBW52_TSL_Lake Run Creek_Details.dgn