Bench Mark: Bench tie spike in 1st PP north of culvert on west side of US 20 Sta 8+60.28 28.29'LT, Elevation 945.81

Existing Structure: SN 045-0252 originally constructed in 1920 as a single cast-in-place box culvert 6' wide and 2' high and 32'-5" long. The culvert was lengthened approximately by 6' on the east side and approximately 4' on the westside with 44"x28" elliptical corrugated metal pipe. A Temporary structure to be constructed during pre-stage. Both bounds of traffic shall utilize one lane during each stage construction controlled by temporary traffic signal.

Salvage: Existing Steel plate to be salvaged to D1 maintenance.

Precast Alternative is not allowed

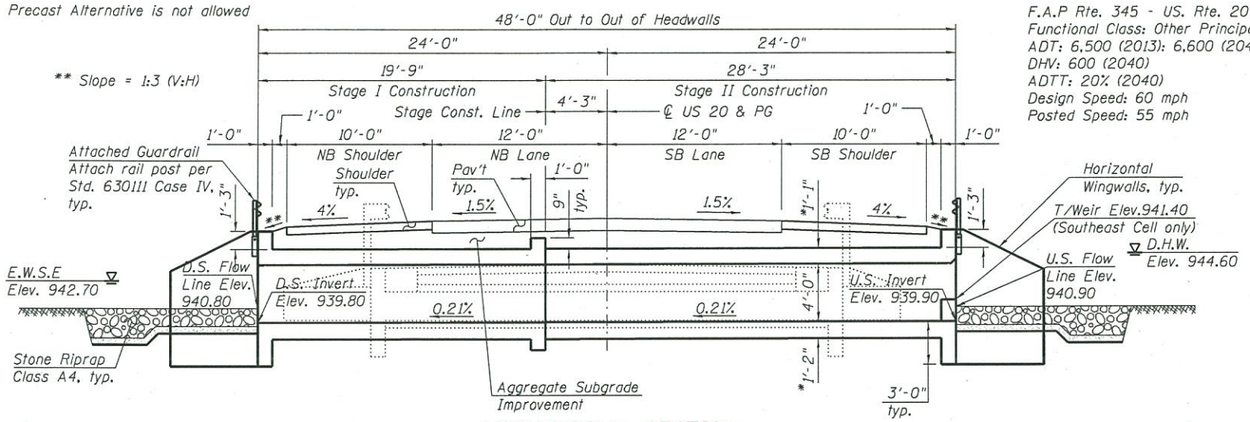

LONGITUDINAL SECTION

(Looking Southeast)

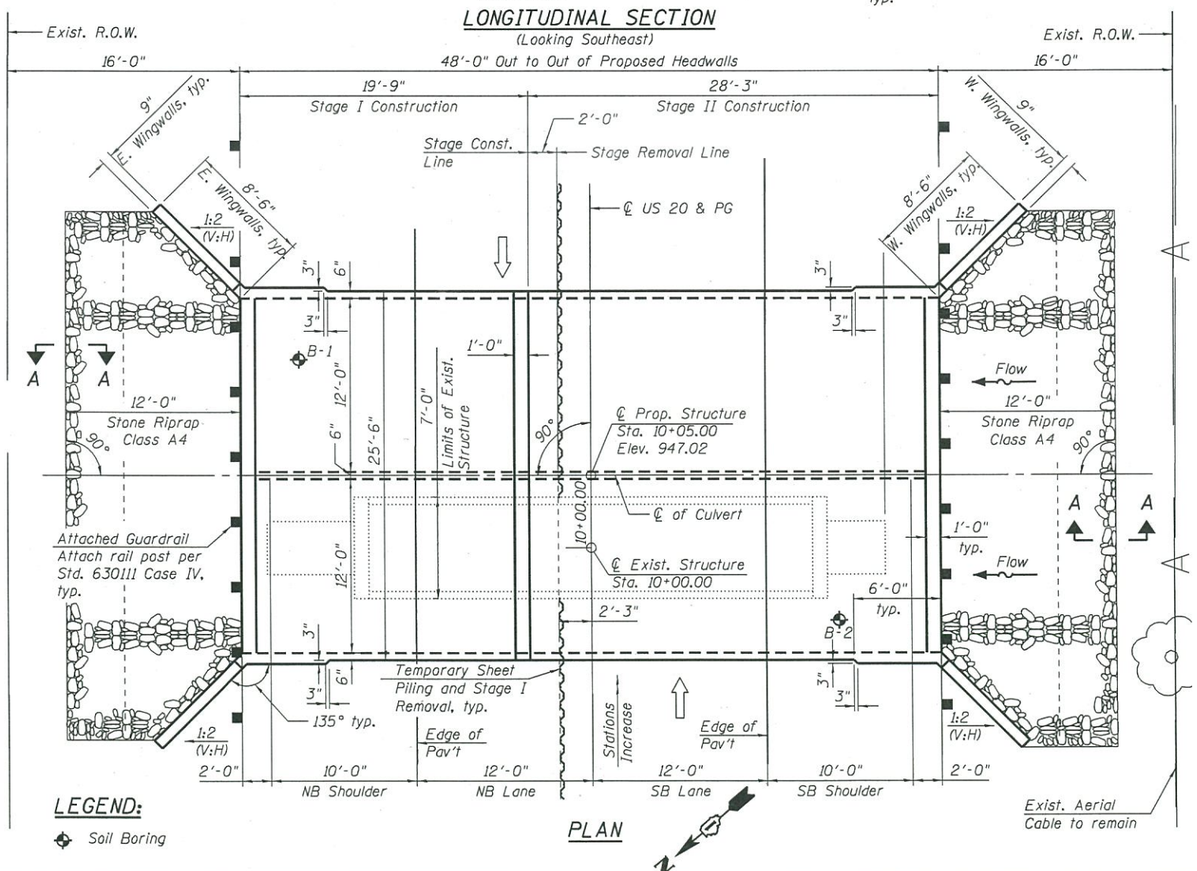

PLAN

LEGEND:

Soil Boring

HIGHWAY CLASSIFICATION

F.A.P Rte. 345 - US. Rte. 20
Functional Class: Other Principal Arterial
ADT: 6,500 (2013): 6,600 (2040)
DHV: 600 (2040)
ADTT: 20% (2040)
Design Speed: 60 mph
Posted Speed: 55 mph

WATERWAY INFORMATION

Drainage Area = 358 acres

Existing Overtopping Elev. = 944.5 at Sta. 9+00
Proposed Overtopping Elev. = 946.5 at Sta. 9+00

Flood	Freq. Yr.	Discharge C.F.S	Opening Sq. Ft. Exist.	Opening Sq. Ft. Prop.	Nat. H.W.E.	Head - Ft. Exist.	Head - Ft. Prop.	Headwater El. Exist.	Headwater El. Prop.
	10	136	6.4	51.6	943.3	1.7	0.3	945.0	943.6
Design	50	269	6.4	66.0	944.0	1.3	0.6	945.3	944.6
Base	100	351	6.4	66.0	944.4	1.0	0.9	945.4	945.3
Overtop Existing		42	6.4					944.5	
Overtop Proposed		483		66.0					946.5
Max. Calc.	500	461	6.4	66.0	944.8	0.7	1.5	945.5	946.3

10-year velocity through the existing culvert = 7.4 fps.
10-year velocity through the proposed culvert = 2.6 fps.
2 Year Peak Flow (Q) = 60.70 cfs
Estimated Water Surface Elevation = 942.7 ft

NOTES:

1. For Stage Construction, see Sheet 2.

2. Low Flow weir is located at the Upstream (Southeast end) Southeast cell end elevation only.

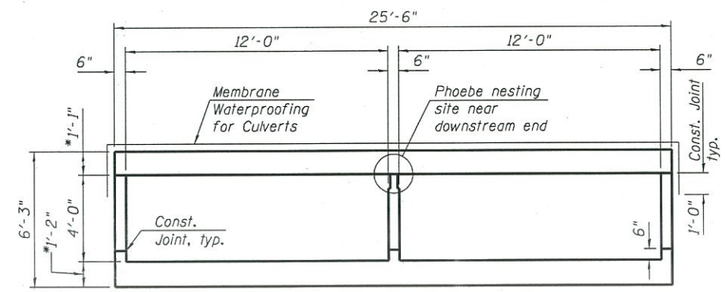

SECTION THRU BARREL

* Slab thickness may be refined in final design

DESIGN SPECIFICATIONS

2014 AASHTO LRFD Bridge Design Specifications, 7th Edition, with 2015 and 2016 Interims

LOADING HL-93

Allow 50 lb/sq. ft. for future wearing surface.

DESIGN STRESSES

FIELD UNITS

f'_c = 3,500 psi (Concrete)
f_y = 60,000 psi (Reinforcement)

APPROVED

JUL 13 2017

AS A BASIS FOR PREPARATION OF DETAILED PLANS

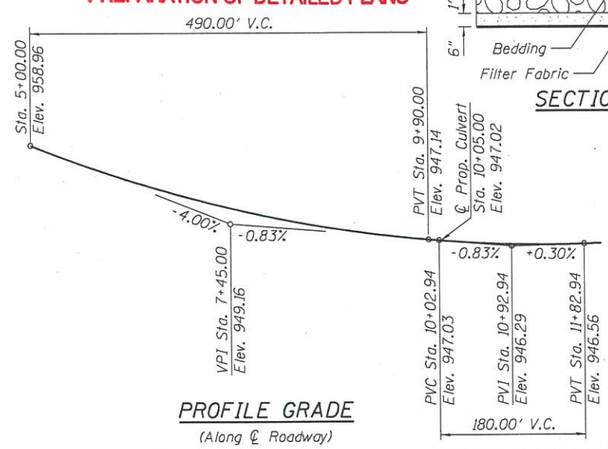

PROFILE GRADE

(Along ℄ Roadway)

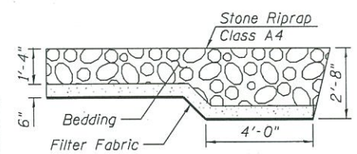

SECTION A-A

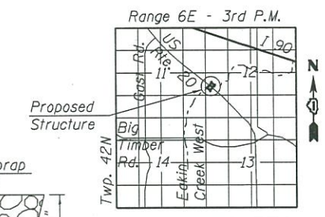

LOCATION SKETCH

GENERAL PLAN
U.S. RTE. 20 OVER
UNNAMED DITCH
(1.2 MI SOUTH OF I-90)
F.A.P. 345 (US 20/ GRANT HWY)
SEC. 2015-063B
KANE COUNTY
STATION 10+05.00
STRUCTURE NO. 045-2101

HBM ENGINEERING GROUP, LLC

GPE.dgn	DESIGNED - MI, SK	REVISED -	
USER NAME = lisa.buntin	DRAWN - SK	REVISED -	
PLOT SCALE = 10:0 ':' / in.	CHECKED - MI, LAB	REVISED -	
PLOT DATE = 7/12/2017	DATE - 07/11/2017	REVISED -	

STATE OF ILLINOIS
DEPARTMENT OF TRANSPORTATION

SCALE: SHEET 1 OF 2 SHEETS STA. TO STA.

F.A.P. RTE.	SECTION	COUNTY	TOTAL SHEETS	SHEET NO.
345	2015-063B	KANE		
		CONTRACT NO. 62B31		
	ILLINOIS	FED. AID PROJECT		

FILE PATH = P:\1695-677 IDOT PTB163 Item 9 - Terra\Work Order #9 - US20 Over Unnamed Ditch\TSL Plans\GPE.dgn

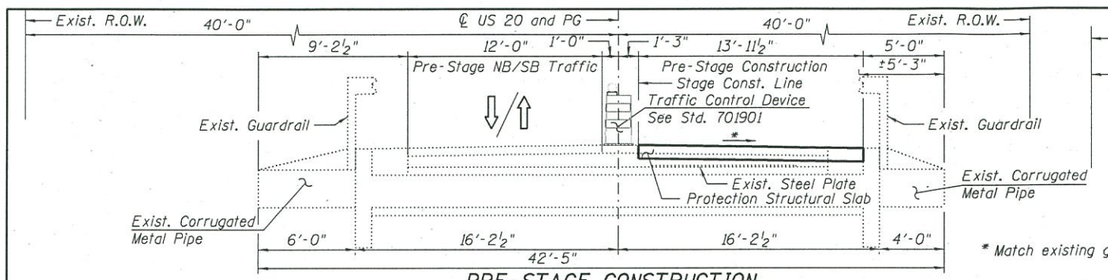

PRE-STAGE CONSTRUCTION
(Looking Southeast)

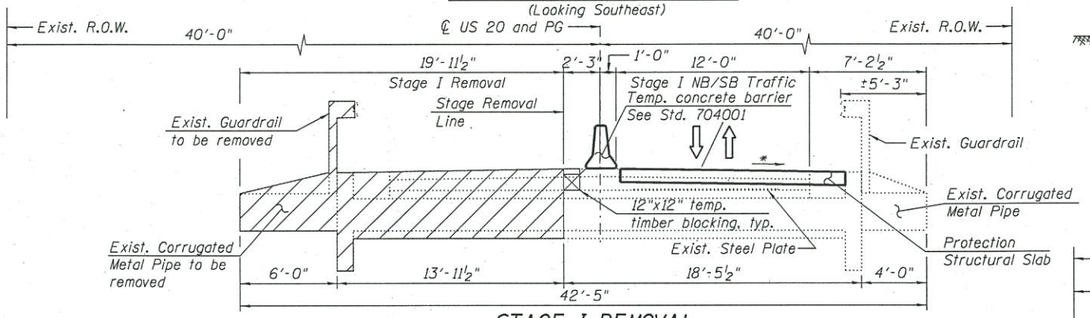

STAGE I REMOVAL
(Looking Southeast)

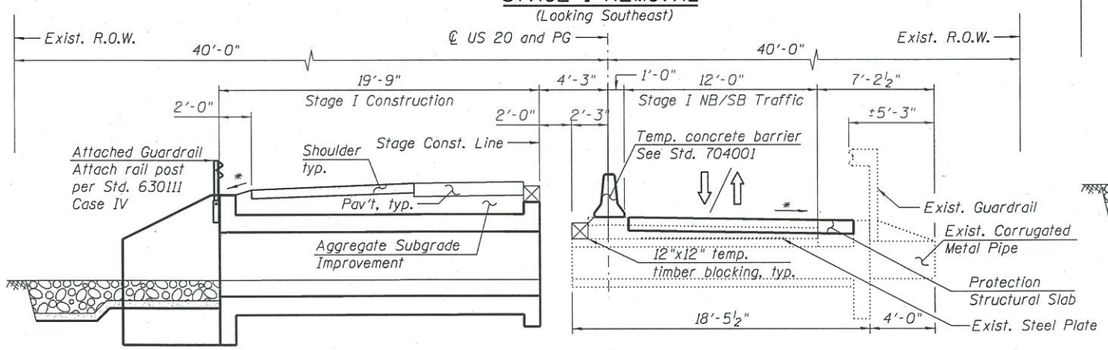

STAGE I CONSTRUCTION
(Looking Southeast)

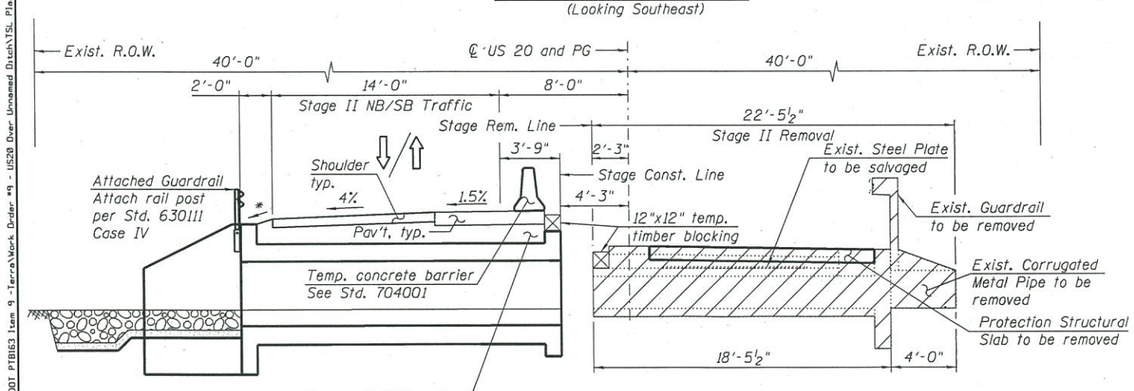

STAGE II REMOVAL
(Looking Southeast)

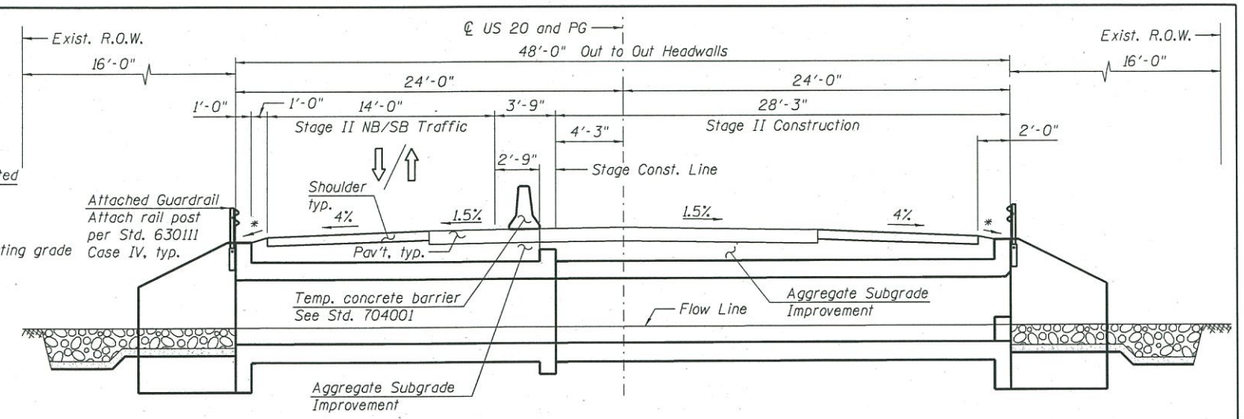

STAGE II CONSTRUCTION
(Looking Southeast)

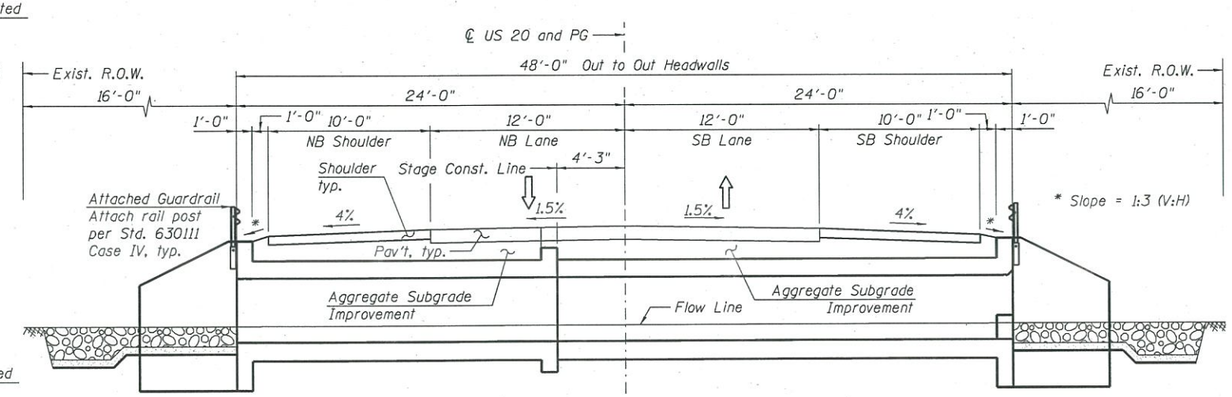

FINAL CROSS SECTION
(Looking Southeast)

APPROVED
JUL 13 2017
AS A BASIS FOR PREPARATION OF DETAILED PLANS

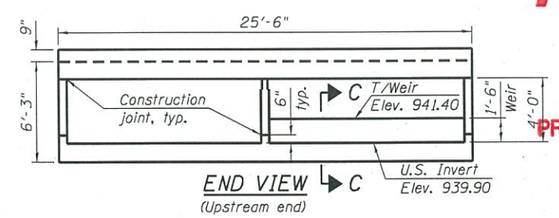

END VIEW
(Upstream end)

LEGEND:

Removal of existing structure

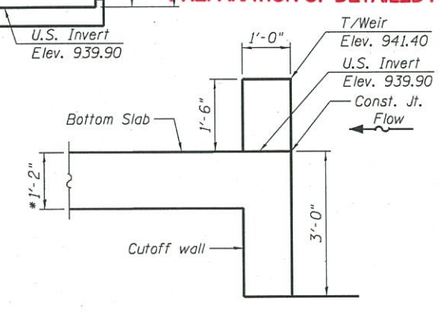

SECTION C-C

* Subject to refinement during final design

STAGE CONSTRUCTION
U.S. RTE. 20 OVER
UNNAMED DITCH
(1.2 MI SOUTH OF I-90)
F.A.P. 345 (US 20/GRANT HWY)
SEC. 2015-063B
KANE COUNTY
STATION 10+05.00
STRUCTURE NO. 045-2101

FILE PATH = P:\1605-677 IDOT PTB163 Item 9 - Terra\Work Order #9 - US20 Over Unnamed Ditch\TSL Plans\Stage.dgn

HBM ENGINEERING GROUP, LLC	Stage.dgn	DESIGNED - MI, SK	REVISED -	STATE OF ILLINOIS DEPARTMENT OF TRANSPORTATION		F.A.P. RTE.	SECTION	COUNTY	TOTAL SHEETS / SHEET NO.
	USER NAME = lisa.buntin	DRAWN - SK	REVISED -			345	2015-063B	KANE	
	PLOT SCALE = 40.0000 ':' / in.	CHECKED - MI, LAB	REVISED -					CONTRACT NO. 62B31	
	PLOT DATE = 7/12/2017	DATE - 07/11/2017	REVISED -		SCALE: SHEET 2 OF 2 SHEETS STA. TO STA.			ILLINOIS FED. AID PROJECT	