Benchmarks: BM 108, Cut "□" in SE corner of North Wingwall at West Abutment of SN 046-0089. Elevation = 665.75, FAI 57 Baseline Station 548+77.12, 306.43' RT.

Existing Structure: Structure No. 046-0089 was originally constructed in 1968 as Section 46-4HVB. In 2002, deck repairs, expansion joint reconstruction, bearing replacement, and structural steel repairs were completed. The steel beams were painted in 2008. The superstructure includes two bridge units: a two-span continuous unit and a four-span continuous unit, each consisting of non-composite rolled steel beams with a 7" cast-in-place concrete deck. The substructure consists of stub abutments supported by driven steel piles and hammerhead piers supported by driven steel piles. The back-to-back of abutments length measures 432'-10" and the out-to-out of deck width measures 30'-0". The span lengths are 56'-2" and 58'-10" (unit 1), and 66'-5", 87'-0", 87'-9", and 70'-0" (unit 2). The structure is skewed 18° 26' 25" left forward. The road will be closed and traffic detoured during construction.

No Salvage.

SCOPE OF WORK

1.) Remove and replace the existing concrete deck and expansion joints.
2.) Jack and replace the existing bearings on the west side of Pier No. 2.
3.) Zone clean and paint the existing structural steel only at the deck joints and on the fascia beams, from the East Abutmet to Pier No. 3.
4.) Install stud shear connectors in order to make the existing steel beams composite with the cast-in-place, reinforced concrete deck.
5.) Retrofit the existing wingwalls to constant slope parapets to match superstructure.
6.) Repair Pier 2 using Structural Repair of Concrete and Epoxy Crack Sealing as needed.
7.) Repair the existing concrete slope wall.

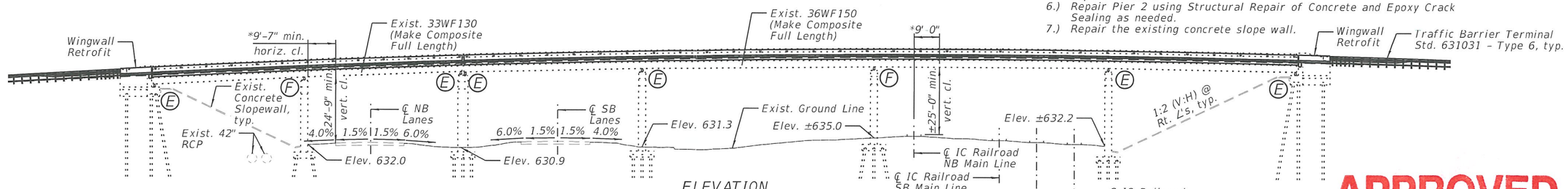

ELEVATION

*Dimensions @ Rt. ∠'s to underpassing feature

NOTE:
No freeefall deck drains will be permitted in the span over the tracks or within 10 ft. of cross arms of a railroad pole line.

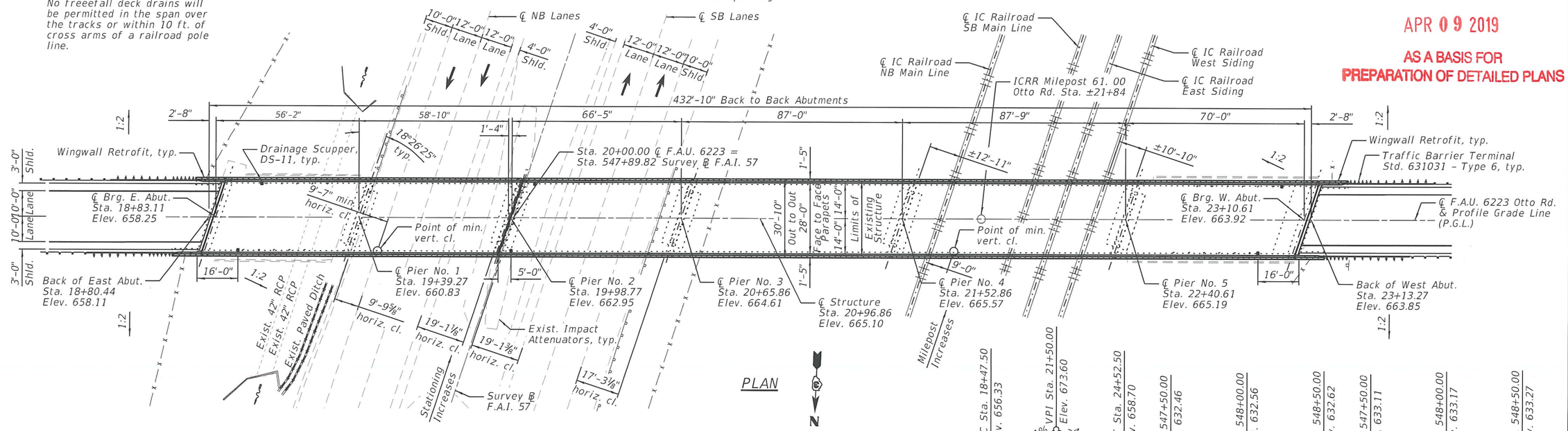

PLAN

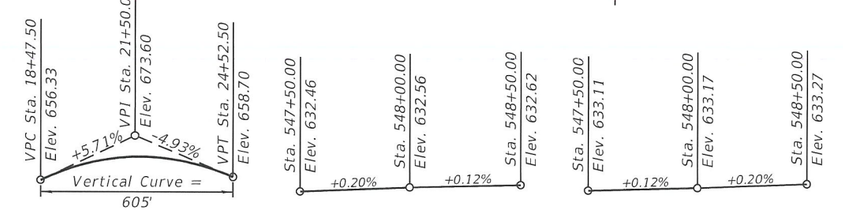

PROFILE GRADE
(Along ℄ Otto Road)

I-57 NB PROFILE GRADE
(Along ℄ NB Lanes)

I-57 SB PROFILE GRADE
(Along ℄ SB Lanes)

APPROVED
APR 09 2019
AS A BASIS FOR PREPARATION OF DETAILED PLANS

DESIGN SPECIFICATIONS

2002 AASHTO Standard Specifications for Highway Bridges

LOADING HS20-44

No allowance for future wearing surface

SEISMIC DATA

Seismic Performance Category (SPC) = A
Bedrock Acceleration Coefficient (A) = 0.042
Site Coefficient (S) = 1.0

EXISTING DESIGN STRESSES

FIELD UNITS:

fc = 1,400 psi (Superstructure and Substructure)
fc = 1,200 psi (Deck Slab)
fs = 20,000 psi (Reinforcement)
fs = 20,000 psi (Structural Steel, A-36)
vc = 75 psi (Footings)
n = 10

PROPOSED DESIGN STRESSES

FIELD UNITS:

f'c = 3,500 psi
f'c = 4,000 psi (Superstructure Concrete)
fy = 60,000 psi (Reinforcement)
fy = 36,000 psi (Structural Steel)

HIGHWAY CLASSIFICATION

ROUTE ON

F.A.U. Route 6223 (Otto Road)
Functional Class: Major Collector
A.D.T.: 950 (2020), 1,140 (2040)
D.H.V.: 95
A.D.T.T.: 150 (2020), 180 (2040)
Design Speed: 40 M.P.H.
Posted Speed: 40 M.P.H.
Two Way Traffic
Directional Distribution: 50/50

HIGHWAY CLASSIFICATION

ROUTE UNDER

F.A.I. Route 57 (I-57)
Functional Class: Interstate
A.D.T.: 20,100 (2020), 24,120 (2040)
D.H.V.: 1,910 (2020), 2,291 (2040)
A.D.T.T.: 7,250 (2020), 8,700 (2040)
Design Speed: 70 M.P.H.
Posted Speed: 70 M.P.H.
Two Way Traffic
Directional Distribution: 50/50

LOCATION SKETCH

OTTO ROAD OVER
I-57 AND IC RAILROAD
F.A.U. 6223
SECTION 46-(3,4)RS-4 & I-1
KANKAKEE COUNTY
STATION 20+96.86
STRUCTURE NO. 046-0089

Farnsworth GROUP
2709 McGRAW DRIVE
BLOOMINGTON, ILLINOIS 61704
(309) 663-8435 / info@f-w.com

	DESIGNED - JCZ	REVISED
	CHECKED - JML	REVISED
	DRAWN - SRL	REVISED
DATE - 07/26/18	CHECKED - DJM	REVISED

STATE OF ILLINOIS
DEPARTMENT OF TRANSPORTATION

GENERAL PLAN
STRUCTURE NO. 046-0089
SHEET NO. 1 OF 2 SHEETS

F.A.I. RTE.	SECTION	COUNTY	TOTAL SHEETS	SHEET NO.
57	46-(3,4)RS-4 & I-1	KANKAKEE	2	1
		CONTRACT NO. 66F09		
		ILLINOIS FED. AID PROJECT		

APPROVED

APR 09 2019

AS A BASIS FOR PREPARATION OF DETAILED PLANS

NOTE:

Place scuppers approximately 1½" under front edge of parapet as needed for adequate clearance to beam flange.

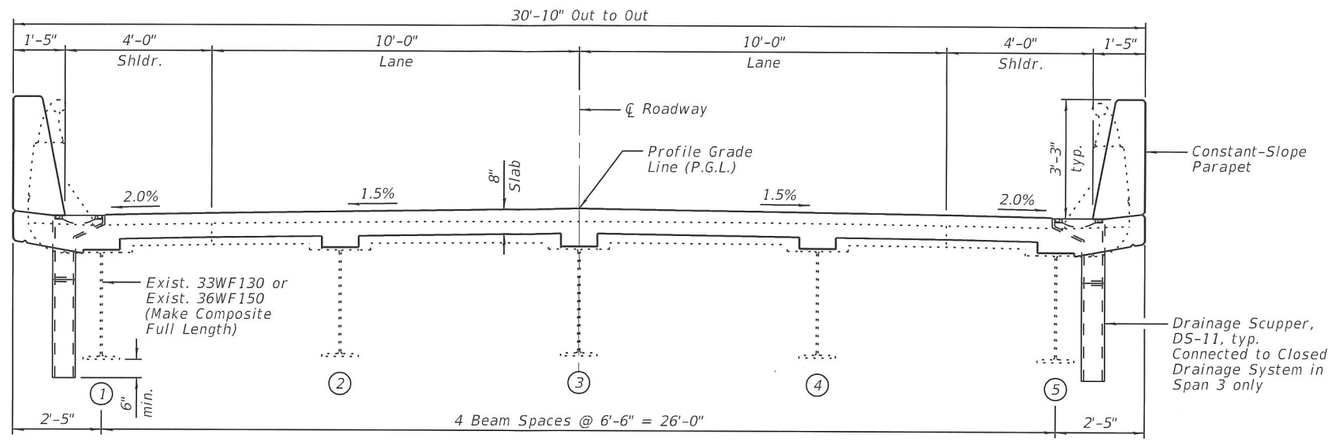

CROSS SECTION

(Looking West)

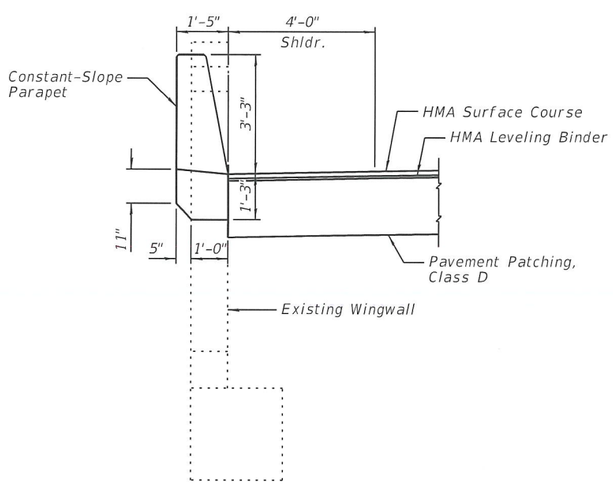

WINGWALL RETROFIT SECTION

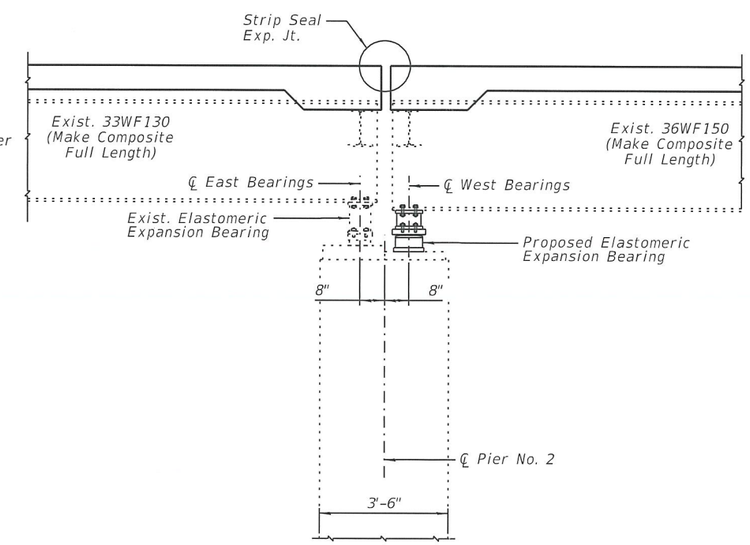

SECTION THRU PIER NO. 2

(Horizontal dimensions @ Rt. ∠'s)

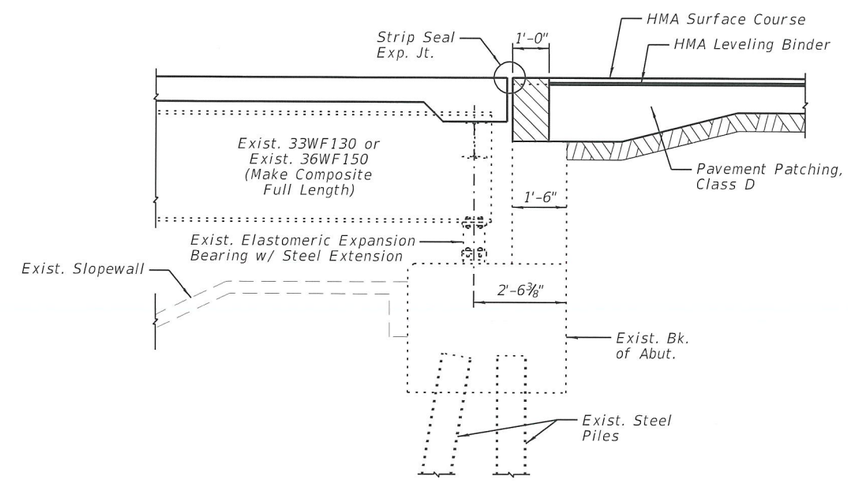

SECTION THRU ABUTMENT

(Horizontal dimensions @ Rt. ∠'s)

OTTO ROAD OVER
I-57 AND IC RAILROAD
F.A.U. 6223
SECTION 46-(3,4)RS-4 & I-1
KANKAKEE COUNTY
STATION 20+96.86
STRUCTURE NO. 046-0089

Farnsworth GROUP 2709 McGRAW DRIVE BLOOMINGTON, ILLINOIS 61704 (309) 663-8435 / info@f-w.com		DESIGNED - JCZ	REVISED
		CHECKED - JML	REVISED
		DRAWN - SRL	REVISED
	DATE - 07/26/18	CHECKED - DJM	REVISED

STATE OF ILLINOIS
DEPARTMENT OF TRANSPORTATION

DETAILS
STRUCTURE NO. 046-0089
SHEET NO. 2 OF 2 SHEETS

F.A.I. RTE.	SECTION	COUNTY	TOTAL SHEETS	SHEET NO.
57	46-(3,4)RS-4 & I-1	KANKAKEE	2	2
		CONTRACT NO. 66F09		
		ILLINOIS FED. AID PROJECT		