Benchmark: Point 8528, Northing 1621955.641 & Easting 1121273.357, Cut "X" in concrete Median on IL Route 17 approximately 50' west of Existing Southbound Interstate 57 Structure 046-0007 over Illinois Route 17. Elev. 654.97

Existing Structures: Dual structures carrying Interstate 57 over Illinois Route 17 (East Court Street) existing SN 046-0006 (NB) & 046-0007 (SB) were originally constructed in 1955 and rehabilitated in 1989. Each of these structures are 3 spans with 166'-1" back to back of abutment length and 51'-2" out to out width. The superstructures are reinforced concrete decks with composite steel stringers in the positive moment region. The substructure consists of a combination of 1955 and 1989 reinforced concrete construction. The 1955 portion of the existing structures is supported by spread footings while the 1989 construction is supported by steel H-piles. Construction shall be staged so that four lanes remain open at all times.

No Salvage

Proposed Structure: The proposed structure SN 046-0154 shall be constructed to replace the existing dual structures. The proposed structure shall be constructed wide enough to accommodate an Proposed Condition. The Proposed Condition will consist of two lanes and two shoulders in each direction. At a future date, the proposed structure shall be widened to an Future Condition. The Future Condition shall consist of three lanes and two shoulders in each direction. The structure's superstructure and substructure units shall be structurally designed to support loads for the Future Condition. The Abutment Caps and Pier Footings will be constructed to the Future Condition during the Proposed Condition Construction.

DESIGN SPECIFICATIONS

2017 AASHTO LRFD Bridge Design Specifications, 8th Edition

LOADING HL-93

Allow 50#/sq. ft. for future wearing surface.

SEISMIC DATA

Seismic Performance Zone (SPZ) = 1
Design Spectral Acceleration at 1.0 sec. (S_{D1}) = 0.073g
Design Spectral Acceleration at 0.2 sec. (S_{DS}) = 0.125g
Soil Site Class = C

DESIGN STRESSES

FIELD UNITS

f'c = 3,500 psi
f'c = 4,000 psi (Superstructure Concrete)
fy = 60,000 psi (Reinforcement)
fy = 50,000 psi (M270 Grade 50)

HIGHWAY CLASSIFICATION

F.A.I. Route 57
Functional Class: Interstate
ADT: 28,000 (2016); 37,675 (2040)
DHV: 2,205 (2016); 2,636 (2040)
ADTT: 32% (2016); 28% (2040)
Design Speed: 75 m.p.h.
Posted Speed: 70 m.p.h.
2-Way Traffic
Directional Distribution: 49 (SB); 51 (NB)

HIGHWAY CLASSIFICATION

F.A.P. Rte. 330 (Illinois Rte. 17)
Functional Class: Other Principal Arterial
ADT: 15,200 (2016); 24,500 (2040)
DHV: 1,274 (2016); 1,869 (2040)
ADTT: 11% (2016); 17% (2040)
Design Speed: 35 m.p.h.
Posted Speed: 30 m.p.h.
2-Way Traffic
Directional Distribution: 57 (SB); 43 (NB)

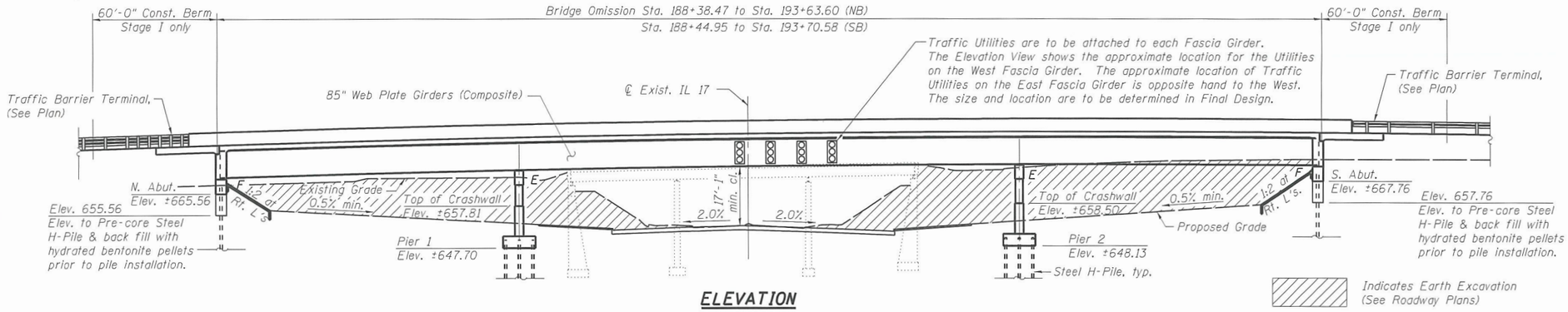

ELEVATION

APPROVED
FEB 21 2019
AS A BASIS FOR PREPARATION OF DETAILED PLANS

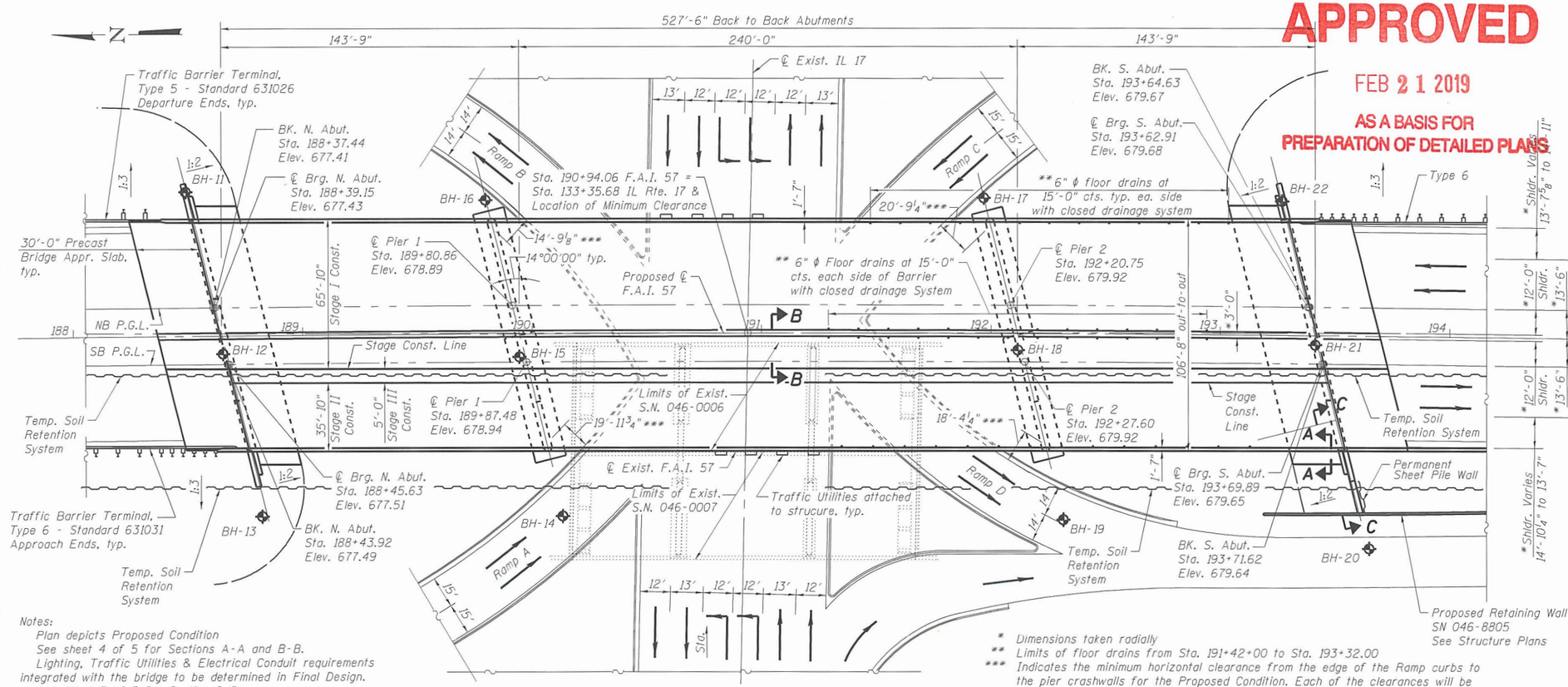

PLAN

Notes:
Plan depicts Proposed Condition
See sheet 4 of 5 for Sections A-A and B-B.
Lighting, Traffic Utilities & Electrical Conduit requirements integrated with the bridge to be determined in Final Design.
See sheet 5 of 5 for Section C-C.

* Dimensions taken radially
** Limits of floor drains from Sta. 191+42+00 to Sta. 193+32.00
*** Indicates the minimum horizontal clearance from the edge of the Ramp curbs to the pier crashwalls for the Proposed Condition. Each of the clearances will be reduced to various dimensions for the Future Condition. The minimum horizontal clearance for the Future Condition will be 8'-4⅝".

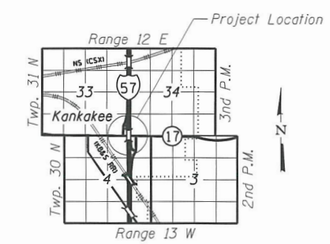

LOCATION SKETCH

GENERAL PLAN
I-57 OVER ILLINOIS ROUTE 17 (EAST COURT STREET)
F.A.I. RTE. 57 - SEC. (46-3)HBK
KANKAKEE COUNTY
STATION 190+94.06
STRUCTURE NO. 046-0154 (NB) & (SB)

FILE NAME = S:\Projects\411-8805-GRY I-57 SPU\Bridge\DGN\TSL Bridge 157 over IL 17 SPU\ex84608086-66863-001-TSL1.dgn

LOCHMUELLER GROUP
1928 S.W. Bradley Rd. Smith Erker
Troy, IL 62294
PHONE: 618.667.1400

USER NAME = bseibel	DESIGNED - CJF	REVISED	
Illinois Design Firm Number 184.001670	CHECKED - ACS	REVISED	
PLOT SCALE =	DRAWN - WS	REVISED	
PLOT DATE = 2/12/2019 8:42:42 AM	CHECKED - ACS	REVISED	

STATE OF ILLINOIS
DEPARTMENT OF TRANSPORTATION

SHEET NO. 1 OF 5 SHEETS

F.A.I. RTE.	SECTION	COUNTY	TOTAL SHEETS	SHEET NO.
57	(46-3)HBK	KANKAKEE		
STRUCTURE NUMBER 046-0154		CONTRACT NO. 66863		
		ILLINOIS FED. AID PROJECT		

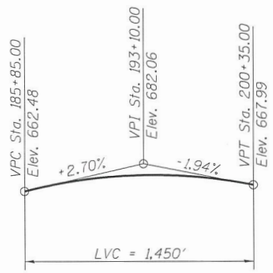

PROFILE GRADE
(Existing F.A.I. 57)

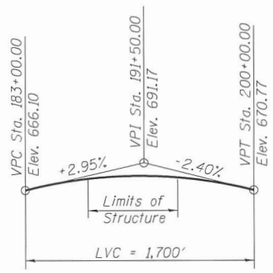

PROFILE GRADE
(Proposed F.A.I. 57 NB & SB)

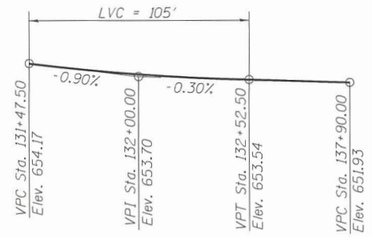

PROFILE GRADE
(Proposed IL Rte. 17)

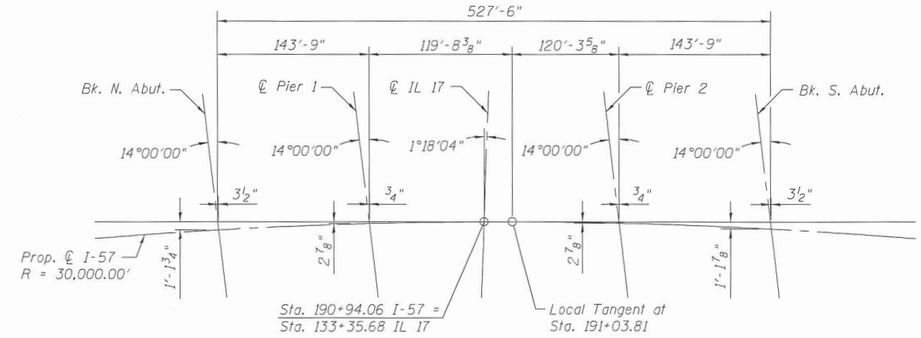

OFFSET SKETCH
(Dimensions along local tangent to I-57)

HORIZONTAL CURVE DATA

F.A.I. Route 57
P.I. Sta. = 189+74.14
Δ = 2°52'07" (RT.)
D = 0°11'28"
R = 30,000.00'
T = 751.18'
L = 1,502.04'
E = 9.40'
e = NC
T.R. = NA
S.E. Run = NA
P.C. Sta. = 182+22.96
P.T. Sta. = 197+25.00

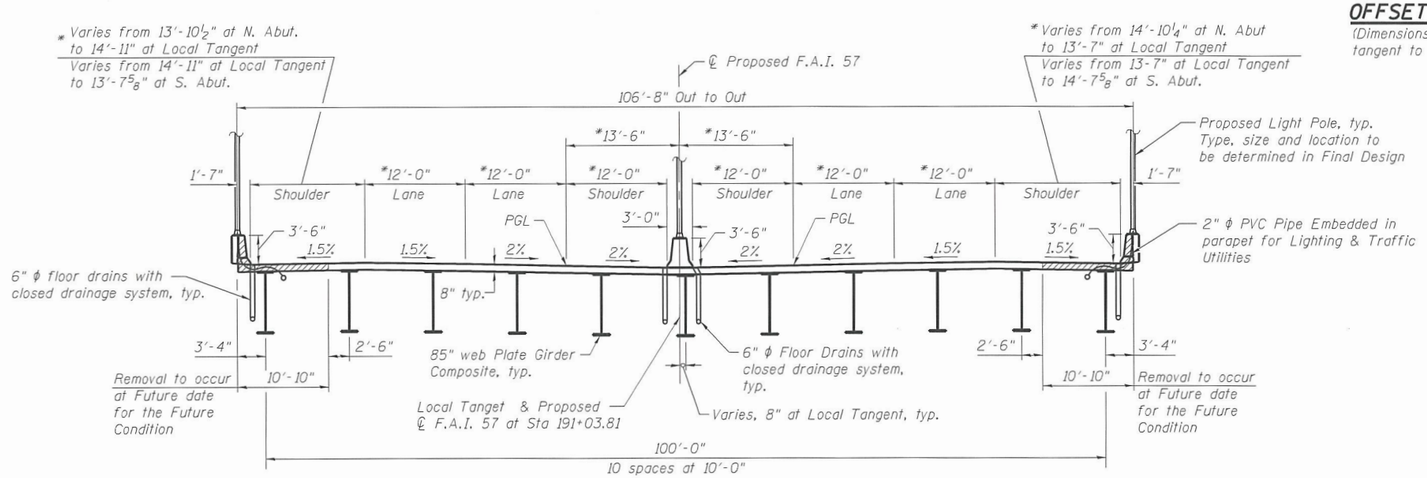

TYPICAL SECTION - PROPOSED CONDITION
(Looking South)

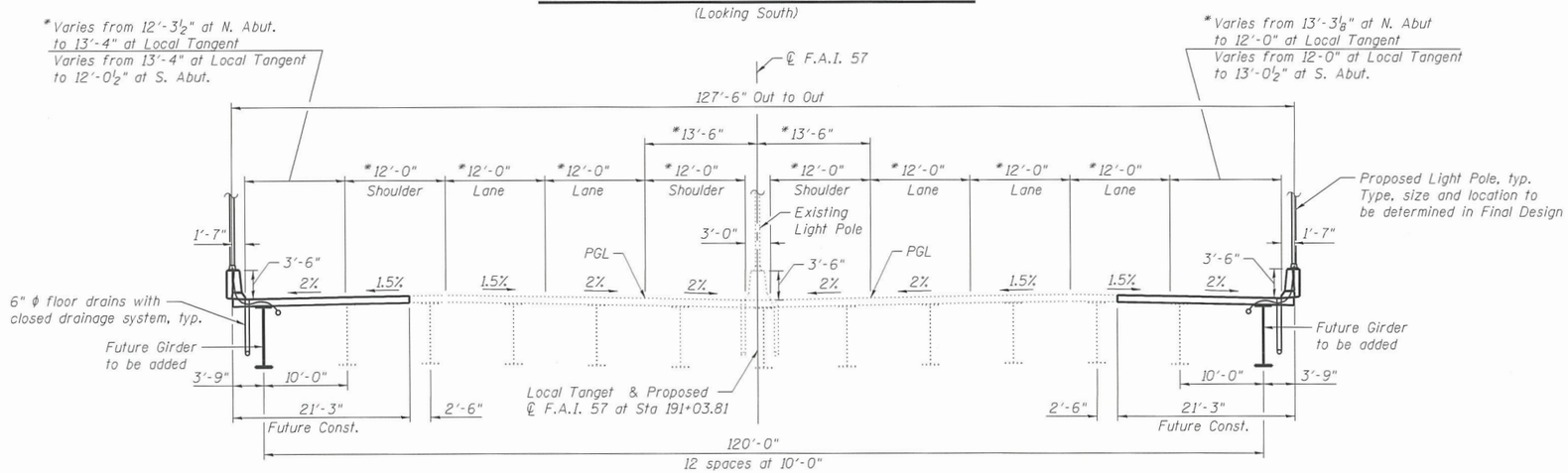

TYPICAL SECTION - FUTURE FUTURE CONDITION
(Looking South)

APPROVED
FEB 21 2019
AS A BASIS FOR
PREPARATION OF DETAILED PLANS

Note:
* Indicates dimensions taken at Rt. angles to ℄ F.A.I. Rte. 57

GENERAL DATA
I-57 OVER ILLINOIS ROUTE 17
(EAST COURT STREET)
F.A.I. RTE. 57 - SEC. (46-3)HBK
KANKAKEE COUNTY
STATION 190+94.06
STRUCTURE NO. 046-0154 (NB) & (SB)

FILE NAME = S:\Projects\411-0005-BHY I-57 SPU1\Bridge\OGN\TSL Bridge 157 over IL 17 SPU1\ex0460006-66863-002-TSKL.dgn

LOCHMUELLER GROUP
1928 S.N. Bradley R. Smith Drive
Troy, IL 62294
PHONE: 618.667.1400

USER NAME = bseibel	DESIGNED - CJF	REVISED	
Illinois Design Firm Number 184.001670	CHECKED - ACS	REVISED	
PLOT SCALE =	DRAWN - WS	REVISED	
PLOT DATE = 2/12/2019 8:42:42 AM	CHECKED - ACS	REVISED	

STATE OF ILLINOIS
DEPARTMENT OF TRANSPORTATION

SHEET NO. 2 OF 5 SHEETS

F.A.I. RTE.	SECTION	COUNTY	TOTAL SHEETS	SHEET NO.
57	(46-3)HBK	KANKAKEE		
STRUCTURE NUMBER 046-0154		CONTRACT NO. 66863		
	ILLINOIS	FED. AID PROJECT		

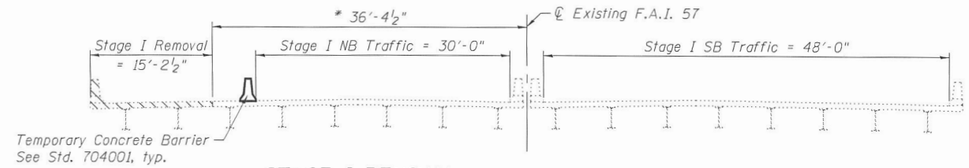

STAGE I REMOVAL

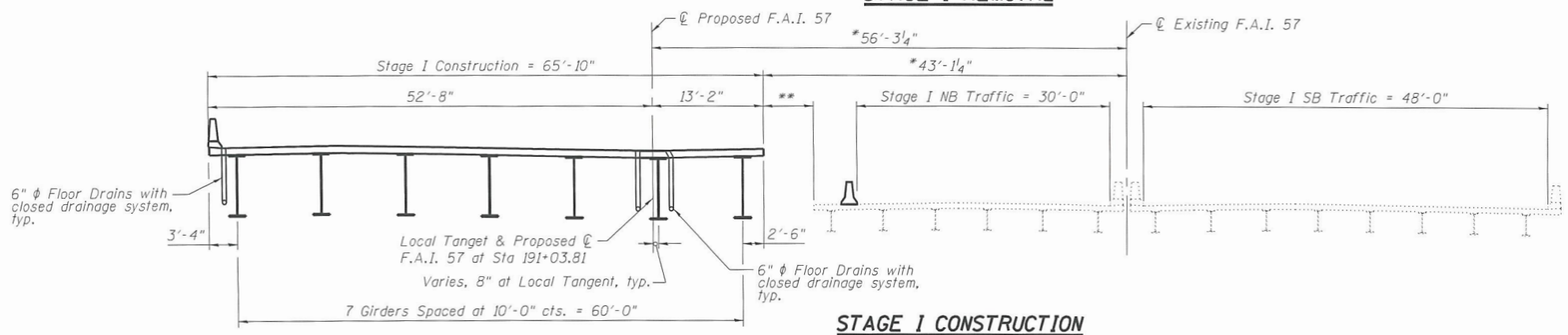

STAGE I CONSTRUCTION

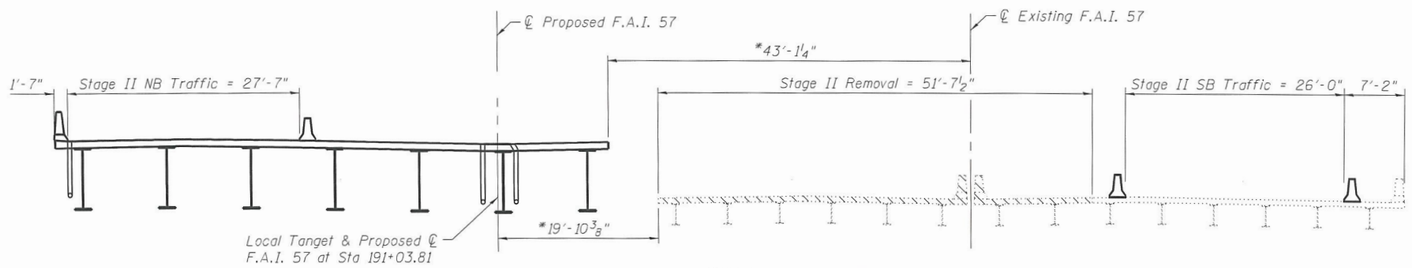

STAGE II REMOVAL

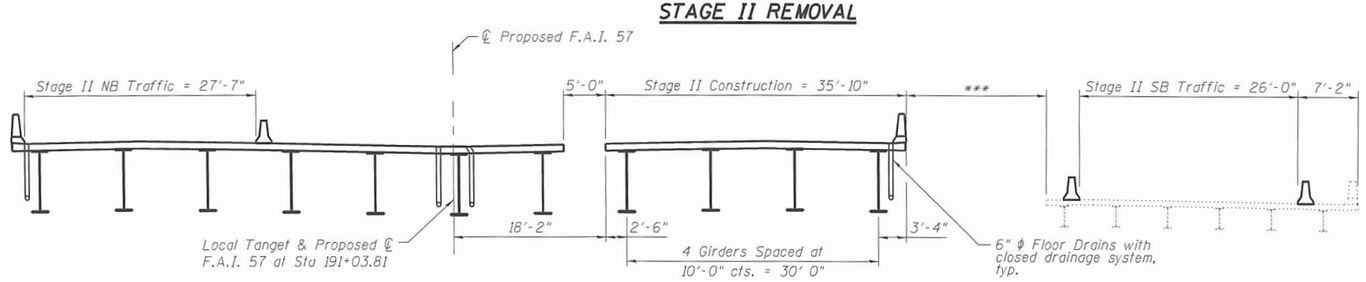

STAGE II CONSTRUCTION

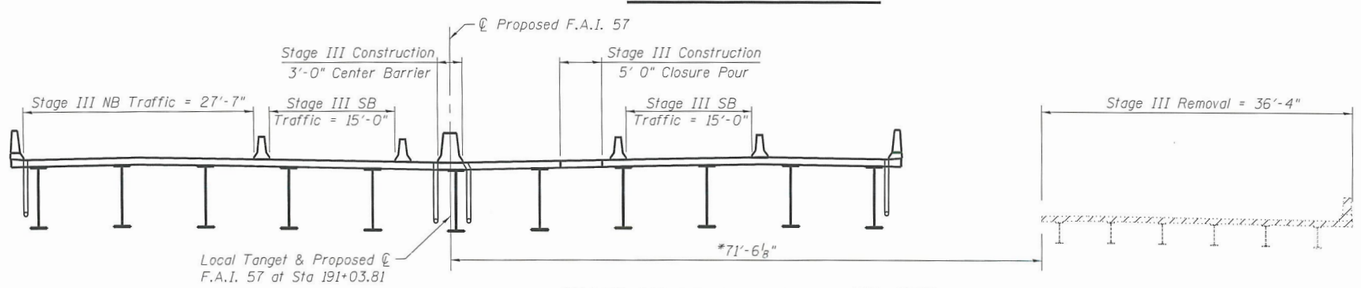

STAGE III REMOVAL & CONSTRUCTION

APPROVED

FEB 21 2019

AS A BASIS FOR PREPARATION OF DETAILED PLANS

Notes:
Lighting Bumpouts on parapets not shown.
* Indicates dimensions taken at Rt. L's to ℄ F.A.I. Rte. 57 at Station of Local Tangent.
** Dimension Varies ±6'-9" to ±6'-8⅜" from Back to Back of Existing Abutments.
*** Dimension Varies ±17'-5⅞" to ±17'-4⅞" from Back to Back of Existing Abutments.

STAGE CONSTRUCTION
I-57 OVER ILLINOIS ROUTE 17
(EAST COURT STREET)
F.A.I. RTE. 57 - SEC. (46-3)HBK
KANKAKEE COUNTY
STATION 190+94.06
STRUCTURE NO. 046-0154 (NB) & (SB)

LOCHMUELLER GROUP
1928 Stk Bradley R. Smith Drive
Troy, IL 62294
PHONE: 618.667.1430

USER NAME = bseibel	DESIGNED - CJF	REVISED	
Illinois Design Firm Number 184.001670	CHECKED - ACS	REVISED	
PLOT SCALE =	DRAWN - WS	REVISED	
PLOT DATE = 2/12/2019 8:42:43 AM	CHECKED - ACS	REVISED	

STATE OF ILLINOIS
DEPARTMENT OF TRANSPORTATION

SHEET NO. 3 OF 5 SHEETS

F.A.I. RTE.	SECTION	COUNTY	TOTAL SHEETS	SHEET NO.
57	(46-3)HBK	KANKAKEE		
STRUCTURE NUMBER 046-0154		CONTRACT NO. 66863		
	ILLINOIS	FED. AID PROJECT		

FILE NAME = S:\Projects\411-0005 BHY I-57 SPU1\Bridge\DGN\TSL Bridge 157 over IL 17 SPU1\ve0460005-66863-003-TSL.dgn

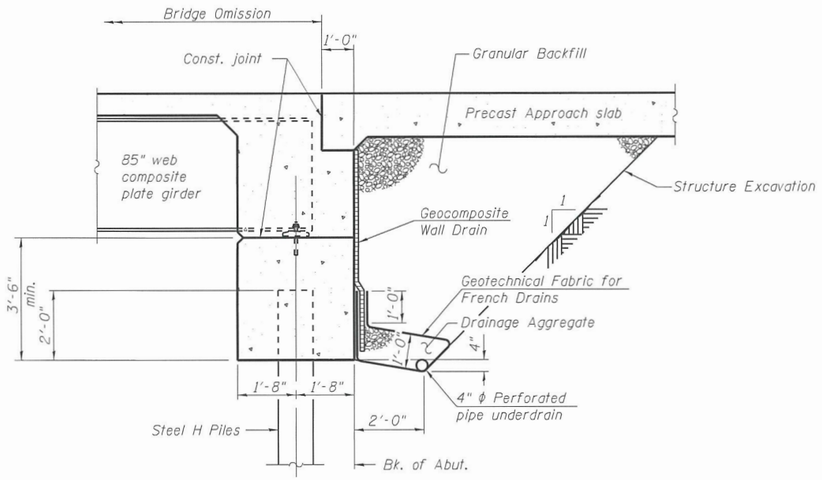

SECTION THRU INTEGRAL ABUTMENT

(Horiz. dim. @ Rt. L's)

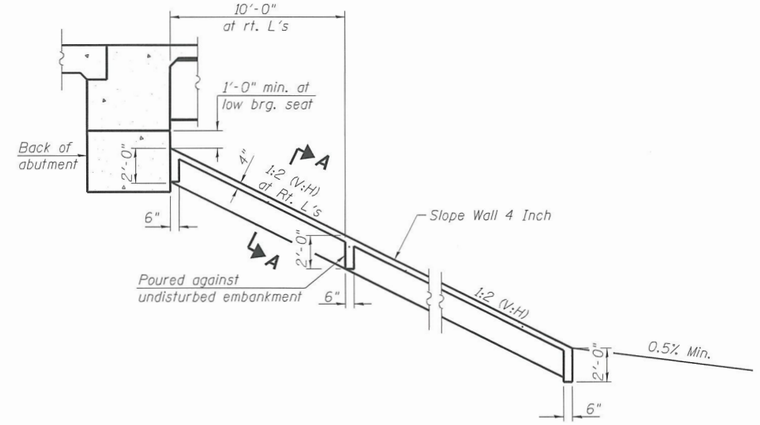

SECTION THRU CONCRETE SLOPEWALL

APPROVED

FEB 21 2019

AS A BASIS FOR PREPARATION OF DETAILED PLANS

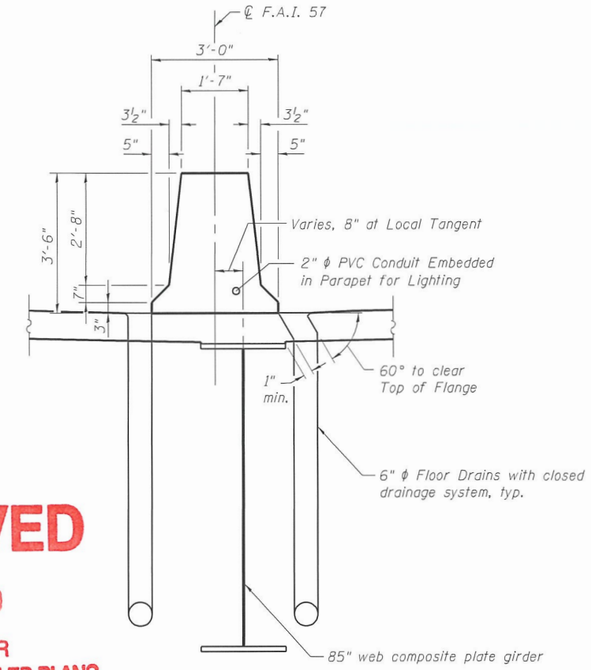

SECTION B-B

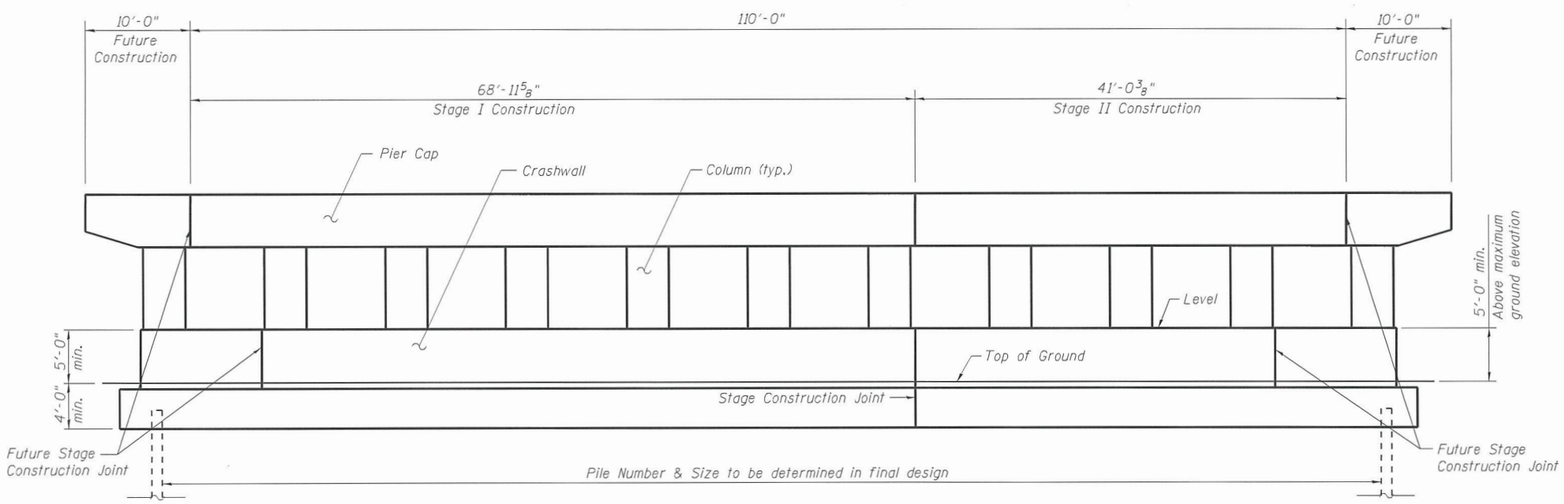

PIER SKETCH

All dimensions are shown along the skew

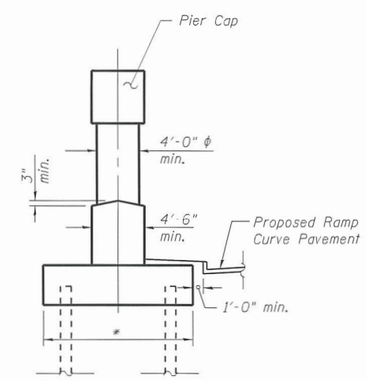

PIER END VIEW

* The final dimensions for the Future Condition shall not undercut the Proposed F.A.I. 57 & IL 17 Ramp Curbs.

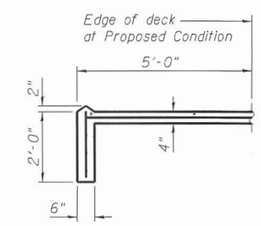

SECTION A-A

DETAILS
I-57 OVER ILLINOIS ROUTE 17
(EAST COURT STREET)
F.A.I. RTE. 57 - SEC. (46-3)HBK
KANKAKEE COUNTY
STATION 190+94.06
STRUCTURE NO. 046-0154 (NB) & (SB)

FILE NAME = S:\Projects\41-0005-RHY I-57 SPU\Bridge\DGN\TSL Bridge 157 over IL 17 SPU\ve=0460006-66863-004-TSBL.dgn

LOCHMUELLER GROUP
3928 SrA Bradley R. Smith Drive
Troy, IL 62294
PHONE: 618.667.1400

USER NAME = bseibel	DESIGNED - CJF	REVISED	
Illinois Design Firm Number 184.001670	CHECKED - ACS	REVISED	
PLOT SCALE =	DRAWN - WS	REVISED	
PLOT DATE = 2/12/2019 8:42:43 AM	CHECKED - ACS	REVISED	

STATE OF ILLINOIS
DEPARTMENT OF TRANSPORTATION

SHEET NO. 4 OF 5 SHEETS

F.A.I. RTE.	SECTION	COUNTY	TOTAL SHEETS	SHEET NO.
57	(46-3)HBK	KANKAKEE		
STRUCTURE NUMBER 046-0154		CONTRACT NO. 66863		
		ILLINOIS FED. AID PROJECT		

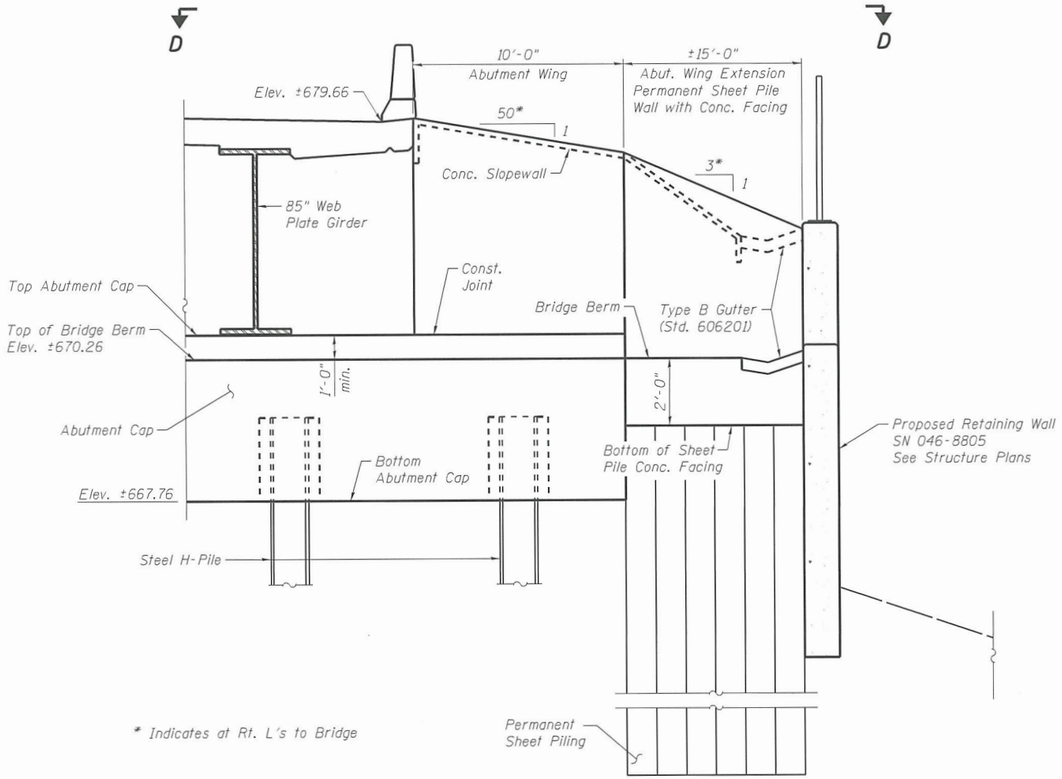

* Indicates at Rt. L's to Bridge

SECTION C-C
TAKEN ALONG BRIDGE SKEW

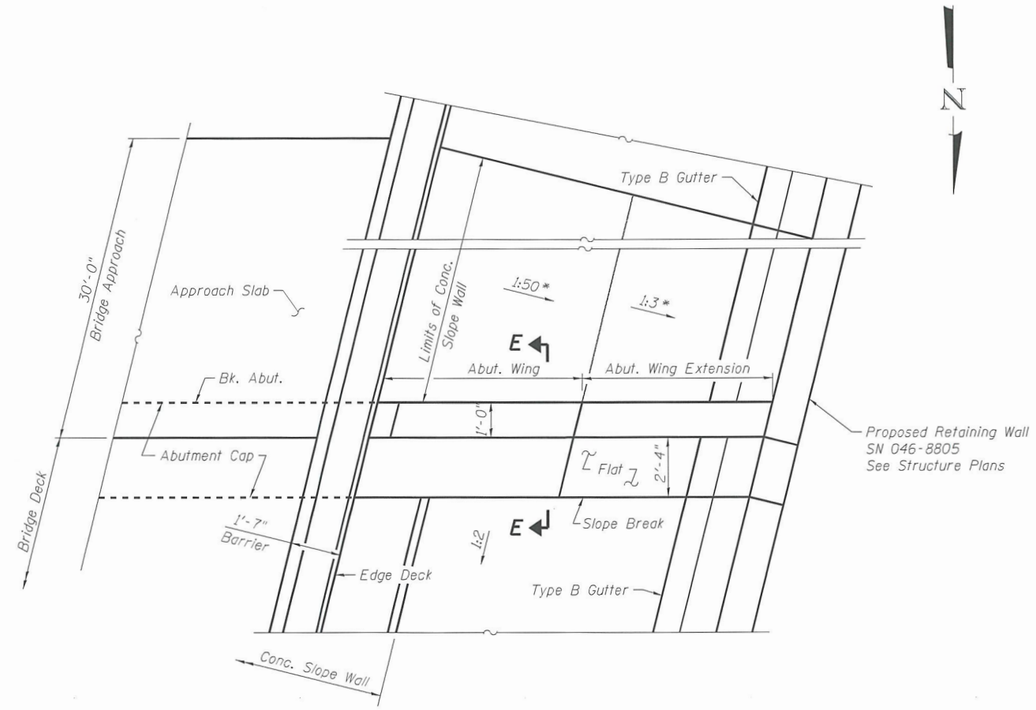

VIEW D-D

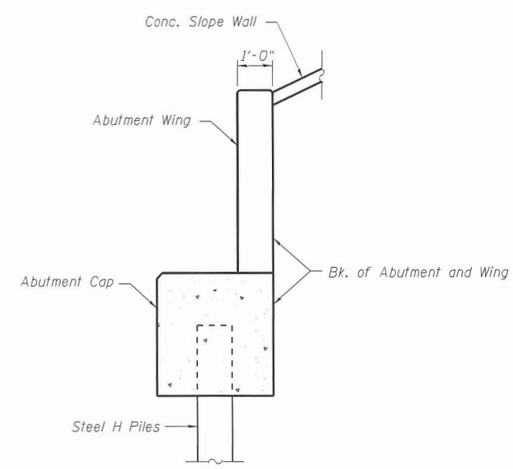

SECTION E-E

APPROVED

FEB 21 2019

AS A BASIS FOR
PREPARATION OF DETAILED PLANS

DETAILS
I-57 OVER ILLINOIS ROUTE 17
(EAST COURT STREET)
F.A.I. RTE. 57 - SEC. (46-3)HBK
KANKAKEE COUNTY
STATION 190+94.06
STRUCTURE NO. 046-0154 (NB) & (SB)

FILE NAME = S:\Projects\411-0085-0KY I-57 SPU1\Bridge\DGN\TSL Bridge I57 over IL 17 SPU1\ex0450085-66863-8805-TS01.dgn

LOCHMUELLER GROUP
1928 Srk Bradley S. Smith Drive
Troy, IL 62294
PHONE: 618.667.1450

USER NAME = bseibel	DESIGNED - CJF	REVISED	
Illinois Design Firm Number 184.001670	CHECKED - ACS	REVISED	
PLOT SCALE =	DRAWN - WS	REVISED	
PLOT DATE = 2/12/2019 8:42:44 AM	CHECKED - ACS	REVISED	

STATE OF ILLINOIS
DEPARTMENT OF TRANSPORTATION

SHEET NO. 5 OF 5 SHEETS

F.A.I. RTE.	SECTION	COUNTY	TOTAL SHEETS	SHEET NO.
57	(46-3)HBK	KANKAKEE		
STRUCTURE NUMBER 046-0154		CONTRACT NO. 66863		
	ILLINOIS FED. AID PROJECT			