Bench Mark (BM 145): Chiseled "□" top of curb at southeast end of east parapet wall SN 046-0008, Sta. 145+03, 54' Left, Elev. 665.96.
Existing Structures: S.N. 046-0008 (N.B.) and S.N. 046-0009 (S.B.), built in 1954 as F.A. Rte 26, Section 139-VB-VF, at station 143+72. The bridge decks were replaced and structures widened in 1990 under F.A.I. Rte 57, Section 139VBR. The existing dual structures are 5-span bridges with rolled steel beams supported on spill-thru counterfort abutments and multi-column concrete piers on spread footings. 259'-8" back to back abutments, 43'-2" out to out deck with a 10°-54'-30" right ahead skew. Structures to be removed and replaced. Traffic shall be maintained utilizing crossovers during construction.
No Salvage.

Notes: No freefall deck drains will be permitted in the span over tracks or within 10' of crossarms of a railroad pole line.
Up to ¼" may be ground off the bridge deck, the approach slabs, and the pavement connectors.

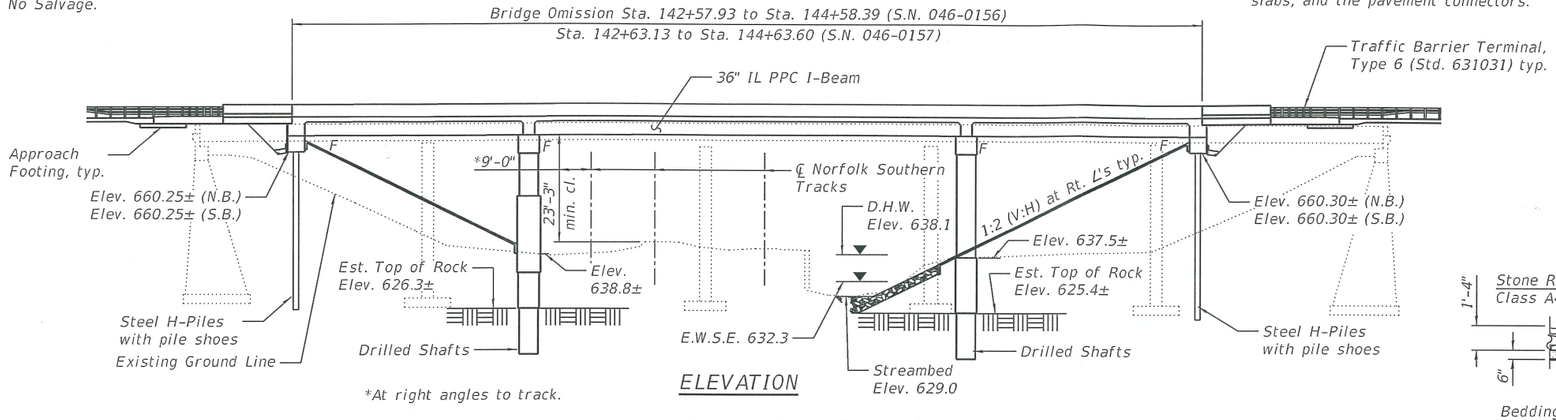

*At right angles to track.

ELEVATION

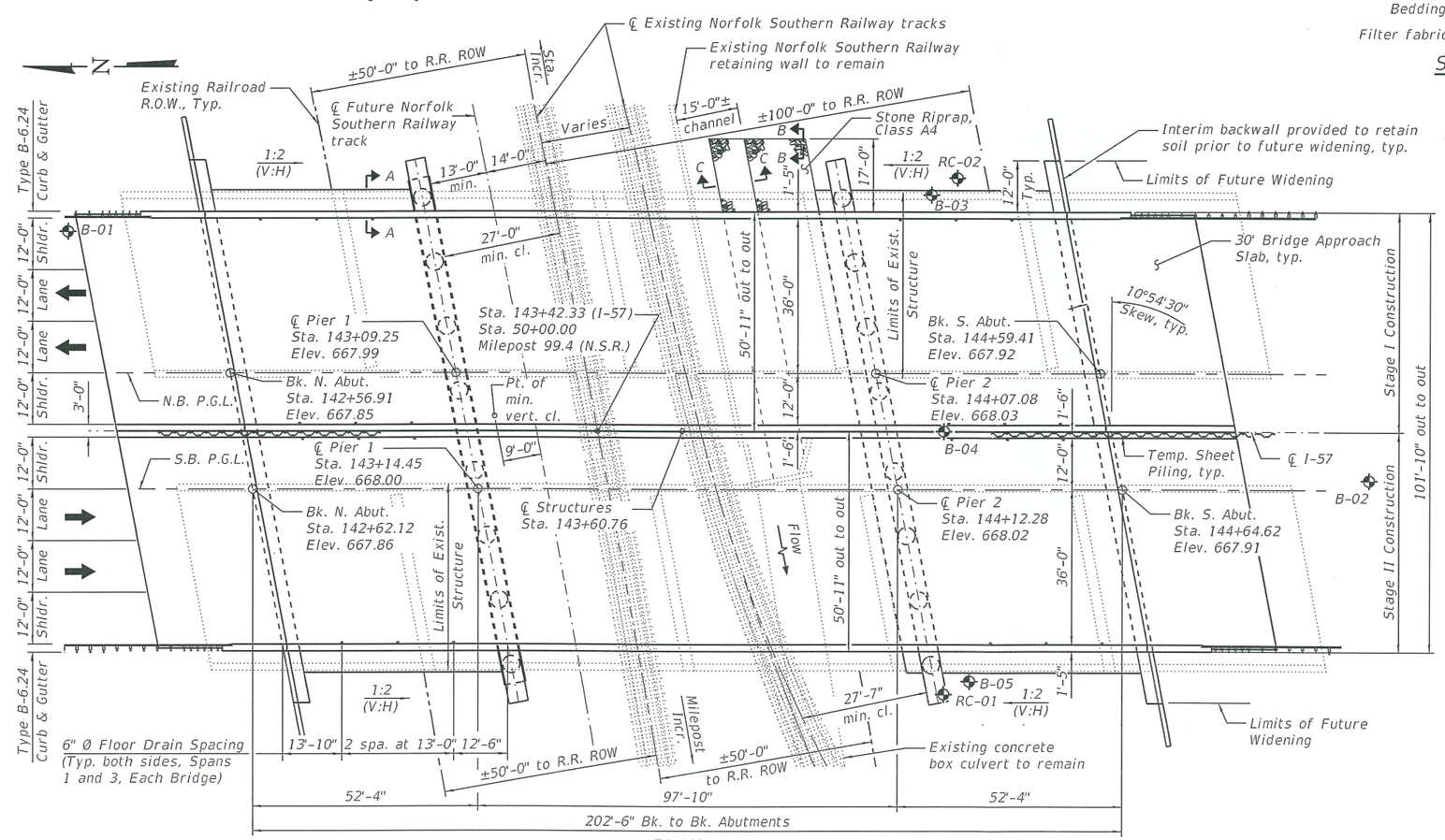

PLAN

WATERWAY INFORMATION

Drainage Area = 2.51 sq. mi. Exist. Low Grade Elev. 641.07 @ Sta. 158+00
Prop. Low Grade Elev. 641.07 @ Sta. 158+00

Flood	Freq. Yr.	Q C.F.S.	Opening Ft² Exist.	Opening Ft² Prop.	Nat. H.W.E.	Head - Ft. Exist.	Head - Ft. Prop.	Headwater El. Exist.	Headwater El. Prop.
	10	229	0	0	635.6	0.0	0.0	635.6	635.6
Design	50	355	0	0	638.1	0.0	0.0	638.1	638.1
Base	100	418	0	0	638.9	0.0	0.0	638.9	638.9
Scour Check	200	485	1	2	639.4	0.1	0.1	639.4	639.5
Max. Calc.	500	582	12	12	639.8	0.1	0.1	639.8	639.9

Exist. 10-year velocity = 5.0 fps Prop. 10-year velocity = 5.0 fps

DESIGN SCOUR ELEVATION TABLE

Event / Limit State	Design Scour Elevations (ft.) N. Abut.	Pier 1	Pier 2	S. Abut.	Item 113
Q100	660.2	638.8	637.5	660.3	8
Q200	660.2	638.8	637.5	660.3	
Design	660.2	638.8	637.5	660.3	
Check	660.2	638.8	637.5	660.3	

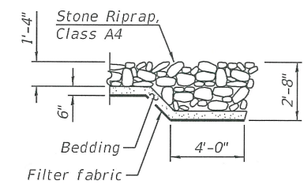

SECTION B-B

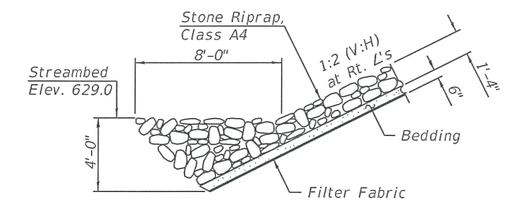

SECTION C-C
(within open channel only)

APPROVED
JUN 06 2019
AS A BASIS FOR PREPARATION OF DETAILED PLANS

LOADING HL-93

Allow 50#/sq. ft. for future wearing surface.

DESIGN SPECIFICATIONS

2017 AASHTO LRFD Bridge Design Specifications, 8th Edition

HIGHWAY CLASSIFICATION

F.A.I. Rte. 57
Functional Class: Interstate
ADT: 31,392 (2021); 37,152 (2041)
ADTT: 7,409 (2021); 8,768 (2041)
DHV: 3,139 (2021); 3,715 (2041)
Design Speed: 75 m.p.h.
Posted Speed: 70 m.p.h.
Two-Way Traffic
Directional Distribution: 50:50

DESIGN STRESSES

FIELD UNITS
f'c = 3,500 psi
f'c = 4,000 psi (Superstructure Concrete)
fy = 60,000 psi (Reinforcement)
PRECAST PRESTRESSED UNITS
f'c = 8,500 psi
f'ci = 7,000 psi
fpu = 270,000 psi (0.6" ○ low lax. strands)
fpbt = 202,300 psi (0.6" ○ low lax. strands)

SEISMIC DATA

Seismic Performance Zone (SPZ) = 1
Design Spectral Acceleration at 1.0 sec. (SD1) = 0.072 g
Design Spectral Acceleration at 0.2 sec. (SDS) = .0.125 g
Soil Site Class = C

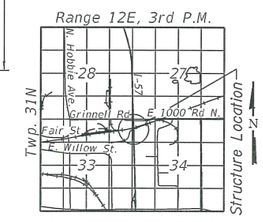

LOCATION SKETCH

GENERAL PLAN & ELEVATION
I-57 OVER NORFOLK SOUTHERN RAILWAY (M.P. 99.4) & DRAINAGE DITCH
F.A.I. RTE 57 - SEC. [(139)VB]ES
KANKAKEE COUNTY
STATION 143+60.76
STRUCTURE NO. 046-0156 (N.B.)
STRUCTURE NO. 046-0157 (S.B.)

LIN ENGINEERING, LTD.
Consulting Engineers
Springfield, Illinois

USER NAME =	DESIGNED - MTH	REVISED -	
	CHECKED - VPT	REVISED -	
PLOT SCALE =	DRAWN - CGY	REVISED -	
PLOT DATE = 4/23/2019	CHECKED - MTH	REVISED -	

STATE OF ILLINOIS
DEPARTMENT OF TRANSPORTATION

SHEET 1 OF 2 SHEETS

F.A.I. RTE.	SECTION	COUNTY	TOTAL SHEETS	SHEET NO.
57	[(139)VB]ES	KANKAKEE		

CONTRACT NO. 66F74
ILLINOIS FED. AID PROJECT

MODEL: Default
FILE NAME: E:\1609-9\Struct\TSL\CADD\CADD_Sheets\D366F74-046-0156&0157-001-GPE.dgn
4/23/2019 5:00:30 PM

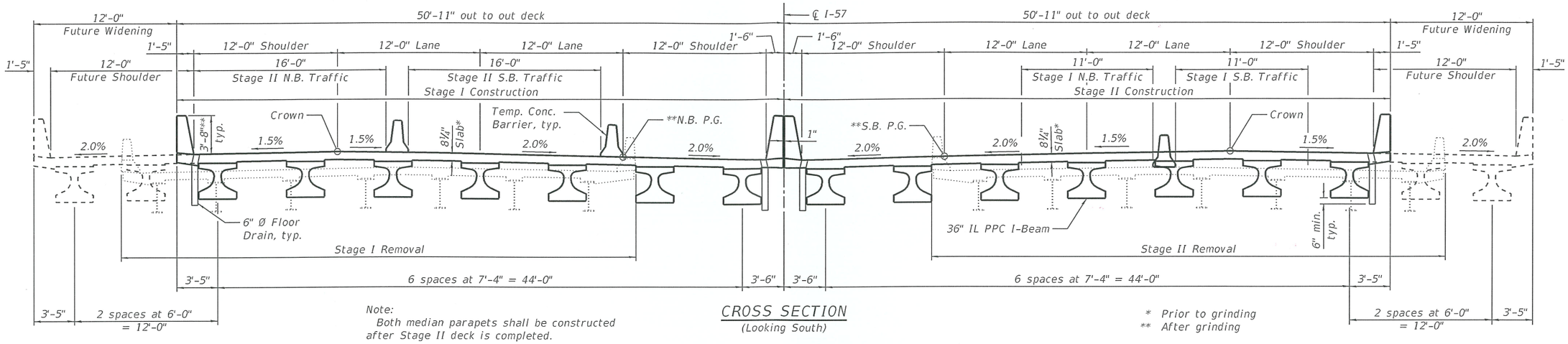

Note:
Both median parapets shall be constructed after Stage II deck is completed.

CROSS SECTION
(Looking South)

* Prior to grinding
** After grinding

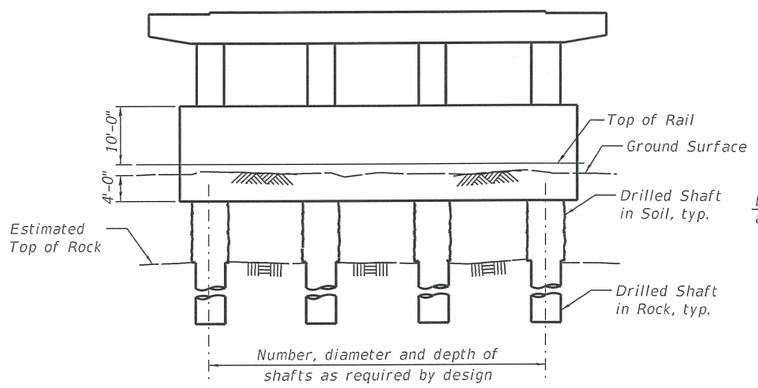

PIER 1 SKETCH

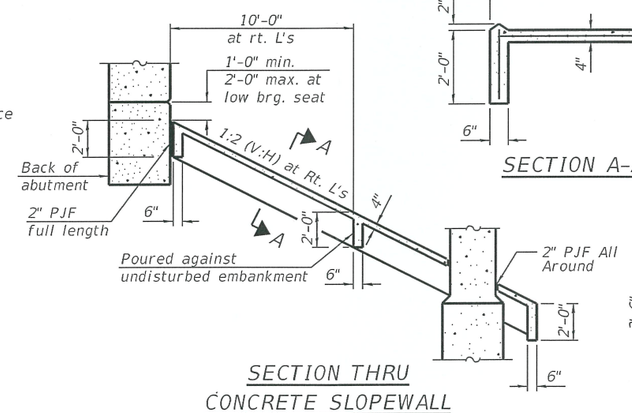

SECTION THRU
CONCRETE SLOPEWALL
(Pier 2 shown; Pier 1 similar)

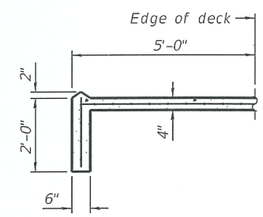

SECTION A-A

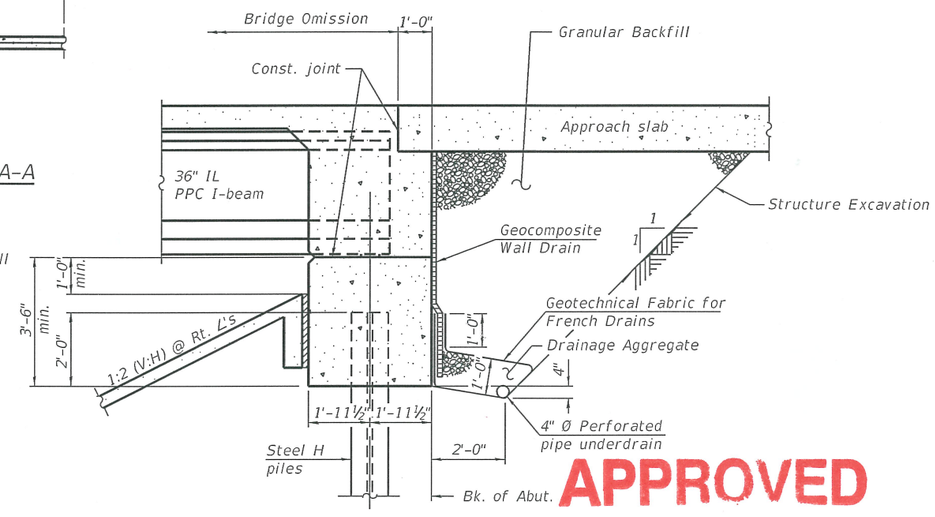

SECTION THRU INTEGRAL ABUTMENT
(Horiz. dim. @ Rt. L's)

APPROVED
JUN 06 2019
AS A BASIS FOR
PREPARATION OF DETAILED PLANS

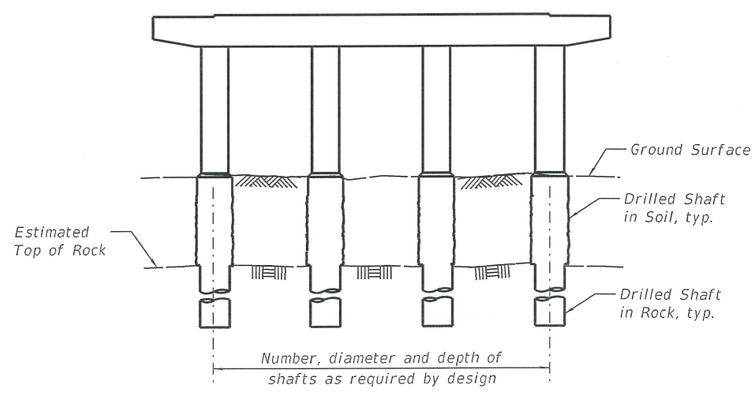

PIER 2 SKETCH

Sta.	Elev.
44+55	639.93
45+97	639.97
47+03	640.08
47+99	640.31
48+95	640.61
50+17	640.66
51+07	640.49
52+09	640.34
52+97	640.15
54+13	639.80
55+17	639.72

NORTH TRACK (MAIN)

Sta.	Elev.
42+91	637.13
47+24	638.10
47+87	638.37
48+97	638.87
50+05	639.35
51+05	639.50
52+09	640.49
52+97	640.15

SOUTH TRACK (SIDING)

TOP OF RAIL ELEVATIONS
NORFOLK SOUTHERN RAILWAY

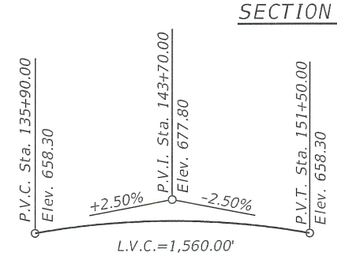

I- 57 PROFILE GRADE
(Along inside edge of pavement)
(PG shows final elevations after grinding)

GENERAL DATA
I-57 OVER NORFOLK SOUTHERN
RAILWAY (M.P. 99.4) & DRAINAGE DITCH
F.A.I. RTE 57 - SEC. [(139)VB]ES
KANKAKEE COUNTY
STATION 143+60.76
STRUCTURE NO. 046-0156 (N.B.)
STRUCTURE NO. 046-0157 (S.B.)

MODEL: Default
FILE NAME: E:\1609-9\Struct\TSL\CADD\CADD_Sheets\D366F74-046-0156&0157-002-GeneralData.dgn

LIN ENGINEERING, LTD. Consulting Engineers Springfield, Illinois	USER NAME =	DESIGNED - MTH	REVISED -
		CHECKED - VPT	REVISED -
	PLOT SCALE =	DRAWN - CGY	REVISED -
	PLOT DATE = 4/23/2019	CHECKED - MTH	REVISED -

STATE OF ILLINOIS
DEPARTMENT OF TRANSPORTATION

SHEET 2 OF 2 SHEETS

F.A.I. RTE.	SECTION	COUNTY	TOTAL SHEETS	SHEET NO.
57	[(139)VB]ES	KANKAKEE		

CONTRACT NO. 66F74
ILLINOIS FED. AID PROJECT

4/23/2019 5:00:34 PM