Bench Mark (BM 140): Chiseled "□" top of curb at southeast end of east parapet wall SN 046-0010, Sta. 139+61, 54' Left, Elev. 663.37.
Existing Structures: S.N. 046-0010 (N.B.) and S.N. 046-0011 (S.B.), built in 1954 as F.A. Rte 26, Section 139-HB3-HF3, at station 138+90.96. The bridge decks were replaced and structures widened in 1990 under F.A.I. Rte 57, Section 139HBR-3. The existing dual structures are 3-span bridges with rolled steel beams supported on spill-thru counterfort abutments and multi-column concrete piers on spread footings. 120'-2" back to back abutments, 43'-2" out to out deck with a 2°-21'-00" left ahead skew. Structures to be removed and replaced. Traffic shall be maintained utilizing crossovers during construction. No Salvage.

Note: Up to ¼" may be ground off the bridge deck, the approach slabs, and the pavement connectors.

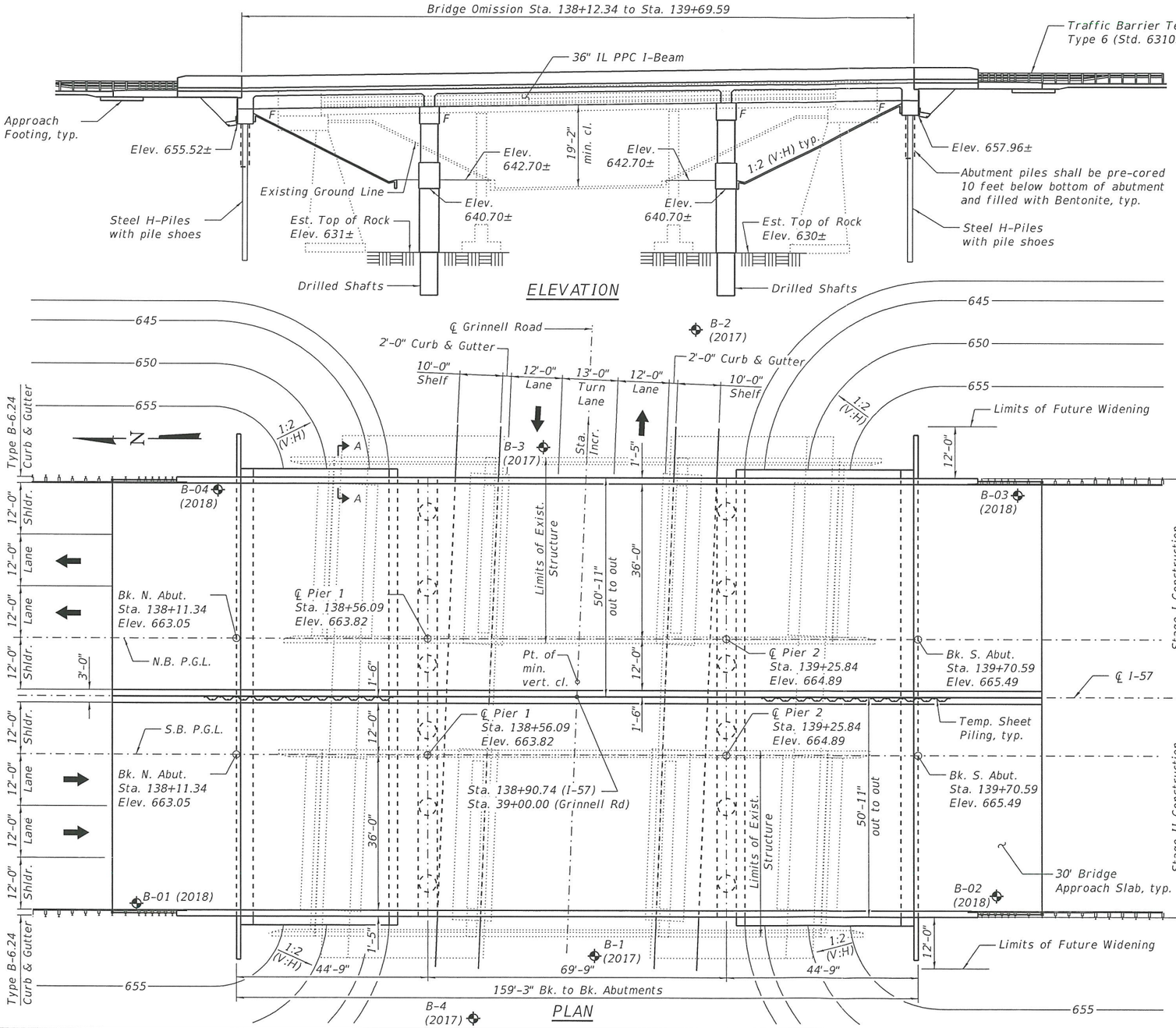

LOADING HL-93

Allow 50#/sq. ft. for future wearing surface.

DESIGN SPECIFICATIONS

2017 AASHTO LRFD Bridge Design Specifications, 8th Edition

APPROVED
APR 19 2019
AS A BASIS FOR PREPARATION OF DETAILED PLANS

DESIGN STRESSES

FIELD UNITS
f'c = 3,500 psi
f'c = 4,000 psi (Superstructure Concrete)
fy = 60,000 psi (Reinforcement)

PRECAST PRESTRESSED UNITS
f'c = 8,500 psi
f'ci = 7,000 psi
fpu = 270,000 psi (0.6" ∅ low lax. strands)
fpbt = 202,300 psi (0.6" ○ low lax. strands)

SEISMIC DATA

Seismic Performance Zone (SPZ) = 1
Design Spectral Acceleration at 1.0 sec. (SD1) = 0.072 g
Design Spectral Acceleration at 0.2 sec. (SDS) = 0.125 g
Soil Site Class = C

HIGHWAY CLASSIFICATION

F.A.U. Rte. 6221 (Grinnell Rd.)	F.A.I. Rte. 57
Functional Class: Minor Arterial	Functional Class: Interstate
ADT: 3,120 (2021); 3,720 (2041)	ADT: 31,392 (2021); 37,152 (2041)
ADTT: 250 (2021); 298 (2041)	ADTT: 7,409 (2021); 8,768 (2041)
DHV: 312 (2021); 372 (2041)	DHV: 3,139 (2021); 3,715 (2041)
Design Speed: 30 m.p.h.	Design Speed: 75 m.p.h.
Posted Speed: 30 m.p.h.	Posted Speed: 70 m.p.h.
Two-Way Traffic	Two-Way Traffic
Directional Distribution: 50:50	Directional Distribution: 50:50

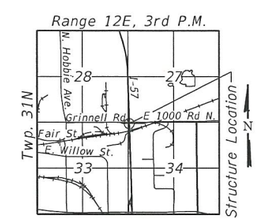

LOCATION SKETCH

GENERAL PLAN & ELEVATION
I-57 OVER GRINNELL ROAD
F.A.I. RTE 57 - SEC. [(139)HB-3]ES
KANKAKEE COUNTY
STATION 138+90.74
STRUCTURE NO. 046-0158 (N.B.)
STRUCTURE NO. 046-0159 (S.B.)

MODEL: Default
FILE NAME: E:\1609-14\Struct\TSL\CADD\CADD Sheets\D366F74-046-0010&0011-001-GPE.dgn
4/11/2019 9:57:54 AM

LIN ENGINEERING, LTD.
Consulting Engineers
Springfield, Illinois

USER NAME =	DESIGNED - MTH	REVISED -	
	CHECKED - VPT	REVISED -	
PLOT SCALE =	DRAWN - DAS	REVISED -	
PLOT DATE = 4/11/2019	CHECKED - MTH	REVISED -	

STATE OF ILLINOIS
DEPARTMENT OF TRANSPORTATION

SHEET 1 OF 2 SHEETS

F.A.I. RTE.	SECTION	COUNTY	TOTAL SHEETS	SHEET NO.
57	[(139)HB-3]ES	KANKAKEE		

CONTRACT NO. 66F74
ILLINOIS FED. AID PROJECT

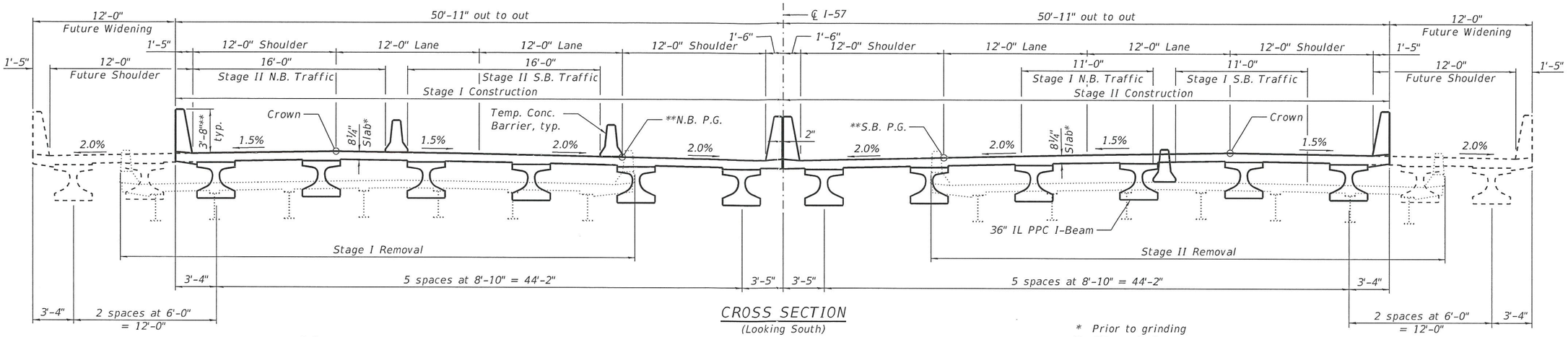

CROSS SECTION
(Looking South)

Note:
Both median parapets shall be constructed after Stage II deck is completed.

* Prior to grinding
** After grinding

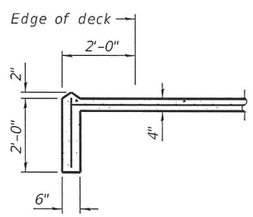

SECTION A-A

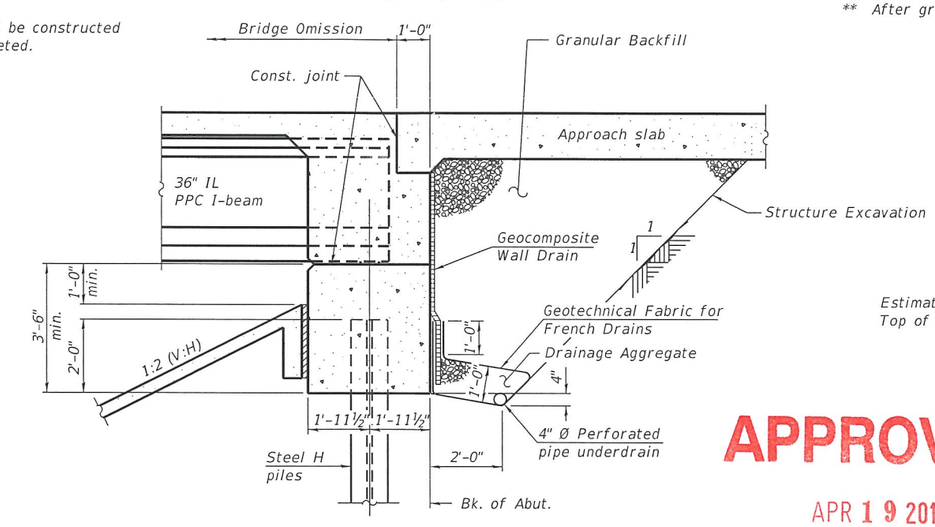

SECTION THRU INTEGRAL ABUTMENT

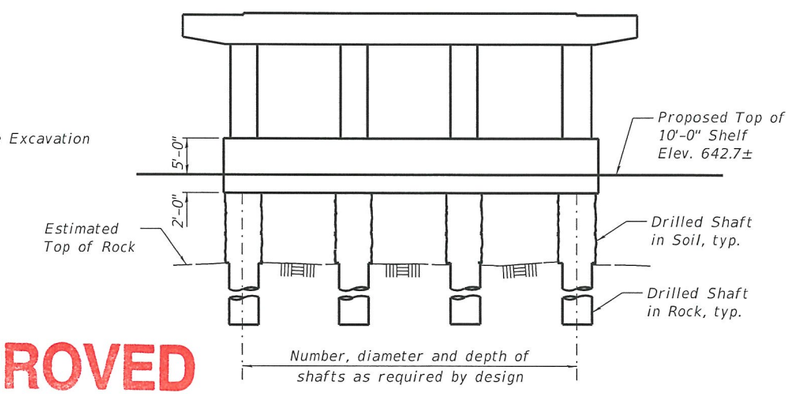

PIER SKETCH
(Separate piers for N.B. and S.B. bridges)

APPROVED
APR 19 2019
AS A BASIS FOR PREPARATION OF DETAILED PLANS

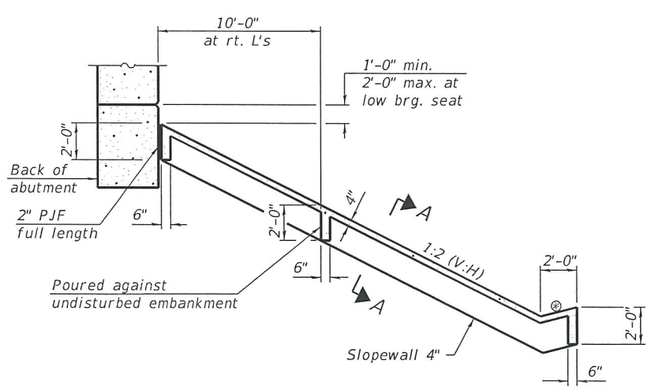

SECTION THRU CONCRETE SLOPEWALL

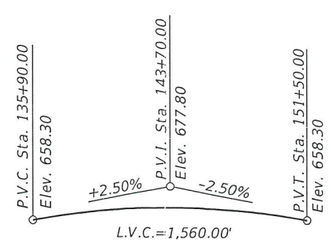

I-57 PROFILE GRADE
(Along inside edge of pavement)
(PG shows final elevations after grinding)

GRINNELL ROAD PROFILE GRADE
(Along ℄ roadway)

GENERAL DATA
I-57 OVER GRINNELL ROAD
F.A.I. RTE 57 - SEC. [(139)HB-3]ES
KANKAKEE COUNTY
STATION 138+90.74
STRUCTURE NO. 046-0158 (N.B.)
STRUCTURE NO. 046-0159 (S.B.)

MODEL: Default
FILE NAME: E:\1609-14\Struct\TSL\CADD\CADD Sheets\D366F74-046-0010&0011-002-GeneralData.dgn

LIN ENGINEERING, LTD. Consulting Engineers Springfield, Illinois	USER NAME =	DESIGNED - MTH	REVISED -	STATE OF ILLINOIS DEPARTMENT OF TRANSPORTATION	
		CHECKED - VPT	REVISED -		
	PLOT SCALE =	DRAWN - DAS	REVISED -		
	PLOT DATE = 4/11/2019	CHECKED - MTH	REVISED -		SHEET 2 OF 2 SHEETS

F.A.I. RTE.	SECTION	COUNTY	TOTAL SHEETS	SHEET NO.
57	[(139)HB-3]ES	KANKAKEE		
		CONTRACT NO. 66F74		
	ILLINOIS	FED. AID PROJECT		

4/11/2019 9:57:58 AM