Benchmarks: #2 Railroad Spike in light pole opposite Plumb Street, Elevation = 691.81, Sta. 709+64.58/37.92' LT.
#7, Railroad Spike in power pole, Elevation = 701.18, Sta. 693+58.78/38.49' RT.

Existing Structure: Structure No. 050-0073 was originally built in 1935 as SBI Route 70-A, Section 111 V-B-C. In 1973, the concrete deck was replaced and the existing steel beams were cleaned and painted under section 111-VBR. In 1990, the existing steel beams were cleaned and painted with an ALKYD system. In 2001, the haunch area on the north end of the bridge was repaired and the expansion joints were replaced. The superstructure consists of continuous three-span compisite (positive moment region) rolled steel beams (30 WF) supporting a 7" thick reinforced concrete deck. The substructure consists of triangular shaped reinforced concrete counterfort abutment supported on spread footings and multi-column piers with a crash wall supported on spread footings. The back-to-back of abutment dimension measures 180'-4 3/4" and the out-to-out dimension measures 35'-0". The span lengths are 58'-6 1/4", 63'-4 3/4" and 58'-5 3/4". The structure is skewed 11°54'20" right forward. Bridge to be closed and traffic detoured during construction.

No Salvage.

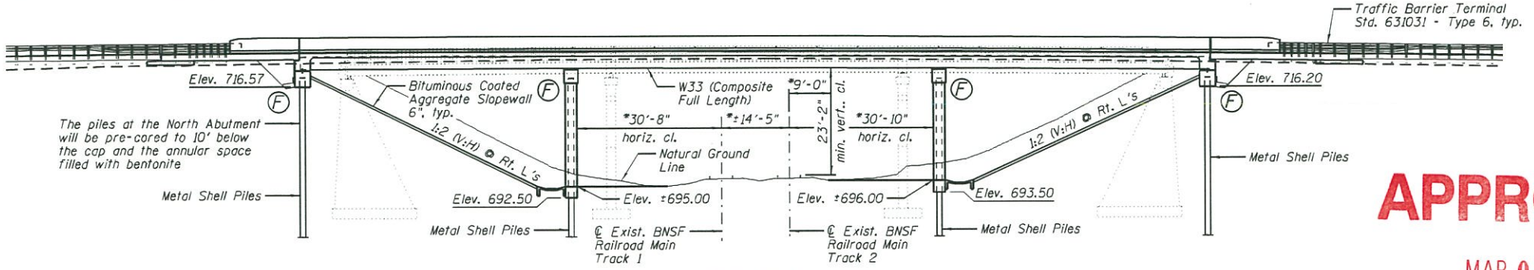

ELEVATION

*Dimensions @ Rt. L's to Track

APPROVED
MAR 08 2017
AS A BASIS FOR PREPARATION OF DETAILED PLANS

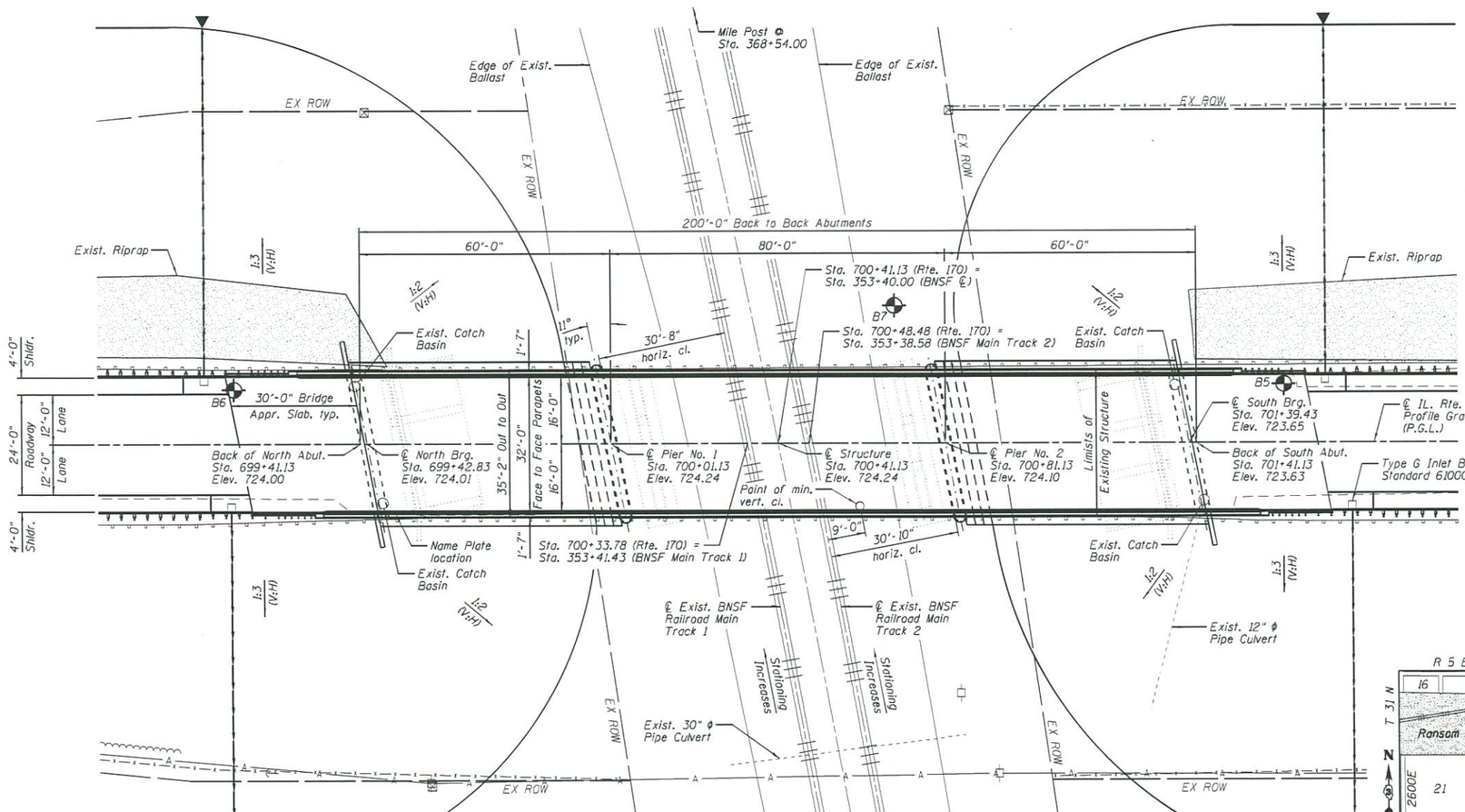

PLAN

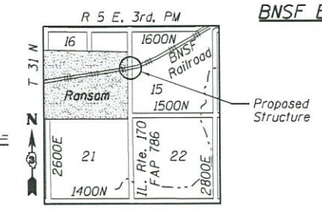

LOCATION SKETCH

HIGHWAY CLASSIFICATION

F.A.P. Route 786 (IL 170)
Functional Class: Minor Arterial (Rural)
A.D.T.: 1200 (2013), 1700 (2039)
D.H.V.: 162
A.D.T.T.: 120 (2013)
Design Speed: 55 M.P.H.
Posted Speed: 55 M.P.H.
Two Way Traffic
Directional Distribution: 50/50

LOADING HL-93

Allow 50#/sq. ft. for future wearing surface.

DESIGN SPECIFICATIONS

2015 Interim AASHTO LRFD Bridge Design Specifications, Customary U.S. Units, 7th Edition

DESIGN STRESSES

FIELD UNITS:

f'c = 3,500 psi
f'c = 4,000 psi (Superstructure Concrete)
fy = 60,000 psi (Reinforcement)
fy = 50,000 psi (AASHTO M270 Grade 50W)

SEISMIC DATA

Seismic Performance Zone (SPZ) = 1
Design Spectral Acceleration at 1.0 sec. (SD1) = 0.073
Design Spectral Acceleration at 0.2 sec. (SDs) = 0.129
Soil Site Class = C

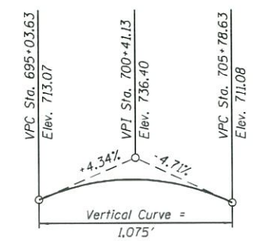

PROFILE GRADE

(Along ℄ Roadway)

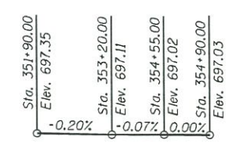

BNSF WEST BOUND TRACK PROFILE GRADE

(Top of rail along South rail)

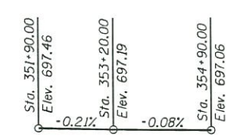

BNSF EAST BOUND TRACK PROFILE GRADE

(Top of rail along South rail)

IL. ROUTE 170 OVER BNSF RAILROAD
F.A.P. 786 - SECTION 111VBR
LASALLE COUNTY
STATION 700+41.13
STRUCTURE NO. 050-0258

NOTE:
Proposed Right-of-Way not shown for clarity.

Farnsworth GROUP
2709 McGRAW DRIVE
BLOOMINGTON, ILLINOIS 61704
(309) 663-8435 / info@fw.com

	DESIGNED - TCR	REVISED
	CHECKED - JML	REVISED
	DRAWN - DJM	REVISED
DATE - 08/15/16	CHECKED - JML	REVISED

STATE OF ILLINOIS
DEPARTMENT OF TRANSPORTATION

GENERAL PLAN
STRUCTURE NO. 050-0258
SHEET NO. 1 OF 2 SHEETS

F.A.P. RTE.	SECTION	COUNTY	TOTAL SHEETS	SHEET NO.
786	111VBR	LASALLE	2	1
		CONTRACT NO. 66C58		
		ILLINOIS FED. AID PROJECT		

24-9078

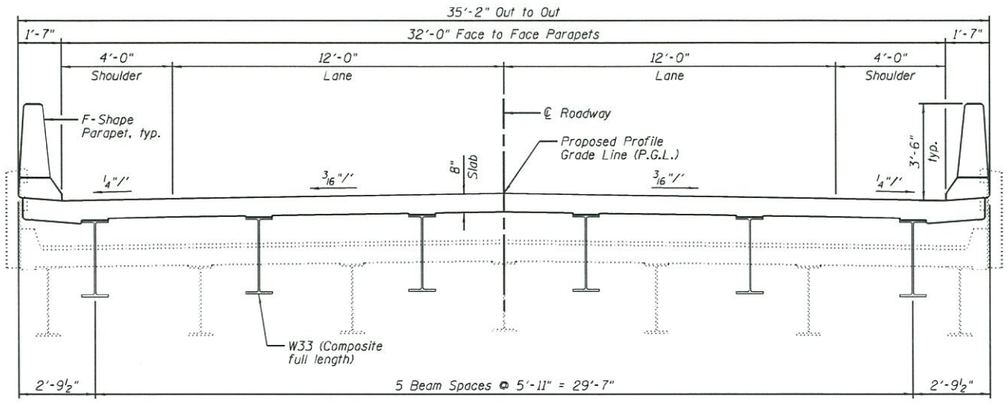

CROSS SECTION
(Looking South)

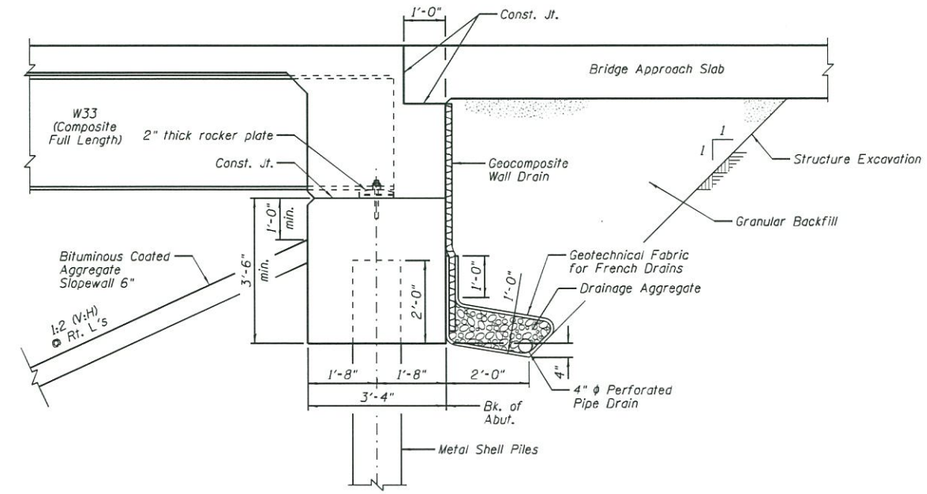

SECTION THRU ABUTMENT
(Horizontal dimensions @ Rt. L's)

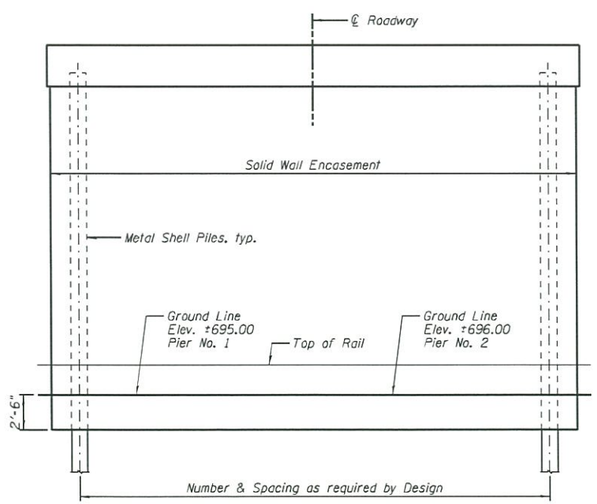

PIER SKETCH
(Looking South)

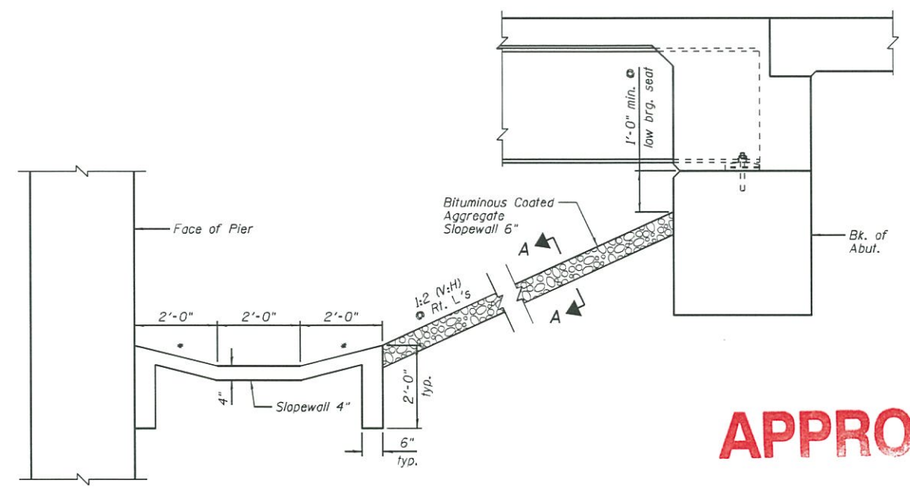

SECTION THRU SLOPEWALL
*1:4 (V:H)
(Horizontal dimensions @ Rt. L's)

APPROVED
MAR 08 2017
AS A BASIS FOR
PREPARATION OF DETAILED PLANS

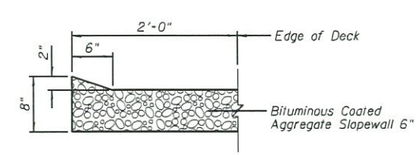

SECTION A-A

IL. ROUTE 170 OVER
BNSF RAILROAD
F.A.P. 786 - SECTION 111VBR
LASALLE COUNTY
STATION 700+41.13
STRUCTURE NO. 050-0258

Farnsworth GROUP
2709 McGRAW DRIVE
BLOOMINGTON, ILLINOIS 61704
(309) 663-8435 / info@fgw.com

	DESIGNED - TCR	REVISED
	CHECKED - JML	REVISED
	DRAWN - DJM	REVISED
DATE - 08/15/16	CHECKED - JML	REVISED

STATE OF ILLINOIS
DEPARTMENT OF TRANSPORTATION

DETAILS
STRUCTURE NO. 050-0258
SHEET NO. 2 OF 2 SHEETS

F.A.P. RTE.	SECTION	COUNTY	TOTAL SHEETS	SHEET NO.
786	111VBR	LASALLE	2	2
		CONTRACT NO. 66C58		
	ILLINOIS FED. AID PROJECT			

24-9078