BENCHMARK: BM1011 - Chiseled square in northeast parapet wall of SN 064-0028 Sta. 240+41, 25' LT, Elev. 429.30 (NAVD 88)

EXISTING STRUCTURES:
SN 064-0027 and SN 064-0028 were orginally built in 1970 as F.A.I. 24, Section 64-3HB. The three-span structures consist of concrete decks, each supported by 6 continuous steel beams. The spans are supported by concrete multi-column piers and open abutments. The piers and abutments are supported on pile foundations. Back to back abutments is 130'-6". The superstructure width is 44'-0" out to out. The skew is 26°-33'-26". Interstate traffic shall be maintained utilizing crossovers. Country Club Road will be closed intermittently as required.

No salvage.

Up to 1/4" may be ground off the bridge deck, the bridge approach slabs, and the pavement connectors.

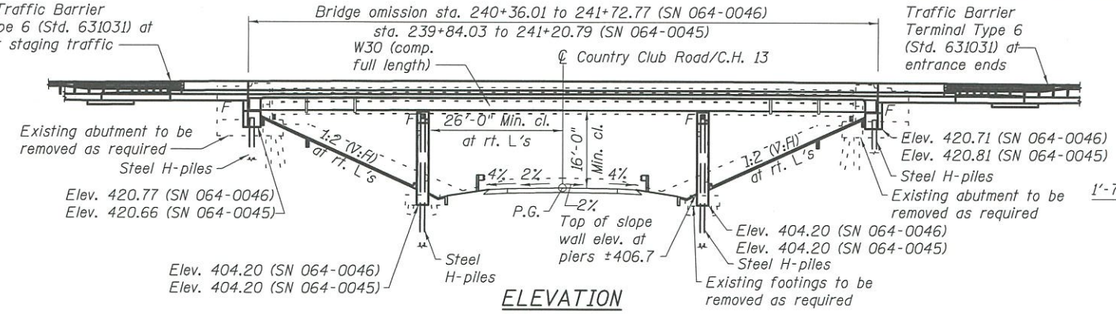

ELEVATION

(Showing SN 064-0046, SN 064-0045 similar)

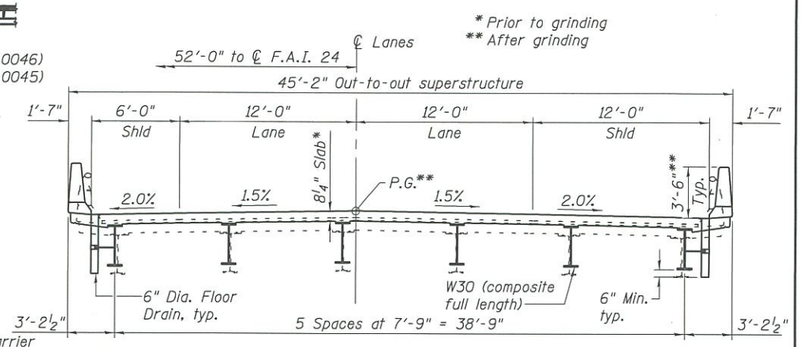

CROSS SECTION

(SN 064-0046 looking west shown, SN 064-0045 similar)

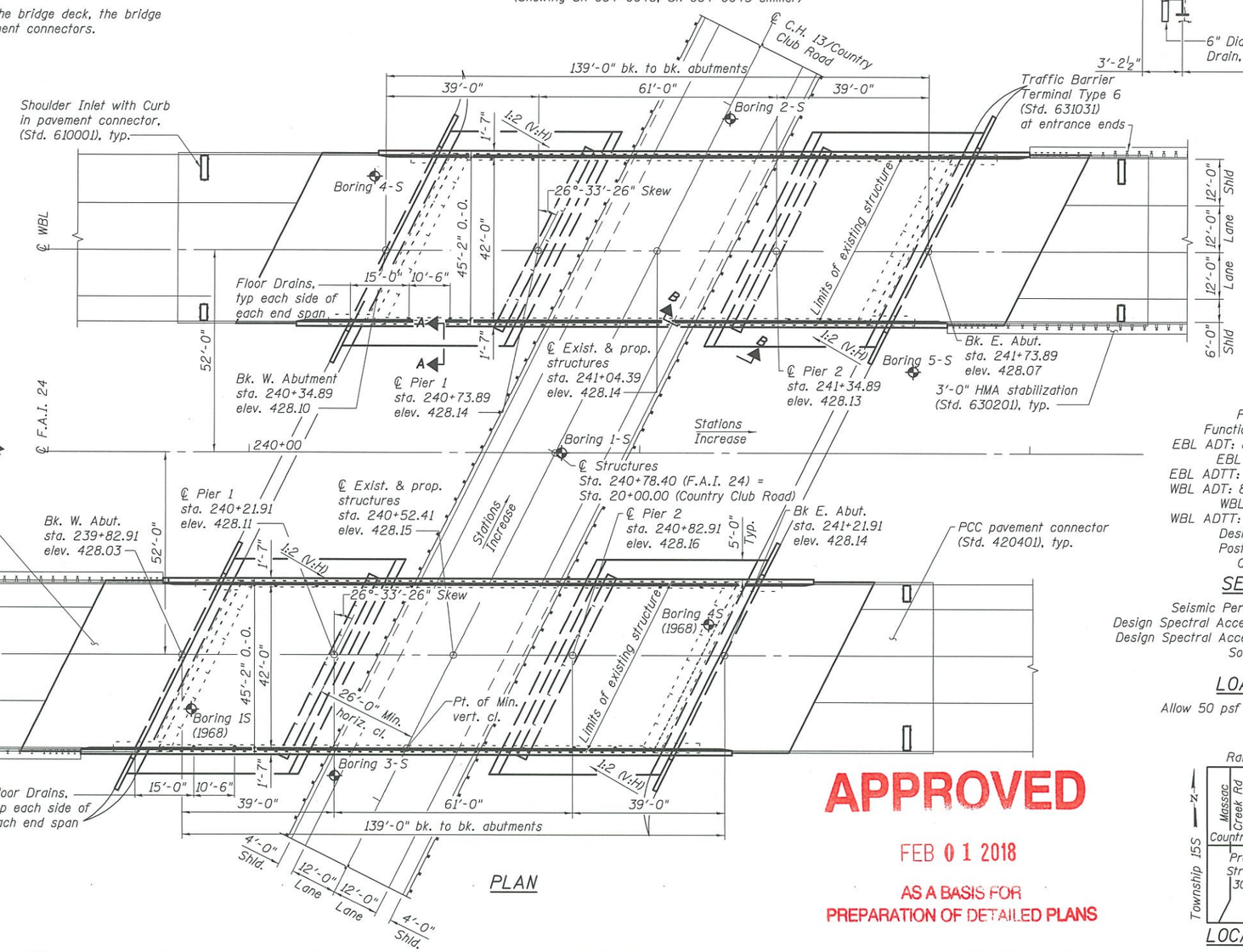

PLAN

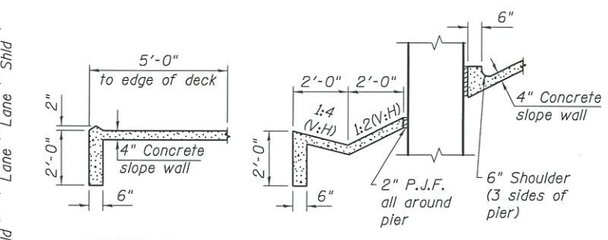

SECTION A-A

SECTION B-B

HIGHWAY CLASSIFICATION

F.A.I. 24 (I-24)
Functional Class: Interstate
EBL ADT: 8900 (2017)/13490 (2038)
EBL DHV: 945 (2038)
EBL ADTT: 3448 (2017)/5230 (2038)
WBL ADT: 8824 (2017)/13,370 (2038)
WBL DHV: 935 (2038)
WBL ADTT: 3750 (2017)/5685 (2038)
Design Speed: 70 mph
Posted Speed: 70 mph
One-Way Traffic

C.H. 13 (Country Club Road)
Functional Class: Minor Arterial (Non-Urban)
ADT: 2500 (2017)/3790 (2038)
DHV: 455 (2038)
ADTT: 275 (2038)
Design Speed: 55 mph
Posted Speed: 55 mph
Two-Way Traffic
Directional Distribution: 50:50

SEISMIC DATA

Seismic Performance Zone (SPZ) = 3
Design Spectral Acceleration at 1.0 sec. (S_{D1}) = 0.496g
Design Spectral Acceleration at 0.2 sec. (S_{DS}) = 1.141g
Soil Site Class = D

DESIGN SPECIFICATIONS

2017 AASHTO LRFD
Bridge Design Specifications
8th Edition

LOADING HL-93

Allow 50 psf for future wearing surface

DESIGN STRESSES FIELD UNITS

f'c = 3,500 psi (substructure)
f'c = 4,000 psi (superstructure)
fy = 50,000 psi (AASHTO M270 Grade 50)
fy = 60,000 psi (reinforcement)

APPROVED

FEB 01 2018

AS A BASIS FOR PREPARATION OF DETAILED PLANS

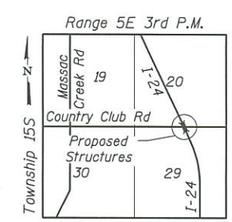

LOCATION SKETCH

GENERAL PLAN & ELEVATION
I-24 OVER COUNTRY CLUB ROAD
F.A.I. RTE. 24 - SECTION (64-3HB)BR-1
MASSAC COUNTY
STATION 240+78.40
STRUCTURE NO. 064-0045 (EB)
STRUCTURE NO. 064-0046 (WB)

ESCA CONSULTANTS, INC.

USER NAME = rtm	DESIGNED - RTM	09/17	REVISED -	STATE OF ILLINOIS DEPARTMENT OF TRANSPORTATION	
ESCA PROJECT NO. 1035.11	CHECKED - RDP	09/17	REVISED -		
PLOT SCALE = 0:2 ':' / in.	DRAWN - KAH	01/18	REVISED -		
PLOT DATE = 1/31/2018 3:39:22 PM	CHECKED - RDP/ELH	01/18	REVISED -		SHEET NO. 1 OF 2 SHEETS

F.A.I. RTE.	SECTION	COUNTY	TOTAL SHEETS	SHEET NO.
24	(64-3HB)BR-1	MASSAC	-	-
		CONTRACT NO. 78502		
		ILLINOIS FED. AID PROJECT		

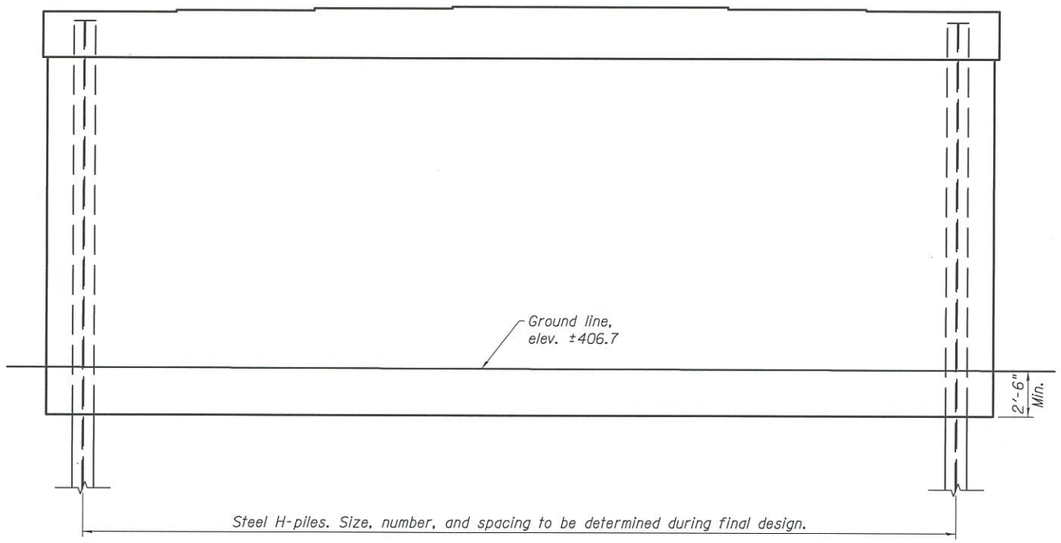

PIER SKETCH

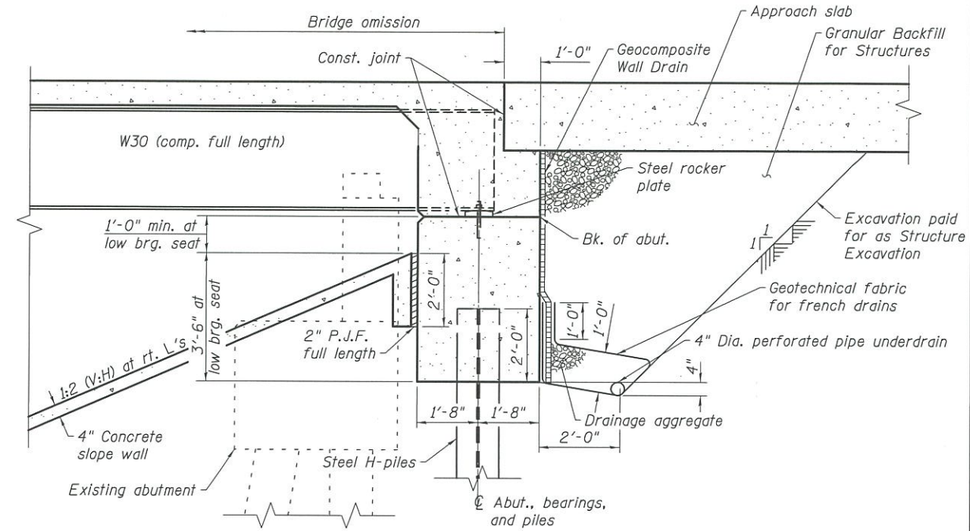

SECTION THROUGH ABUTMENT

(Horizontal dimensions at rt. L's)

APPROVED

FEB 01 2018

AS A BASIS FOR
PREPARATION OF DETAILED PLANS

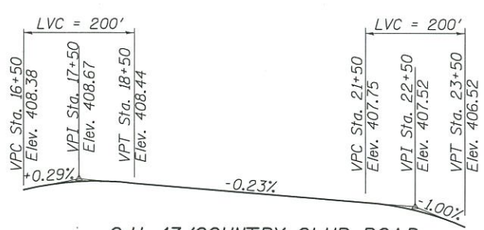

C.H. 13/COUNTRY CLUB ROAD
PROFILE GRADE

(Along ℄ roadway)

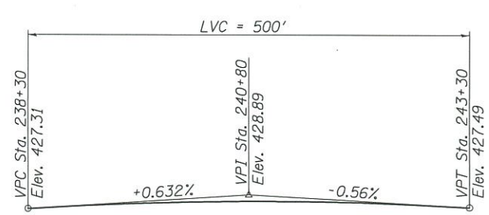

I-24 WBL PROFILE GRADE

(Along ℄ lanes)

(PG shows the final elevations after grinding)

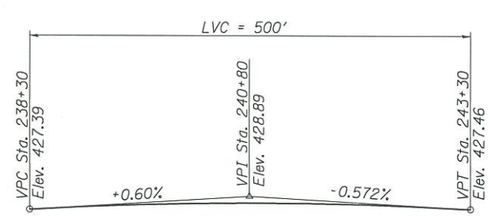

I-24 EBL PROFILE GRADE

(Along ℄ lanes)

(PG shows the final elevations after grinding)

DETAILS
I-24 OVER COUNTRY CLUB ROAD
F.A.I. RTE. 24 - SECTION (64-3HB)BR-1
MASSAC COUNTY
STATION 240+78.40
STRUCTURE NO. 064-0045 (EB)
STRUCTURE NO. 064-0046 (WB)

PRINT DRIVER = | PO: E.B.&Lat'g
PLOT SCALE = 1:20.000000
PLOT DATE = 01/31/2018
MODEL NAME = BRDETAIL-78502-B2-T3L.dgn

ESCA CONSULTANTS, INC.

USER NAME = rtm	DESIGNED - RTM 09/17	REVISED -	STATE OF ILLINOIS DEPARTMENT OF TRANSPORTATION	
ESCA PROJECT NO. 1035.11	CHECKED - RDP 09/17	REVISED -		
PLOT SCALE = 0:2 ':' / in.	DRAWN - KAH 11/17	REVISED -		
PLOT DATE = 1/31/2018 3:55:19 PM	CHECKED - RDP/ELH 01/18	REVISED -		SHEET NO. 2 OF 2 SHEETS

F.A.I. RTE.	SECTION	COUNTY	TOTAL SHEETS	SHEET NO.
24	(64-3HB)BR-1	MASSAC	-	-
		CONTRACT NO. 78502		
		ILLINOIS FED. AID PROJECT		