Bench Mark: Chiseled "□" in top of NE Wingwall, Station 26+11.8640/17.1214 Lt. Elevation = 764.64.

Existing Structure: Structure No. 071-0070 is a 3 span PPC deck beam bridge, originally built in 1983 as F.A.S. 2079 (US Route 52), Section 16-BR at Station 971+50.04. Both abutments are open stub abutments supported on concrete piles and the two bent type piers are supported on steel H-Piles. The back to back abutment length is 124'-4⅞". The out to out deck width is 31'-2" with a clear roadway width of 28'-0" and a 20° right-forward skew. Existing structure is to be removed and replaced. Traffic will be detoured.

Salvage: None

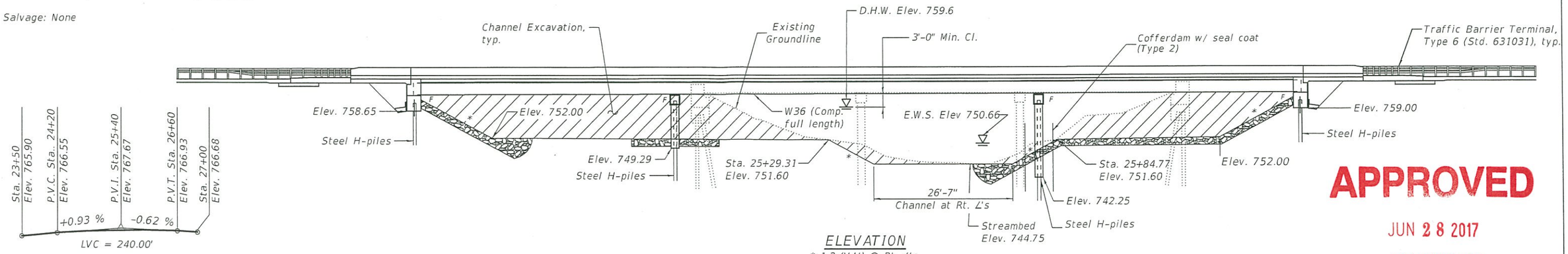

APPROVED

JUN 28 2017

AS A BASIS FOR PREPARATION OF DETAILED PLANS

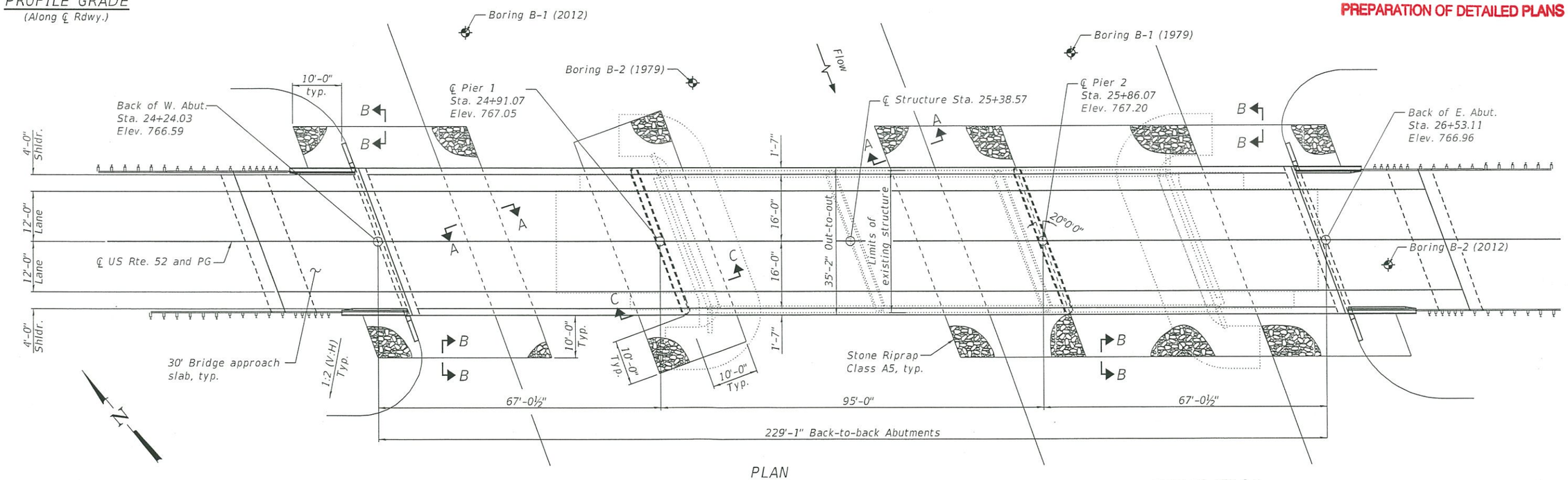

DESIGN SPECIFICATIONS

2014 AASHTO LRFD Bridge Design Specifications, 7th Edition with 2015 and 2016 Interims

DESIGN STRESSES

FIELD UNITS

f'c = 3,500 psi
f'c = 4,000 psi (Superstructure Concrete)
fy = 60,000 psi (Reinforcement)
fy = 50,000 psi (M270 Grade 50W)

HIGHWAY CLASSIFICATION

F.A.S. Rte. 2079 -U.S. Rte. 52
Functional Class: Major Collector
ADT: 750 (2022); 890 (2042)
ADTT: 196 (2022); 233 (2042)
DHV: 89
Design Speed: 60 m.p.h.
Posted Speed: 55 m.p.h.
Two-Way Traffic
Directional Distribution: 50:50

LOADING HL-93

Allow 50 lb/sq. ft. for future wearing surface.

SEISMIC DATA

Seismic Performance Zone (SPZ) = SPZ 1
Design Spectral Acceleration at 1.0 sec. (SD1) = 0.057g
Design Spectral Acceleration at 0.2 sec. (SDS) = 0.097g
Soil Site Class = C

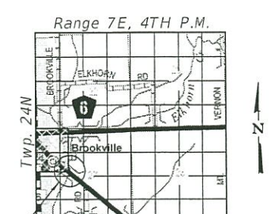

LOCATION SKETCH

GENERAL PLAN AND ELEVATION
U.S. ROUTE 52 OVER ELKHORN CREEK
F.A.S. RTE. 2079 - SEC. 16BR-1
OGLE COUNTY
STATION 25+38.57
STRUCTURE NO. 071-0098

DESIGNED	-	NEPHTALI RIVERA-MARTINEZ
CHECKED	-	AL-BARRAE SHEBIB
DRAWN	-	IAN ANDREWS
CHECKED	-	N.R.M., A.R.S.

JUNE 28, 2017

STATE OF ILLINOIS
DEPARTMENT OF TRANSPORTATION

SHEET NO. 1 OF 2 SHEETS

F.A.S. RTE.	SECTION	COUNTY	TOTAL SHEETS	SHEET NO.
2079	16BR-1	OGLE	2	1
		CONTRACT NO. 64H57		
		ILLINOIS FED. AID PROJECT		

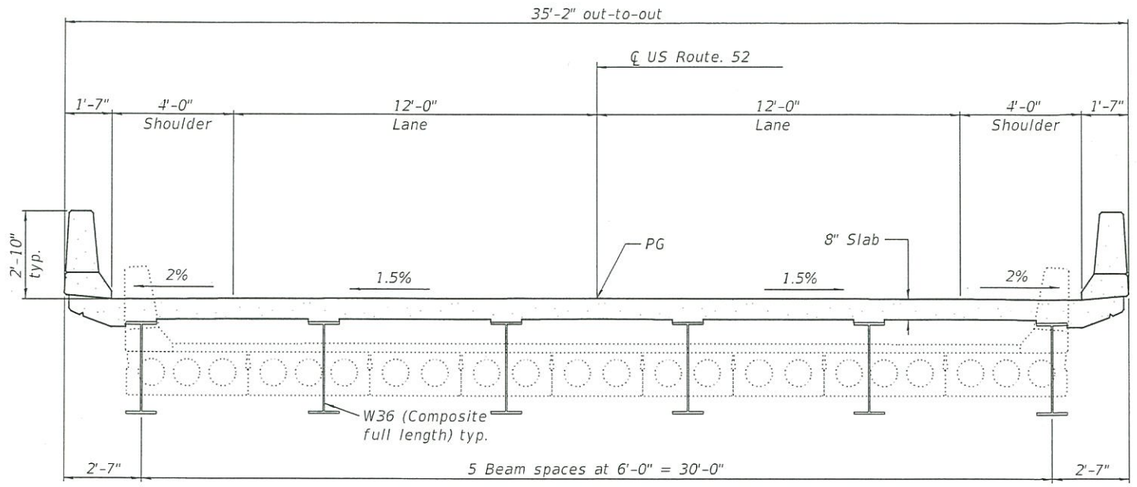

CROSS SECTION

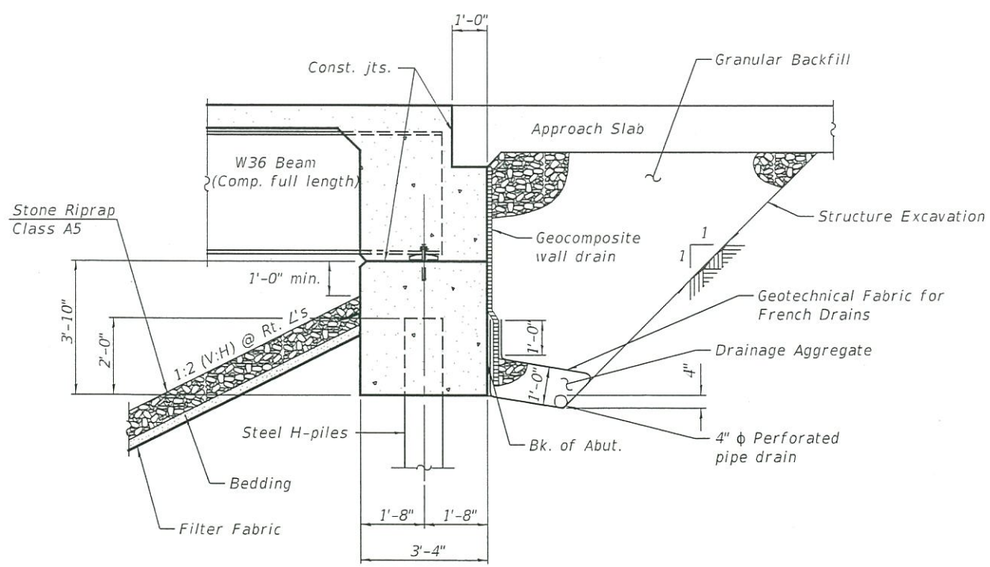

SECTION THRU INTEGRAL ABUTMENT

(Horiz. dim. @ Rt. ∠'s)

APPROVED

JUN 28 2017

AS A BASIS FOR
PREPARATION OF DETAILED PLANS

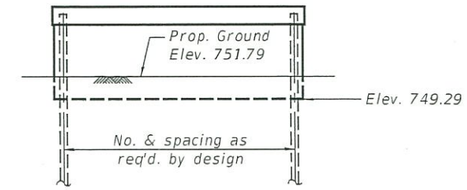

PIER 1 SKETCH

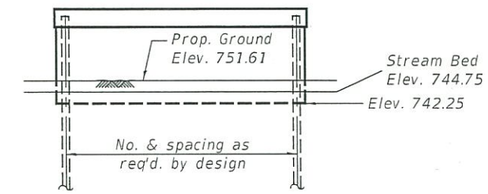

PIER 2 SKETCH

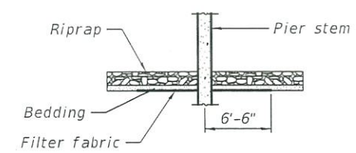

SECTION C-C

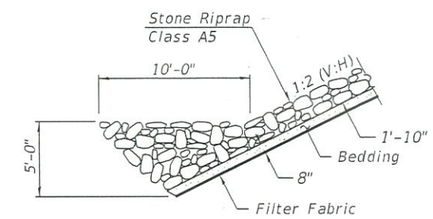

SECTION A-A

WATERWAY INFORMATION

Drainage Area = 46.8 sq. mi.
Existing Overtopping Elev. = 761.1 at Sta. 17+85
Proposed Overtopping Elev. = 762.0 at Sta. 17+85

Flood Event	Freq. Yr.	Discharge CFS	Opening Sq. Ft. Exist.	Opening Sq. Ft. Prop.	Nat. H.W.E.	Head - Ft. Exist.	Head - Ft. Prop.	Headwater El. Exist.	Headwater El. Prop.
	10	3500	685	709	758.5	1.2	0.9	759.7	759.4
Design	50	5530	756	908	759.6	1.8	1.4	761.4	761.0
Base	100	6430	776	962	759.9	1.7	1.4	761.6	761.3
Scour Design Check	200	7375	822	1038	760.3	1.7	1.6	762.0	761.9
Overtop Existing	40	5000	737	-	759.4	1.7	-	761.1	-
Overtop Proposed	300	7750	-	1061	760.4	-	1.7	-	762.1
Max. Calc.	500	8680	861	1117	760.7	1.7	1.5	762.4	762.2

10 Year Velocity Through Existing Bridge = 5.1 ft/s
10 Year Velocity Through Proposed Bridge = 4.9 ft/s

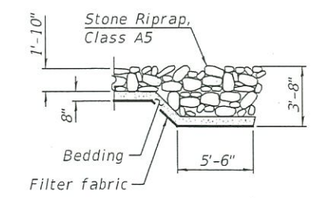

SECTION B-B

DESIGN SCOUR ELEVATION TABLE

Event / Limit State	Design Scour Elevations (ft.) W. Abut.	Pier 1	Pier 2	E. Abut.	Item 113
Q100	758.65	734.80	728.40	759.05	5
Q200	758.65	732.80	726.40	759.05	
Design	758.65	734.80	728.40	759.05	
Check	758.65	732.80	726.40	759.05	

DETAILS
U.S. ROUTE 52 OVER
ELKHORN CREEK
F.A.S. RTE. 2079 - SEC. 16BR-1
OGLE COUNTY
STATION 25+38.57
STRUCTURE NO. 071-0098

DESIGNED -	NEPHTALI RIVERA-MARTINEZ
CHECKED -	AL-BARRAE SHEBIB
DRAWN -	IAN ANDREWS
CHECKED -	N.R.M., A.R.S.

JUNE 28, 2017

STATE OF ILLINOIS
DEPARTMENT OF TRANSPORTATION

SHEET NO. 2 OF 2 SHEETS

F.A.S. RTE.	SECTION	COUNTY	TOTAL SHEETS	SHEET NO.
2079	16BR-1	OGLE	2	2
		CONTRACT NO. 64H57		
		ILLINOIS FED. AID PROJECT		