Bench Mark: NE Bolt in 1st Light Standard Base south of the bridge on east side of Bell School Road. Elevation 754.06.

Exsiting Structure: SN 072-0073 Built in 1968 under FAI Route 74 (Bell School Rd.) Section 72-3HB. In 1977 it underwent rehabilitation work to the deck and abutments. In 1984 the steel was painted. Fire damage to Pier 1 and Beam 1 was repaired in 2001. In 2009 protective shield was added over I-74. The bridge has a four span continuous steel girder superstructure on spill thru type abutments and multi-column piers. It is 237'-2" bk-bk abut. and 58'-0" o-o deck. The bridge will be reconstructed as shown. Traffic is to be detoured and the road closed during construction.

No salvage.

APPROVED

OCT 17 2017

AS A BASIS FOR
PREPARATION OF DETAILED PLANS

SCOPE OF WORK

1. Remove and replace existing superstructure.
2. Remove and replace abutments
3. Replace existing bearings with new fixed and elastomeric bearings.
4. Repair the piers.
5. Replace slopewalls.

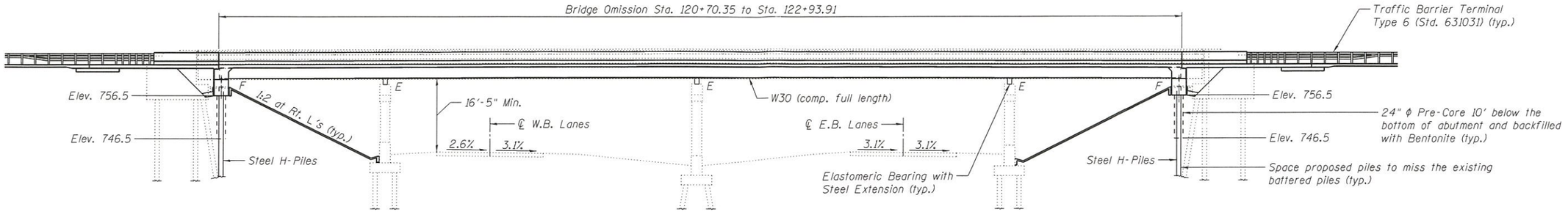

ELEVATION

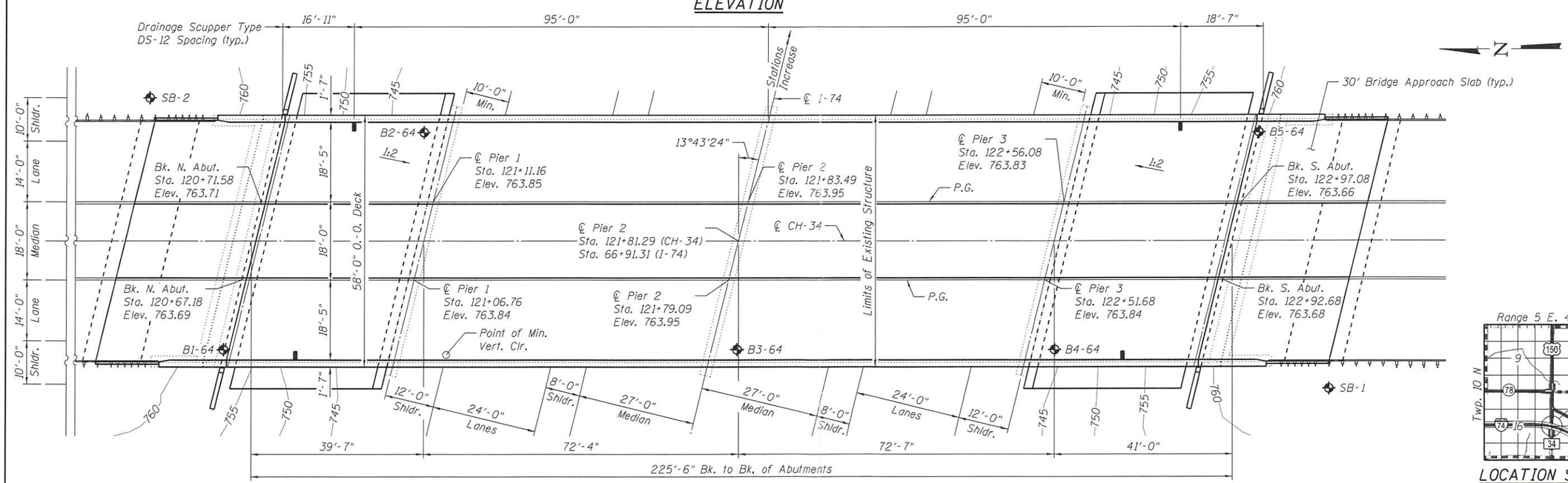

PLAN

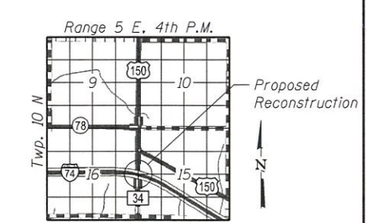

LOCATION SKETCH

HIGHWAY CLASSIFICATION

FAP Route 22 - CH 34
Functional Class: Minor Arterial
ADT: 2,050 (2012); 1,965 (2032)
ADTT: 205 (2012); 197 (2032)
DHV: 205
Design Speed: 60 m.p.h.
Posted Speed: 55 m.p.h.
Directional Distribution: 50% / 50%
Two-Way Traffic

FAI Route 74
Functional Class: Interstate
ADT: 14,800 (2013); 16,780 (2032)
ADTT: 3,108 (2013); 3,524 (2032)
DHV = 1,480
Design Speed: 65 m.p.h.
Posted Speed: 70 m.p.h.
Directional Distribution: 50% / 50%
Two-Way Traffic

SEISMIC DATA

New Construction

Seismic Performance Zone (SPZ) = 1
Design Spectral Acceleraion at 1.0 sec. = 0.075g
Design Spectral Acceleraion at 0.2 sec. = 0.122g
Soil Site Class = C

Existing Piers

Seismic Performance Category (SPC) = A
Horizontal Bedrock Acceleraion Coefficient = 0.041g
Site Coefficient = 1.0

DESIGN SPECIFICATIONS (New Constr.)

2014 AASHTO LRFD Bridge Design Specifications. 7th Edition with 2015 and 2016 Interims

Existing Piers

1995 FHWA Seismic Retrofitting Manual for Highway Bridges

LOADING HL-93

Allow 25#/sq. ft. for future wearing surface.

DESIGN STRESSES

FIELD UNITS (New Construction)

f'c = 3,500 psi
f'c = 4,000 psi (Superstructure Concrete)
fy = 60,000 psi (Reinforcement)
fy = 50,000 psi (M270 Grade 50)

FIELD UNITS (Exist. Piers)

f'c = 3,500 psi
fy = 40,000 psi (Reinforcement)

GENERAL PLAN
CH-34 (BELL SCHOOL ROAD) OVER I-74
FAI ROUTE 74 - SECTION 72-3HB
PEORIA COUNTY
STATION 121+81.29
STRUCTURE NUMBER 072-0073

QUIGG ENGINEERING INC

USER NAME = rwhiteside	DESIGNED - CFS	REVISED	
07200073-68C57-001-TSL.dgn	CHECKED - RPW	REVISED	
PLOT SCALE = 0:2.0000 ':' / in.	DRAWN - CFS	REVISED	
PLOT DATE = 9/11/2017	CHECKED - MDC	REVISED	

STATE OF ILLINOIS
DEPARTMENT OF TRANSPORTATION

GENERAL PLAN
STRUCTURE NO. 072-0073
SHEET NO. 1 OF 2 SHEETS

F.A.I. RTE.	SECTION	COUNTY	TOTAL SHEETS	SHEET NO.
74	72-3HB	PEORIA	2	1
		CONTRACT NO. 68C57		
	ILLINOIS	FED. AID PROJECT		

FILE NAME = \\Quigg\Projects\Projects\2011 JOBS\11-10 Upchurch PTB 158 Item 23 Various Ph I and II District 4\Work Order 12\CADD\CADD Sheets\07200073-68C57-001-TSL.dgn
MODEL = Default
PLOT DRIVER = 1001.PDF.pltcfg

APPROVED

OCT 17 2017

AS A BASIS FOR
PREPARATION OF DETAILED PLANS

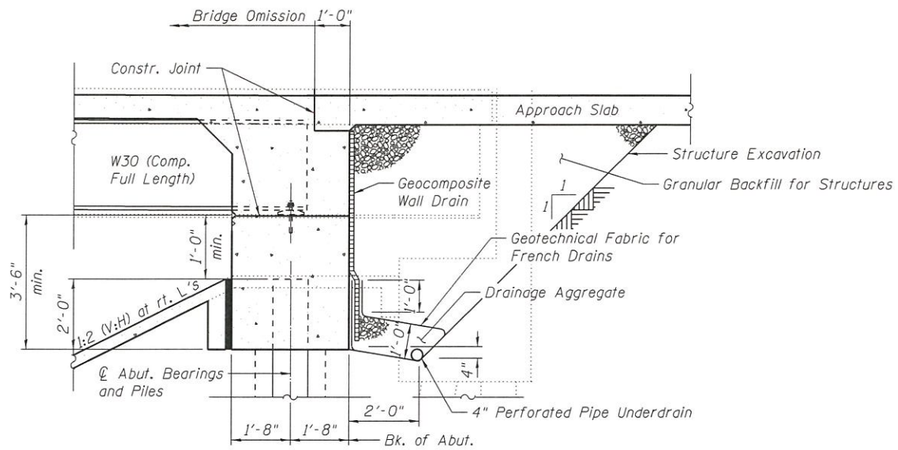

SECTION THRU INTEGRAL ABUTMENT
(Horiz. dim. @ Rt. L's)

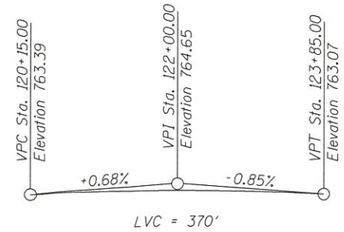

PROFILE GRADE CH-34
(along P.G.)

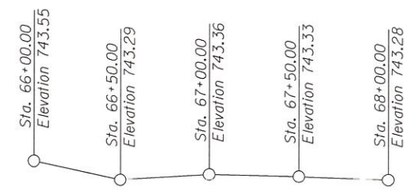

PROFILE GRADE I-74 W.B.
(along ℄ W.B. Lanes)

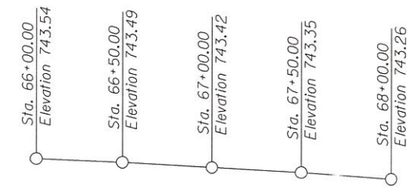

PROFILE GRADE I-74 E.B.
(along ℄ E.B. Lanes)

Existing Curve 17421
PI Sta. = 68+86.10
Δ = 30°45'12" (RT)
D = 1°0'0"
R = 5,729.58'
T = 1,629.39'
L = 3,175.33'
E = 227.24'
PC Sta. = 52+56.51
PT Sta. = 84+31.84

EXIST. HORZ. CURVE I-74

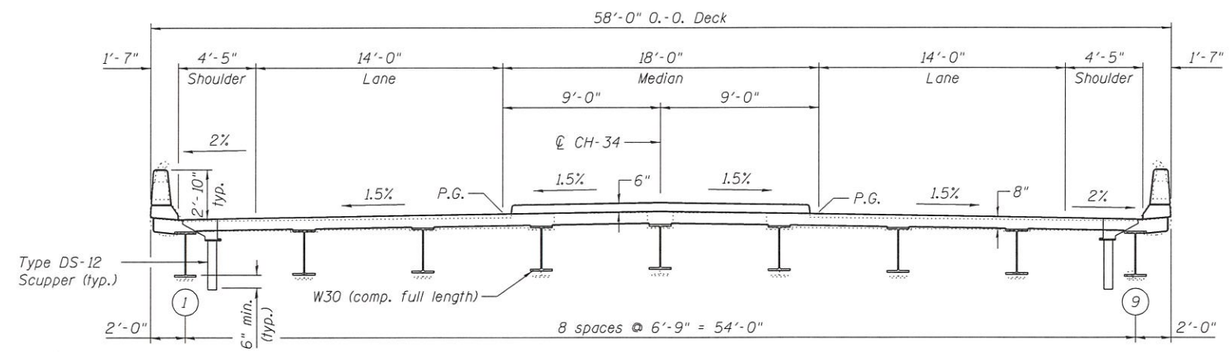

PROPOSED STRUCTURE CROSS SECTION
(Looking South)

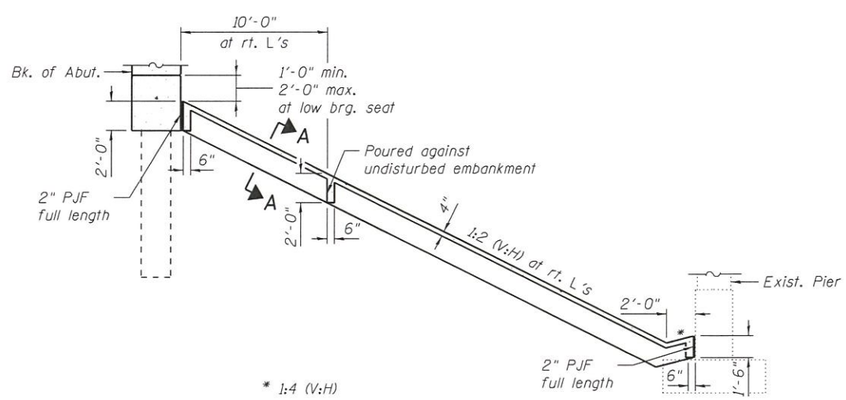

SECTION THRU
CONCRETE SLOPEWALL

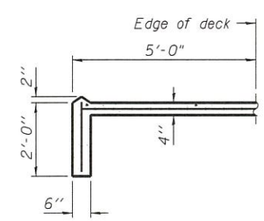

SECTION A-A

DETAILS
CH-34 (BELL SCHOOL ROAD) OVER I-74
FAI ROUTE 74 - SECTION 72-3HB
PEORIA COUNTY
STATION 121+81.29
STRUCTURE NUMBER 072-0073

FILE NAME = \\Quigg\Projects\2011 JOBS\11-10 Upchurch PTB 158 Item 23 Various Ph I and II District 4\Work Order 12\CADD\CADD Sheets\0720073-68C57-002-TSL.dgn
MODEL = Default
PLOT DRIVER = IDOT.PDF.pltcfg

QUIGG ENGINEERING INC	USER NAME = rwhiteside	DESIGNED - CFS	REVISED	STATE OF ILLINOIS DEPARTMENT OF TRANSPORTATION	DETAILS STRUCTURE NO. 072-0073	F.A.I. RTE.	SECTION	COUNTY	TOTAL SHEETS / SHEET NO.
	0720073-68C57-002-TSL.dgn	CHECKED - RPW	REVISED			74	72-3HB	PEORIA	2 / 2
	PLOT SCALE = 0:2.0000 ':' / in.	DRAWN - CFS	REVISED					CONTRACT NO. 68C57	
	PLOT DATE = 9/11/2017	CHECKED - MDC	REVISED		SHEET NO. 2 OF 2 SHEETS		ILLINOIS FED. AID PROJECT		