Bench Mark MLK-6: Chiseled square centered on top of the flattop area of a concrete wingwall located at the northwest corner of tunnel SN 082-0013 for connector exit lane to 3rd Street and Eads Bridge, which runs under East MLK Bridge Approach in East St. Louis, Illinois. Elevation NAVD 88 = 428.576

Existing Structure: The existing retaining wall does not have a structure number. It was constructed in 1965 as part of the F.A.I. Route 70 project I-70-1(76)1. It is a cast-in-place concrete wall on a footing with concrete piles.

The existing structure is to be removed and replaced.

MLK Bridge Approach is to be completely closed to traffic during construction. Traffic is to be maintained by detouring onto adjacent structures. Lane closures will be utilized to maintain traffic on I-55SB/64WB.

No salvage.

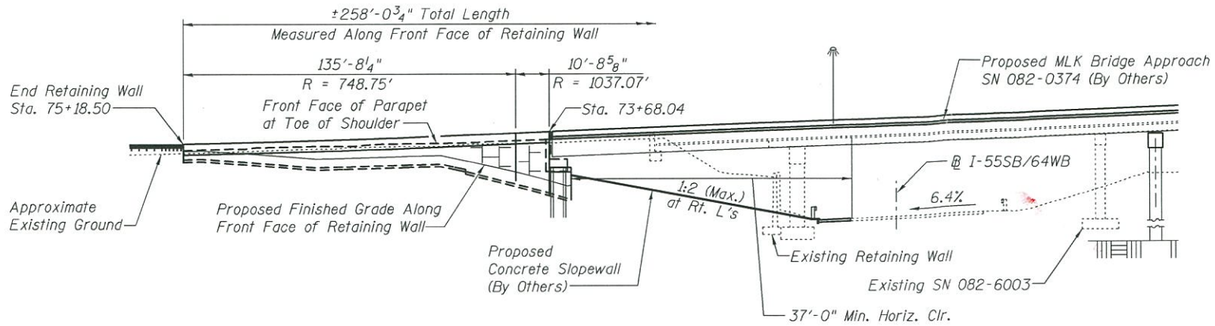

ELEVATION

(Looking South)

See sheet 2 for Unfolded Elevation View.

CURVE C3 DATA

P.I. Sta. = 125+66.38
Δ = 21° 41' 42" (RT)
D = 2° 44' 22"
R = 2,091.61'
T = 400.79'
L = 791.99'
E = 38.05'
e = -
T.R. = -
S.E. Run = -
P.C. Sta. = 121+65.59
P.T. Sta. = 129+57.58

CURVE 21 DATA

P.I. Sta. = 74+81.50
Δ = 37° 27' 17" (LT)
D = 5° 23' 00"
R = 1,064.32'
T = 360.82'
L = 695.75'
E = 59.50'
e = 4.7%
T.R. = 31'
S.E. Run = 99'
P.C. Sta. = 71+20.68
P.T. Sta. = 78+16.44

DESIGN SPECIFICATIONS

2014 AASHTO LRFD Bridge Design Specifications, 7th Edition with 2015 and 2016 Interims

DESIGN STRESSES

FIELD UNITS

f'_c = 3,500 psi
f_y = 60,000 psi (reinforcement)

PRECAST UNITS

f'_c = 4,000 psi (precast face panels)

HIGHWAY CLASSIFICATION

F.A.P. Rte. 799 - MLK Bridge Approach
Functional Class: Other Principal Arterial
ADT: 7,600 (2018); 8,700 (2038)
DHV: 957 (2038)
ADTT: SU = 1.9% MU = 1.5%
Design Speed: 50 m.p.h.
Posted Speed: 45 m.p.h.
Two-Way Traffic
Directional Distribution: 57% (WB); 43% (EB)

HIGHWAY CLASSIFICATION

F.A.I. Rte. 55/64
Functional Class: Interstate
ADT: 48,700 (2018); 59,400 (2038)
DHV: 6534 (2038)
ADTT: SU = 2.4% MU = 7.8%
Design Speed: 60 m.p.h.
Posted Speed: 50 m.p.h.
One-Way Traffic

APPROVED

MAR 0 2 2017

AS A BASIS FOR PREPARATION OF DETAILED PLANS

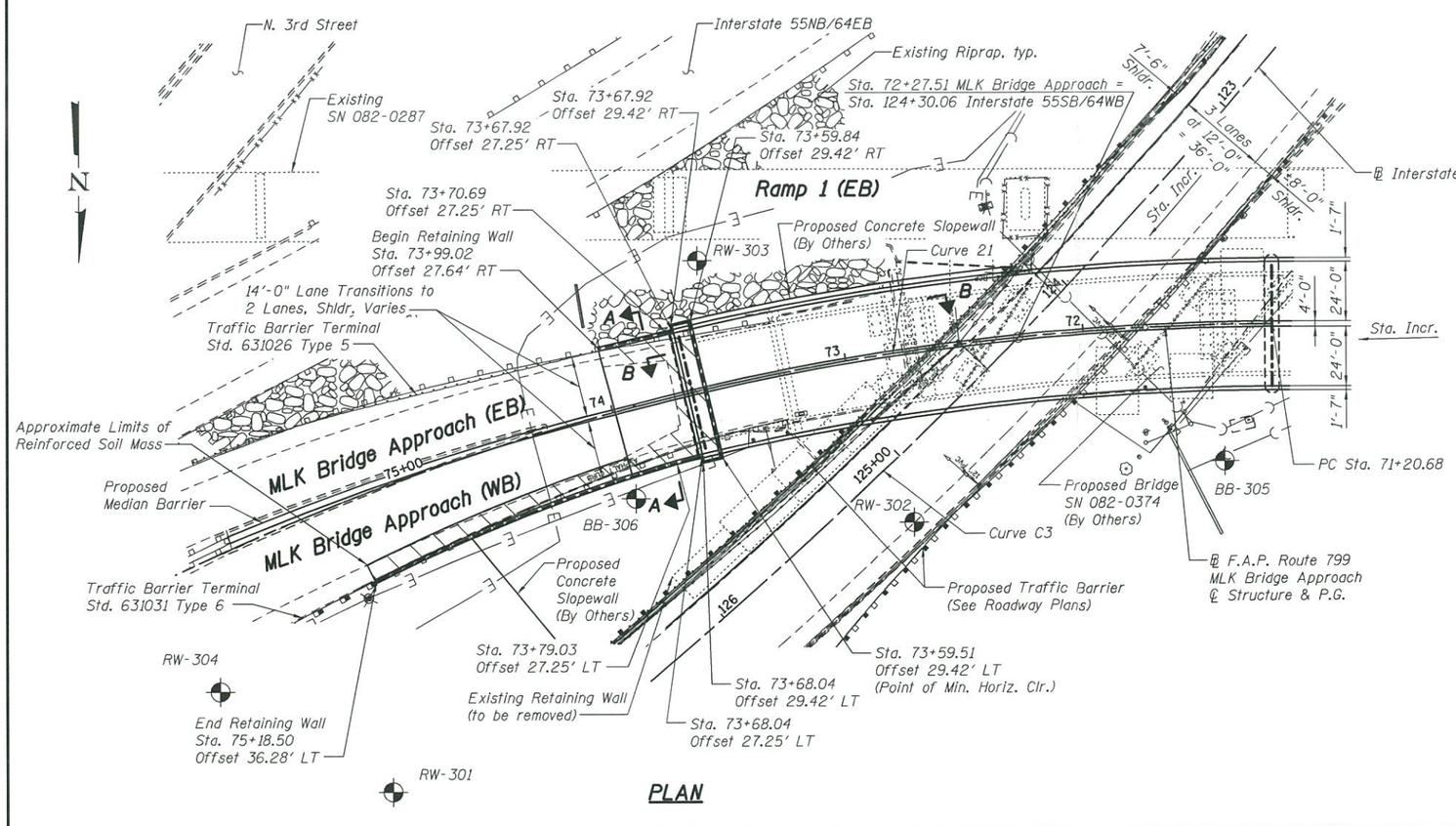

PLAN

LEGEND

Reinforced Soil Mass

MSE Wall Panels

Soil Borings

Notes:
Wall stations and offsets are given to the front face (FF) of the wall and are measured from the baseline of MLK Bridge Approach.
For Section A-A, see sheet 3.
For Section B-B, see sheet 4.
Existing utilities shown will be relocated to avoid any conflicts during construction.

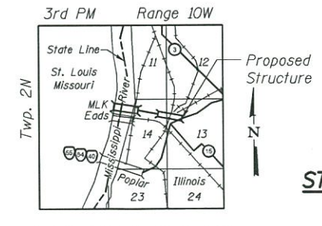

LOCATION SKETCH

GENERAL PLAN
MLK BRIDGE APPROACH
F.A.P. ROUTE 799 SEC. 1BR-1-1
ST. CLAIR COUNTY
STATION 73+99.02 (EB) TO 75+18.50 (WB)
STRUCTURE NO. 082-W315

MODJESKI and MASTERS Experience great bridges.	USER NAME =	DESIGNED - ZJB	REVISED	STATE OF ILLINOIS DEPARTMENT OF TRANSPORTATION	GENERAL PLAN	F.A.P. RTE.	SECTION	COUNTY	TOTAL SHEETS	SHEET NO.
		CHECKED - JMH	REVISED			799	1BR-1-1	ST. CLAIR		
	PLOT SCALE =	DRAWN - AEC	REVISED					CONTRACT NO. 76G39		
	PLOT DATE = 02/01/2017	CHECKED - JMH	REVISED		SHEET NO. 1 OF 4 SHEETS		ILLINOIS	FED. AID PROJECT		

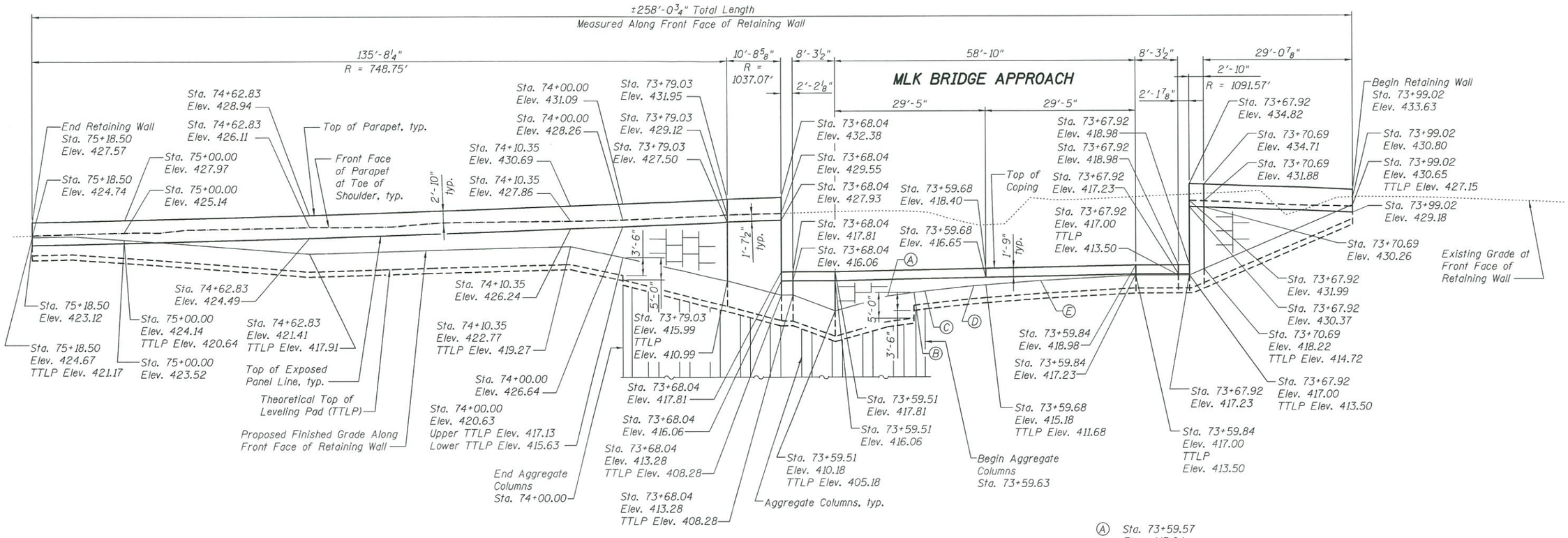

UNFOLDED ELEVATION VIEW

Ⓐ Sta. 73+59.57
Elev. 413.04
TTLP Elev. 408.04

Ⓑ Sta. 73+59.61
Elev. 413.89
Upper TTLP Elev. 410.39
Lower TTLP Elev. 408.89

Ⓒ Sta. 73+59.62
Elev. 414.00
TTLP Elev. 410.50

Ⓓ Sta. 73+59.67
Elev. 415.00
TTLP Elev. 411.50

Ⓔ Sta. 73+59.74
Elev. 416.00
TTLP Elev. 412.50

APPROVED
MAR 0 2 2017
AS A BASIS FOR
PREPARATION OF DETAILED PLANS

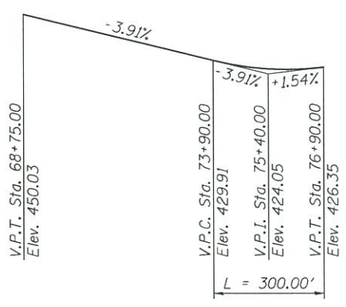

PROFILE GRADE
(Along MLK Bridge Approach)

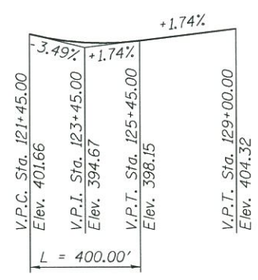

PROFILE GRADE
(Along I-55SB/64WB)
(Original Design)

UNFOLDED ELEVATION VIEW
MLK BRIDGE APPROACH
F.A.P. ROUTE 799 SEC. 1BR-1-1
ST. CLAIR COUNTY
STATION 73+99.02 (EB) TO 75+18.50 (WB)
STRUCTURE NO. 082-W315

MODJESKI and MASTERS Experience great bridges.	USER NAME =	DESIGNED - ZJB	REVISED
		CHECKED - JMH	REVISED
	PLOT SCALE =	DRAWN - AEC	REVISED
	PLOT DATE = 02/01/2017	CHECKED - JMH	REVISED

STATE OF ILLINOIS
DEPARTMENT OF TRANSPORTATION

UNFOLDED ELEVATION
SHEET NO. 2 OF 4 SHEETS

F.A.P. RTE.	SECTION	COUNTY	TOTAL SHEETS	SHEET NO.
799	1BR-1-1	ST. CLAIR		
		CONTRACT NO. 76G39		
		ILLINOIS FED. AID PROJECT		

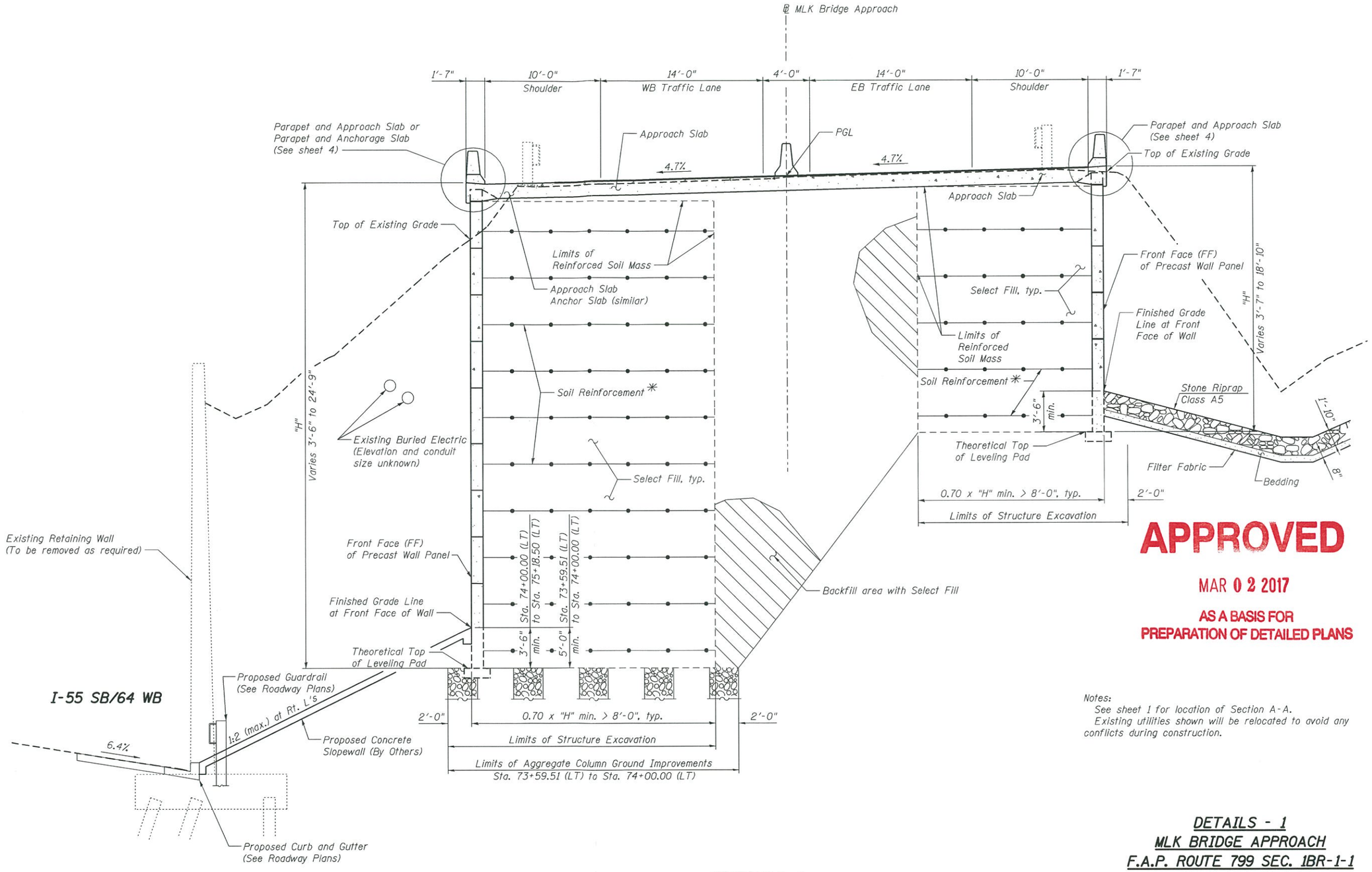

APPROVED

MAR 0 2 2017

AS A BASIS FOR
PREPARATION OF DETAILED PLANS

Notes:
See sheet 1 for location of Section A-A.
Existing utilities shown will be relocated to avoid any conflicts during construction.

* The M.S.E. wall supplier's internal stability design shall account for the anchorage slab's bearing pressure surcharge of 1.0 ksf and horizontal sliding force of 0.5 kips/ft. of wall.

SECTION A-A

(Typical Wall Section at Approach Pavement)

DETAILS - 1
MLK BRIDGE APPROACH
F.A.P. ROUTE 799 SEC. 1BR-1-1
ST. CLAIR COUNTY
STATION 73+99.02 (EB) TO 75+18.50 (WB)
STRUCTURE NO. 082-W315

MODJESKI and MASTERS Experience great bridges.	USER NAME =	DESIGNED - ZJB	REVISED
		CHECKED - JMH	REVISED
	PLOT SCALE =	DRAWN - AEC	REVISED
	PLOT DATE = 02/01/2017	CHECKED - JMH	REVISED

STATE OF ILLINOIS
DEPARTMENT OF TRANSPORTATION

DETAILS – 1

SHEET NO. 3 OF 4 SHEETS

F.A.P. RTE.	SECTION	COUNTY	TOTAL SHEETS	SHEET NO.
799	1BR-1-1	ST. CLAIR		
		CONTRACT NO. 76G39		
		ILLINOIS FED. AID PROJECT		

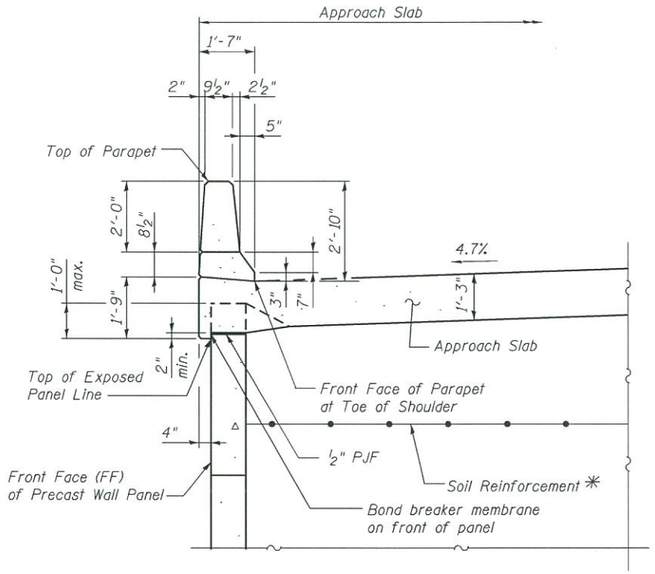

PARAPET AND APPROACH SLAB DETAIL

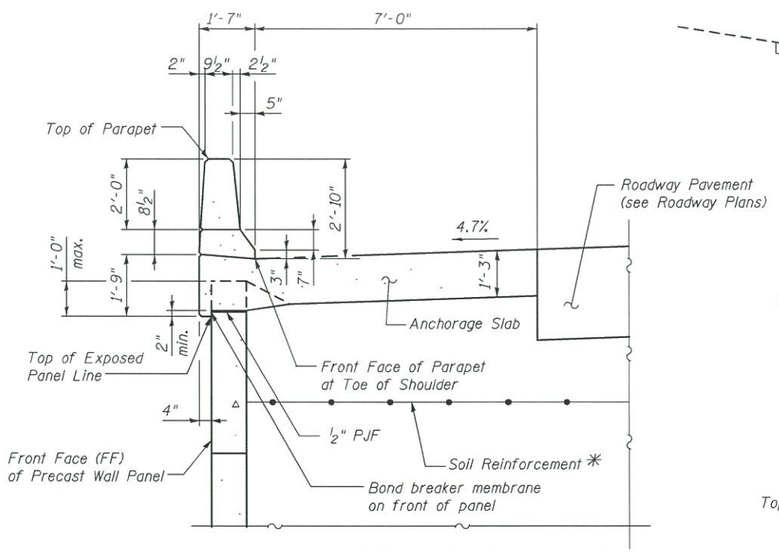

PARAPET AND ANCHORAGE SLAB DETAIL

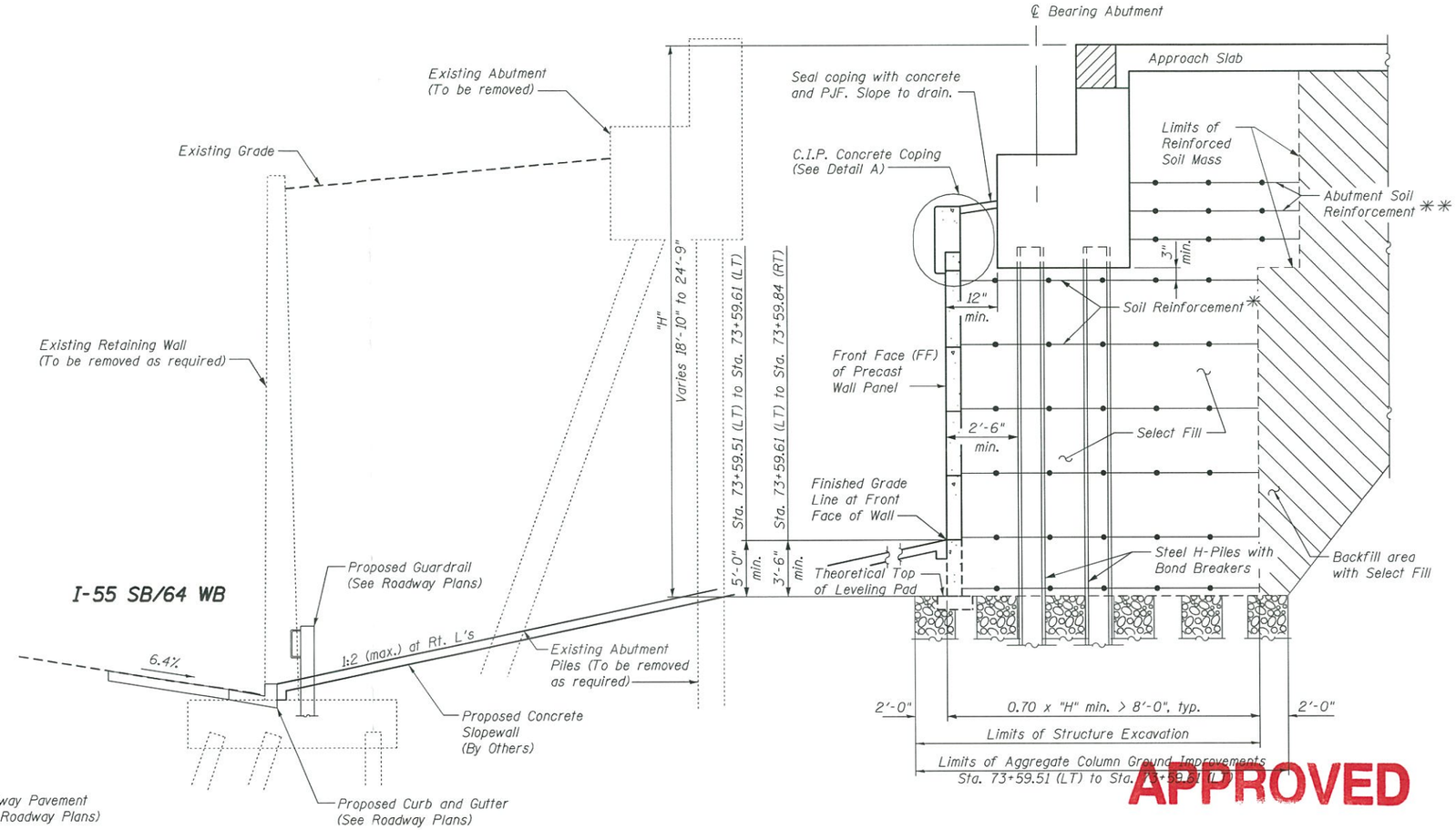

SECTION B-B

(Typical Wall Section Thru Abutment)

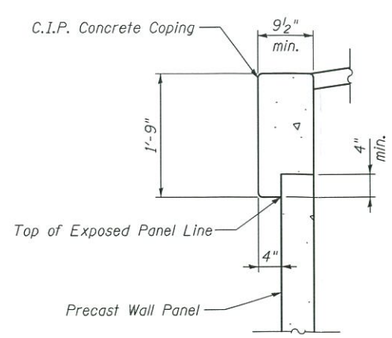

DETAIL A
C.I.P. CONCRETE COPING

* The M.S.E. wall supplier's internal stability design shall account for the anchorage slab's bearing pressure surcharge of 1.0 ksf and horizontal sliding force of 0.5 kips/ft. of wall.

** The M.S.E. wall supplier shall design the abutment soil reinforcement to resist a horizontal force of 3.25 kips/ft. of abutment.

APPROVED

MAR 0 2 2017

AS A BASIS FOR PREPARATION OF DETAILED PLANS

Notes:
See Proposed Structure SN 082-0374 Plans for abutment and slopewall details.
See sheet 1 for location of Section B-B.

DETAILS - 2
MLK BRIDGE APPROACH
F.A.P. ROUTE 799 SEC. 1BR-1-1
ST. CLAIR COUNTY
STATION 73+99.02 (EB) TO 75+18.50 (WB)
STRUCTURE NO. 082-W315

MODJESKI and MASTERS — Experience great bridges.	USER NAME =	DESIGNED - ZJB	REVISED
		CHECKED - JMH	REVISED
	PLOT SCALE =	DRAWN - AEC	REVISED
	PLOT DATE = 02/01/2017	CHECKED - JMH	REVISED

STATE OF ILLINOIS
DEPARTMENT OF TRANSPORTATION

DETAILS – 2

SHEET NO. 4 OF 4 SHEETS

F.A.P. RTE.	SECTION	COUNTY	TOTAL SHEETS	SHEET NO.
799	1BR-1-1	ST. CLAIR		
		CONTRACT NO. 76G39		
		ILLINOIS FED. AID PROJECT		