Bench Mark: Chiseled square at NW corner of the curb at Sta.64+85.51, Rt. 16.23 ft., Elev. 652.77.

Existing Structure: S.N. 088-0002 built in 1924 as Route 30, Section 11A,B&C. The main span consisted of two through steel trusses with concrete deck. The outer three spans consisted of reinforced concrete t-beams. The substructure consisted of closed abutments and solid wall type piers, supported on 12" dia. untreated timber piles.
In 1984 the bridge was reconstructed as F.A. Route 643(S.B.I.-30). The work included replacement of the main span with five composite steel plate girders. The outer three spans 1, 3&4 were replaced with 21"x36" pre-cast deck beams. Approach slabs are constructed with pre-cast concrete slabs. The deck was widened to 33'-0" with a total length of 256'-10". The structure is to be removed and replaced. Two stage construction will be used to maintain traffic.
No salvage.

APPROVED

JAN 28 2020

AS A BASIS FOR PREPARATION OF DETAILED PLANS

HIGHWAY CLASSIFICATION

F.A.P. Rte. 643 - IL. Rte. 17/IL. RT. 91
Functional Class: Minor Arterial (Rural)
ADT: 1950 (2017); 2380 (2037)
ADTT: 230; (2017), 280 (2037)
DHV: 215
Design Speed: 55 m.p.h.
Posted Speed: 55 m.p.h.
Two-Way Traffic
Directional Distribution: 50:50

LOADING HL-93

Allow 50#/sq. ft. for future wearing surface.

DESIGN SPECIFICATIONS

2017 AASHTO LRFD Bridge Design Specifications 8th Edition

DESIGN STRESSES

FIELD UNITS

f'c = 4,000 psi (Superstructure)
f'c = 3,500 psi (Substructure)
fy = 60,000 psi (Reinforcement)
fy = 50,000 psi (M270 Grade 50)
All Structural Steel shall be Galvanized
Limit Dead Load Deflection to 2 in

SEISMIC DATA

Seismic Performance Zone (SPZ) = 1
Design Spectral Acceleration at 1.0 sec. (S_{D1}) = 0.102g
Design Spectral Acceleration at 0.2 sec. (S_{DS}) = 0.157g
Soil Site Class = D

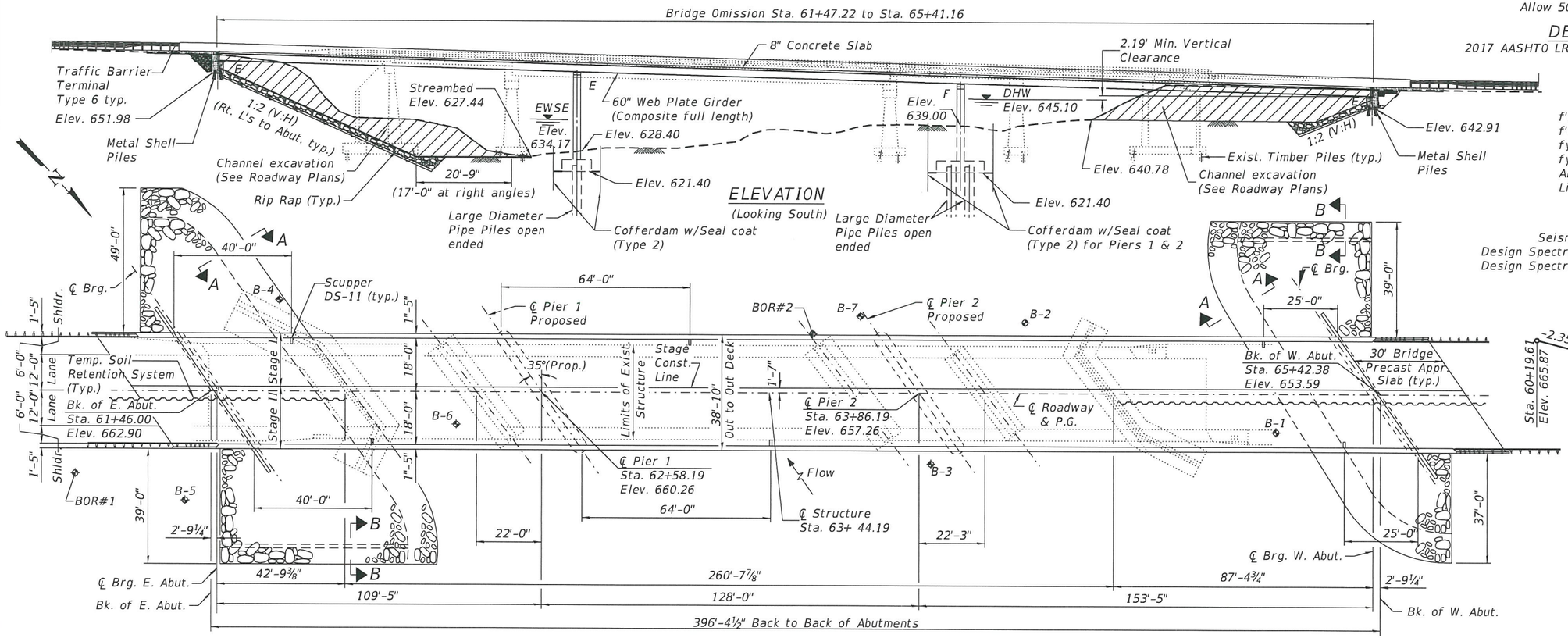

PLAN

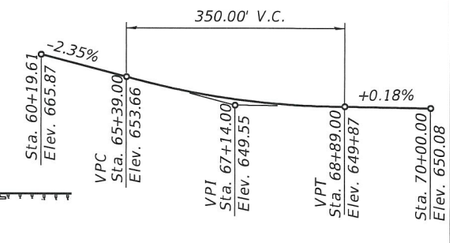

PROFILE GRADE

(Along ℄ of IL Rt. 17/IL Rt. 91)

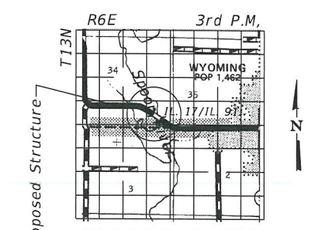

LOCATION SKETCH

LEGEND

- B-1 - 2011 & 2014 Soil Borings
- BOR#1 - 1972 Soil Borings

DESIGN SCOUR ELEVATION TABLE

Design Scour Elevation (ft.)					
Event Limit State	E. Abut.	Pier 1	Pier 2	W. Abut.	Item 113
Q100	651.98	606.8	597.7	642.91	5
Q200	651.98	605.3	596.2	642.91	
Design	651.98	606.8	597.7	642.91	
Check	651.98	605.3	596.2	642.91	

WATERWAY INFORMATION TABLE

Drainage Area = 198 sq. mi.

Existing Overtopping Elev. = 649.65 @ Sta. 68+50
Proposed Overtopping Elev. = 649.86 @ Sta. 68+50

Flood Event	Freq. Yr.	Discharge Cu.Ft./Sec.	Waterway Opening-Sq. Ft. Exist.	Waterway Opening-Sq. Ft. Prop.	Natural H.W.E. Ft.	Head - Ft. Exist.	Head - Ft. Prop.	Headwater El. Ft. Exist.	Headwater El. Ft. Prop.
	10	8,980	1,818	2,560	643.8	1.6	1.3	645.4	645.1
Design	50	13,800	2,070	2,933	645.1	2.5	1.9	647.6	647.0
Base	100	15,900	2,169	3,080	645.6	2.9	2.2	648.5	647.8
Scour Design Check	200	18,035	2,262	3,220	646.1	3.2	2.4	649.3	648.5
Overtopping Exist.	250	18,814	2,296	N/A	646.3	3.4	N/A	649.7	N/A
Overtopping Prop.	N/A	N/A	N/A	N/A	N/A	N/A	N/A	N/A	N/A
Max. Calc.	500	21,110	2,363	3,372	646.7	3.8	2.8	650.5	649.5

GENERAL PLAN & ELEVATION
IL. RT. 17 / IL. RT. 91
OVER SPOON RIVER
F.A.P. 643 - SEC. 11B (BR-1)
STARK COUNTY
STATION 63+44.19
STRUCTURE NO. 088-0030

The Upchurch Group
architects engineers surveyors
Professional Design Firm Corporation License No. 184-003401
123 North 15th Street Mattoon, IL 61938 Phone: 217.235.3177
e-mail: upchurchgroup@upchurchgroup.com

USER NAME = Sta34	DESIGNED RAS	REVISED For BBS Review - 6/18/18
	CHECKED RCS	REVISED For BBS Review - 02/21/19
PLOT SCALE = 40:0.0000 ':' / in.	DRAWN HE	REVISED By TUG - 11/1/19
PLOT DATE = 1/6/2020	CHECKED DNB	REVISED

STATE OF ILLINOIS
DEPARTMENT OF TRANSPORTATION

SHEET NO. 1 OF 4 SHEETS

F.A.P. RTE.	SECTION	COUNTY	TOTAL SHEETS	SHEET NO.
643	11B (BR-1)	STARK		

ILLINOIS FED. AID PROJECT

FILE NAME = P:\Civil_IDOT_DIST4\PTB 191:088 ver PH I-II 31190\4\WD 3 PH II IL 17 IL 91 over Spoon River 31190\4\CAD Sheets\TSL1-088080.dgn

APPROVED

JAN 28 2020

AS A BASIS FOR PREPARATION OF DETAILED PLANS

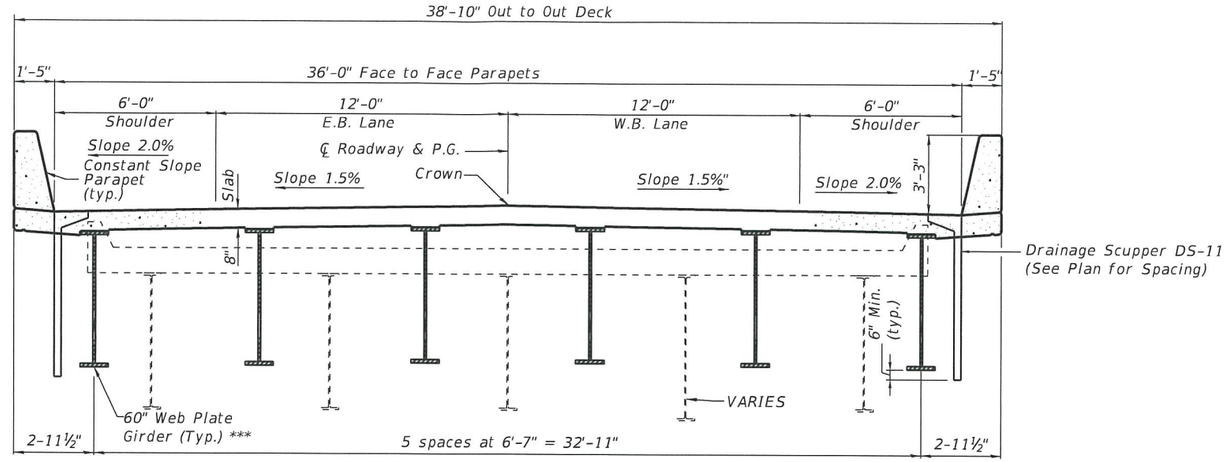

CROSS SECTION

(Looking West)

***Composite full length. All Structural Steel shall be Galvanized

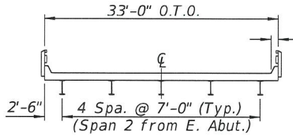

EXISTING STRUCTURE - SPAN 2

(Looking West)

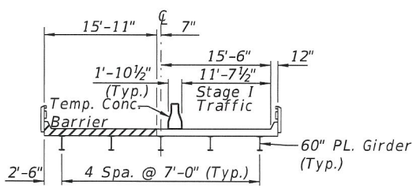

STAGE I REMOVAL - EXISTING SPAN 2

3 Beams to Remain for Stage 1 Traffic

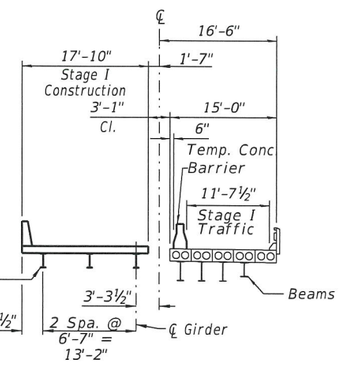

STAGE I CONSTRUCTION - EXISTING SPANS 1, 3 & 4

(Looking West)

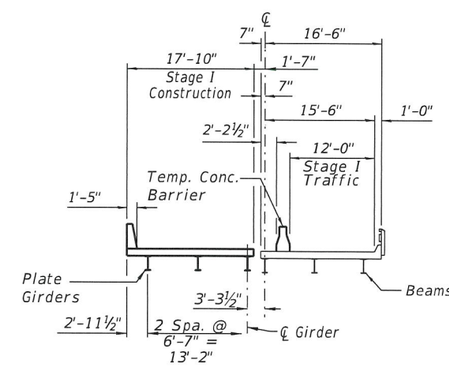

STAGE I CONSTRUCTION - EXISTING SPAN 2

(Looking West)

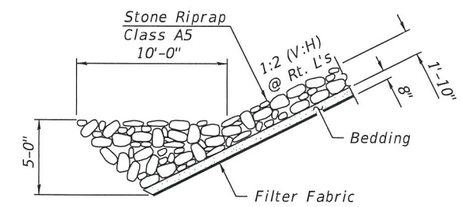

SECTION A-A

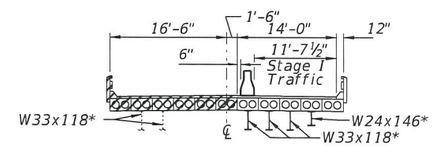

STAGE I REMOVAL - EXISTING SPAN 1

(Looking West)

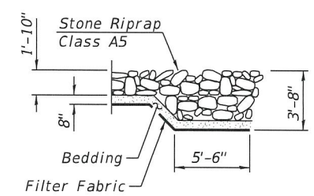

SECTION B-B

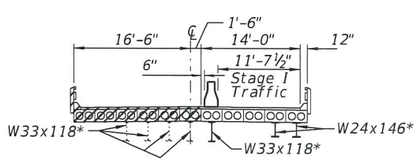

STAGE I REMOVAL - EXISTING SPAN 3

(Looking West)

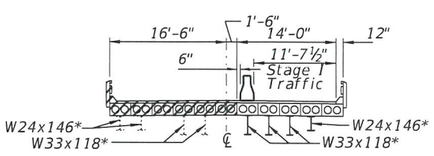

STAGE I REMOVAL - EXISTING SPAN 4

(Looking West)

* Existing Temporary Support Beams

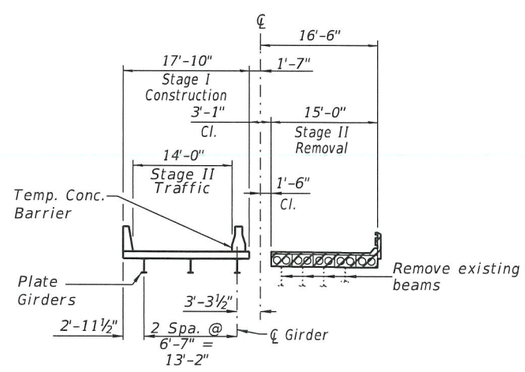

STAGE II REMOVAL - EXISTING SPANS 1, 3 & 4

(Looking West)

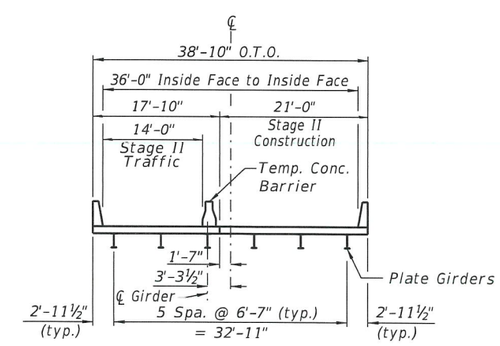

STAGE II CONSTRUCTION

(Looking West)

SECTIONS & DETAILS
IL. RT. 17 / IL. RT. 91
OVER SPOON RIVER
F.A.P. 643 - SEC. 11B (BR-1)
STARK COUNTY
STATION 63+44.19
STRUCTURE NO. 088-0030

The Upchurch Group
architects engineers surveyors
Professional Design Firm Corporation License No. 184-003401
123 North 15th Street Mattoon, IL 61938 Phone: 217.235.3177
e-mail: upchurchgroup@upchurchgroup.com

USER NAME = Sta34	DESIGNED RAS	REVISED For BBS Review - 6/18/18	
	CHECKED RCS	REVISED For BBS Review - 02/21/19	
PLOT SCALE = 21:4.0000 ':' / in.	DRAWN HE	REVISED By TUG - 11/1/19	
PLOT DATE = 1/6/2020	CHECKED DNB	REVISED	

STATE OF ILLINOIS
DEPARTMENT OF TRANSPORTATION

SHEET NO. 2 OF 4 SHEETS

F.A.P. RTE.	SECTION	COUNTY	TOTAL SHEETS	SHEET NO.
643	11B (BR-1)	STARK		
		ILLINOIS FED. AID PROJECT		

FILE NAME = P:\Civil_IDOT_DIST4\PTB 191-008 var PH I-II 3119049\WD 3 PH II IL 17 IL 91 over Spoon River 3119049-03\CAD\Sheets\TS-2-088030.dgn

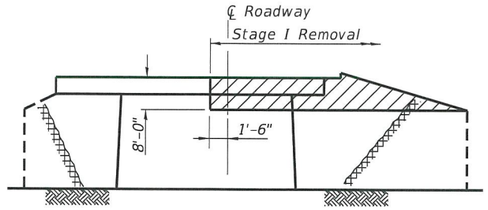

EAST ABUTMENT ELEVATION
(Looking East)

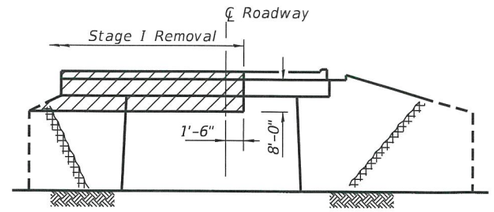

WEST ABUTMENT ELEVATION
(Looking West)

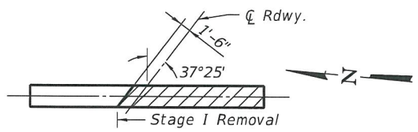

PLAN

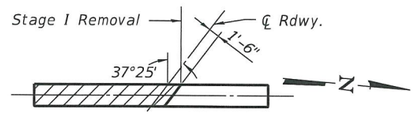

PLAN

STAGE I REMOVAL

LEGEND

Concrete Removal

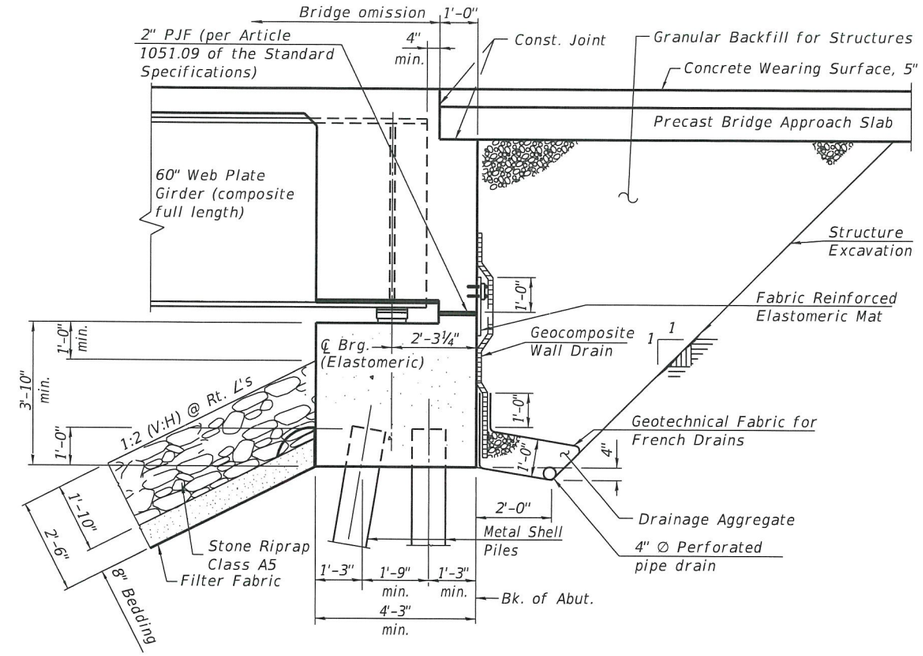

SECTION THRU SEMI-INTEGRAL ABUTMENT
(Horiz. dim. @ Rt. L's)

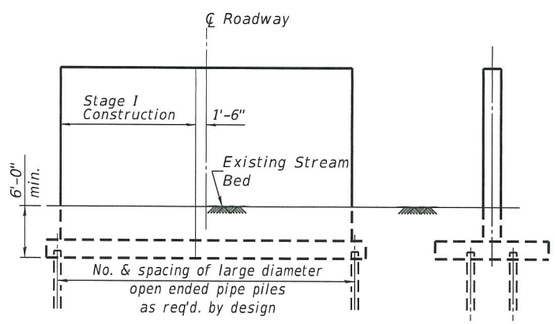

PIER SKETCH
(Solid Wall)
(Looking West)

APPROVED
JAN 28 2020
AS A BASIS FOR PREPARATION OF DETAILED PLANS

SECTIONS & DETAILS
IL. RT. 17 / IL. RT. 91
OVER SPOON RIVER
F.A.P. 643 - SEC. 11B (BR-1)
STARK COUNTY
STATION 63+44.19
STRUCTURE NO. 088-0030

The Upchurch Group
architects engineers surveyors
Professional Design Firm Corporation License No. 184-003401
123 North 15th Street Mattoon, IL 61938 Phone: 217.235.3177
e-mail: upchurchgroup@upchurchgroup.com

USER NAME = Sta34	DESIGNED RAS	REVISED For BBS Review - 6/18/18	
	CHECKED RCS	REVISED For BBS Review - 02/21/19	
PLOT SCALE = 21:4.0000 ':' / in.	DRAWN HE	REVISED By TUG - 11/1/19	
PLOT DATE = 1/6/2020	CHECKED DNB	REVISED	

STATE OF ILLINOIS
DEPARTMENT OF TRANSPORTATION

SHEET NO. 3 OF 4 SHEETS

F.A.P. RTE.	SECTION	COUNTY	TOTAL SHEETS	SHEET NO.
643	11B (BR-1)	STARK		

ILLINOIS FED. AID PROJECT

FILE NAME = P:\Civil_IDOT_DIST4\PTB 191-008 ver PH I-II 31198\49\WO 3 PH II IL 17 IL 91 over Spoon River 31198\49-03\CAD Sheets\TSL3-088B030.dgn

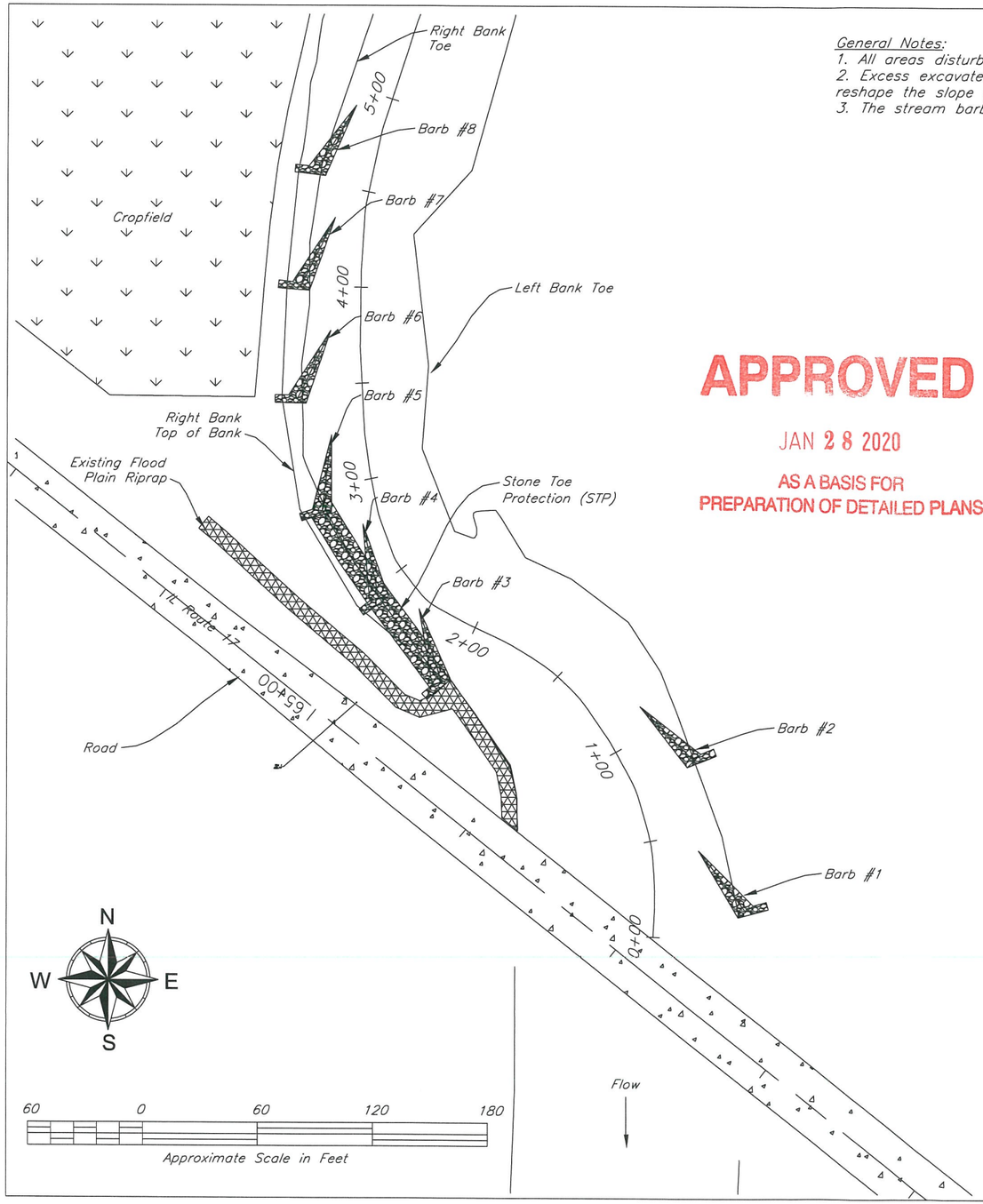

General Notes:
1. All areas disturbed by construction activities including all earthfill and excavation shall be seeded.
2. Excess excavated material may be placed in between the stone toe protection and the adjacent bank to reshape the slope or this area may be left to fill in naturally.
3. The stream barb keys will also act as keys for the stone toe protection.

APPROVED
JAN 28 2020
AS A BASIS FOR
PREPARATION OF DETAILED PLANS

Hatch Legend

= Planned Riprap Stone Toe Protection and Stream Barbs

= Existing Riprap

= IL-Rt. 17 Roadway

Benchmark Table

Name	Elevation	Description
TBM 1	652.77	Chiseled square at NW corner of the curb on the bridge

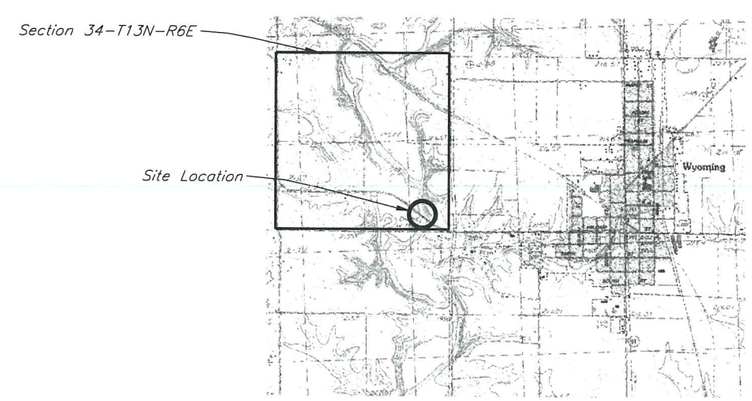

Location Map

		Date
Designed	J. Rudsell	3-1-16
Drawn	J. Rudsell	3-1-16
Checked		
Approved		

Terwilliger/IL Rt. 17
Plan Map

Stark County, Illinois

Section 34-T13N-R6E

United States Department of Agriculture
Natural Resources Conservation Service

File No.
TSL4-0880030.dgn

FILE NAME = P:\Civil\IDOT DISTA\PTB 191-008 var PH I-II 31798\49\WD 3 PH II IL 17 IL 91 over Spoon River 31798\49\CAD Sheets\TSL4-0880030.dgn

The Upchurch Group
architects engineers surveyors
Professional Design Firm Corporation License No. 184-003401
123 North 15th Street Mattoon, IL 61938 Phone: 217.235.3177
e-mail: upchurchgroup@upchurchgroup.com

USER NAME = Sta34	DESIGNED	REVISED For BBS Review - 6/18/18
	CHECKED	REVISED For BBS Review - 01/22/19
PLOT SCALE = 70.0000 ' / in.	DRAWN JPM	REVISED By TUG - 11/1/19
PLOT DATE = 1/6/2020	CHECKED	REVISED

STATE OF ILLINOIS
DEPARTMENT OF TRANSPORTATION

Spoon River Bank Stabilization Plan
At IL 17 & IL 91
SHEET NO. 4 OF 4 SHEETS

F.A.P. RTE.	SECTION	COUNTY	TOTAL SHEETS	SHEET NO.
643	11B (BR-1)	STARK		
	ILLINOIS FED. AID PROJECT			