Benchmark: BM 2516 - Chiseled square on top of the west end of the northerly concrete barrier wall on the west abutment of the westbound bridge of War Memorial Drive US 150 over NE Adams Street (IL-29) at the exit ramp to NE Adams St. (IL 29). Elev. 511.94

Existing Structure: S.N. 090-0070 bridge 39 ft. upstream, constructed 1948. The existing truss bridge is 4,745 ft. long & 33'-2" ft. wide. To be removed after new structure is complete and traffic shifted to new structure. Existing structure to remain open to traffic during construction.

Salvage: A portion of the tops of the existing steel truss will be salvaged for historical display elsewhere. Details will be provided during design.

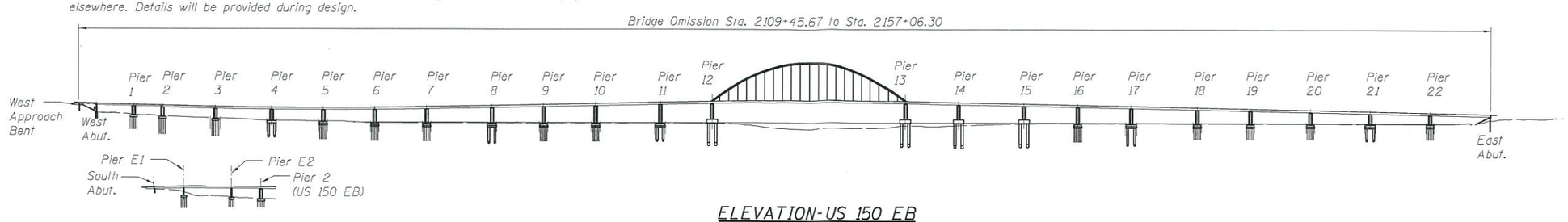

ELEVATION-US 150 EB

ELEVATION-RAMP E

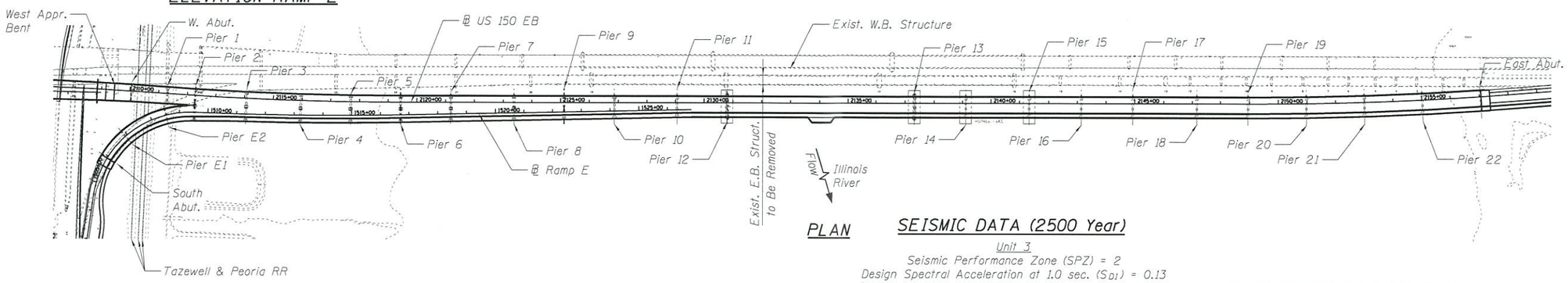

PLAN

SEISMIC DATA (2500 Year)

Unit 3
Seismic Performance Zone (SPZ) = 2
Design Spectral Acceleration at 1.0 sec. (S_{D1}) = 0.13
Design Spectral Acceleration at 0.2 sec. (S_{DS}) = 0.17
Soil Site Class = C

Units 1,2,4,8 & Ramp E
Seismic Performance Zone (SPZ) = 2
Design Spectral Acceleration at 1.0 sec. (S_{D1}) = 0.19
Design Spectral Acceleration at 0.2 sec. (S_{DS}) = 0.23
Soil Site Class = D

Units 5,6 & 7
Seismic Performance Zone (SPZ) = 2
Design Spectral Acceleration at 1.0 sec. (S_{D1}) = 0.28
Design Spectral Acceleration at 0.2 sec. (S_{DS}) = 0.36
Soil Site Class = E

APPROVED
OCT 01 2018
AS A BASIS FOR PREPARATION OF DETAILED PLANS

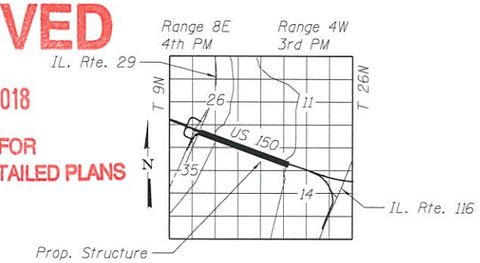

LOCATION SKETCH

DESIGN SPECIFICATIONS

2017 AASHTO LRFD Bridge Design Specifications, 8th Edition

LOADING HL-93

Allow 50#/sq. ft. for future wearing surface.

DESIGN STRESSES

FIELD UNITS

f'c = 3,500 psi
f'c = 4,000 psi (Superstructure Concrete)
fy = 60,000 psi (Reinforcement)
fy = 50,000 psi (M270 Grade 50W)

PRECAST PRESTRESSED UNITS

f'c = 6,000 psi
f'ci = 5,000 psi
fpu = 270,000 psi (½" ϕ low lax. strands)
fpbt = 201,960 psi (½" low lax. strands)

HIGHWAY CLASSIFICATION

F.A.P. Rte. 317 - US 150 EB
Functional Class: Other Principal Arterial
ADT: 21,200 (2013); 21,300 (2040)
ADTT: 210 (2013); 210 (2040)
DHV: 3032
Design Speed: 60 m.p.h.
Posted Speed: 55 m.p.h.
One-Way Traffic

Ramp E
Functional Class: Freeway Ramp
ADT: 3900 (2013); 4450 (2040)
ADTT: 40 (2013); 45 (2040)
DHV: 785
Design Speed: 35 m.p.h.
Posted Speed: 35 m.p.h.
One-Way Traffic

DESIGN SCOUR ELEVATION TABLE

Event/Limit State	Pier 2	Pier 3	Pier 4	Pier 5	Pier 6	Pier 7	Pier 8	Pier 9	Pier 10	Pier 11
0100		439.8	432.8	429.8	425.3	425.1	425.1	425.1	425.1	419.1
0500	460.0	437.5	430.5	427.5	423.0	423.0	423.0	423.0	423.0	415.9
Design	450.5	439.8	432.8	429.8	425.3	425.1	425.1	425.1	425.1	419.1
Check	450.5	437.5	430.5	427.5	423.0	423.0	423.0	423.0	423.0	415.9

Event/Limit State	Pier 12	Pier 13	Pier 14	Pier 15	Pier 16	Pier 17	Pier 18	Pier 19	Pier 20	Pier 21
0100	381.2	381.2	381.2	384.8	409.6	409.6	423.5	423.5	423.5	423.5
0500	379.3	379.3	379.3	382.9	409.6	409.6	423.1	423.1	423.1	423.1
Design	381.2	381.2	381.2	384.8	409.6	409.6	423.5	423.5	423.5	423.5
Check	379.3	379.3	379.3	382.9	409.6	409.6	423.1	423.1	423.1	423.1

Event/Limit State	Pier 22	E. Abut.
0100	423.5	460.1
0500	423.1	460.1
Design	423.5	460.1
Check	423.1	460.1

Item 113 for the structure is 5

WATERWAY INFORMATION

Drainage Area = 14,165 sq. mi. Low Grade Elev. 462.44 @ Sta. 2163+50

Flood	Freq. Yr.	Q C.F.S.	Opening Sq. Ft. Exist.	Opening Sq. Ft. Prop.	Nat. H.W.E.	Head - Ft. Exist.	Head - Ft. Prop.	Headwater El. Exist.	Headwater El. Prop.
	10	67,000	72,825	70,399	454.4	0.0	0.0	454.4	454.4
Design	50	83,000	88,007	85,284	458.1	0.0	0.0	458.1	458.1
Base	100	91,000	93,822	90,383	459.5	0.0	0.0	459.5	459.5
Overtopping									
Max. Calc.	500	114,000	104,445	102,946	462.4	0.0	0.0	462.4	462.4

10 Year Velocity through proposed structure = 0.95 fps

OVERALL SITE PLAN
US 150 E.B. (McCLUGAGE BRIDGE) OVER THE ILLINOIS RIVER (PUBLIC WATERS)
F.A.P. 317 - SECTION (15B;[(102-1),(14HB)]BR)BR
PEORIA/TAZEWELL COUNTIES
STATION 2134+06.00
STRUCTURE NO. 090-0180

FILE NAME = 090-0180-IDOT-1-OverallGP&E
Default

TY·LIN INTERNATIONAL

USER NAME = spantazis	DESIGNED - SP	REVISED -
	DRAWN - SP	REVISED -
PLOT SCALE = 399:11 13/16 ':' / in.	CHECKED - PDF	REVISED -
PLOT DATE = 8/31/2018	DATE - 8/31/18	REVISED -

STATE OF ILLINOIS
DEPARTMENT OF TRANSPORTATION

SCALE: SHEET OF SHEETS STA. TO STA.

F.A.P. RTE.	SECTION	COUNTY	TOTAL SHEETS	SHEET NO.
317	*	PEORIA/TAZEWELL	11	1

CONTRACT NO. 68B46
ILLINOIS FED. AID PROJECT

* (15B;[(102-1),(14HB)]BR)BR

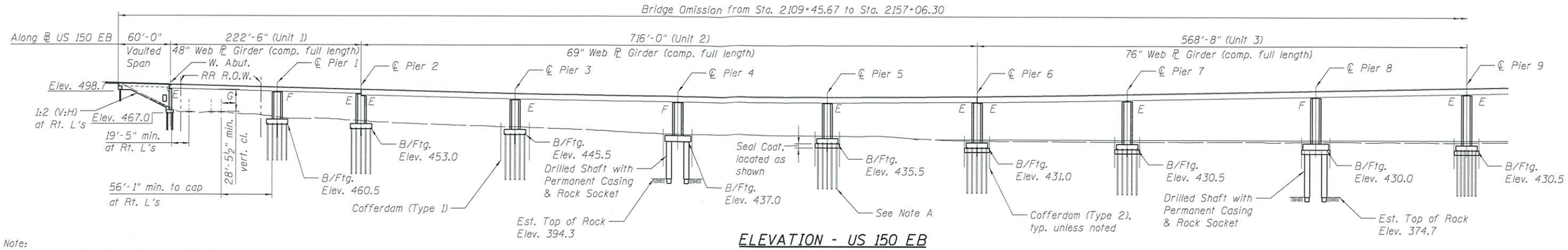

ELEVATION - US 150 EB

Note:
No freefall deck drains will be permitted in the span over the tracks or within 10 ft. of cross arms of a railroad pole line.

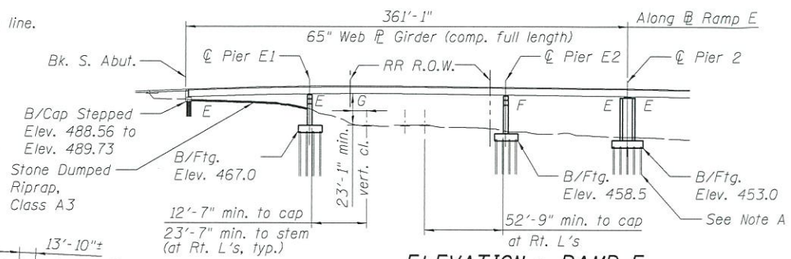

ELEVATION - RAMP E

Note A:

The West Abutment, West Abutment Approach Bent and the South Abutment will have metal shell piles. All remaining substructure units will have HP Piles, except as otherwise noted.

APPROVED

OCT 01 2018

AS A BASIS FOR PREPARATION OF DETAILED PLANS

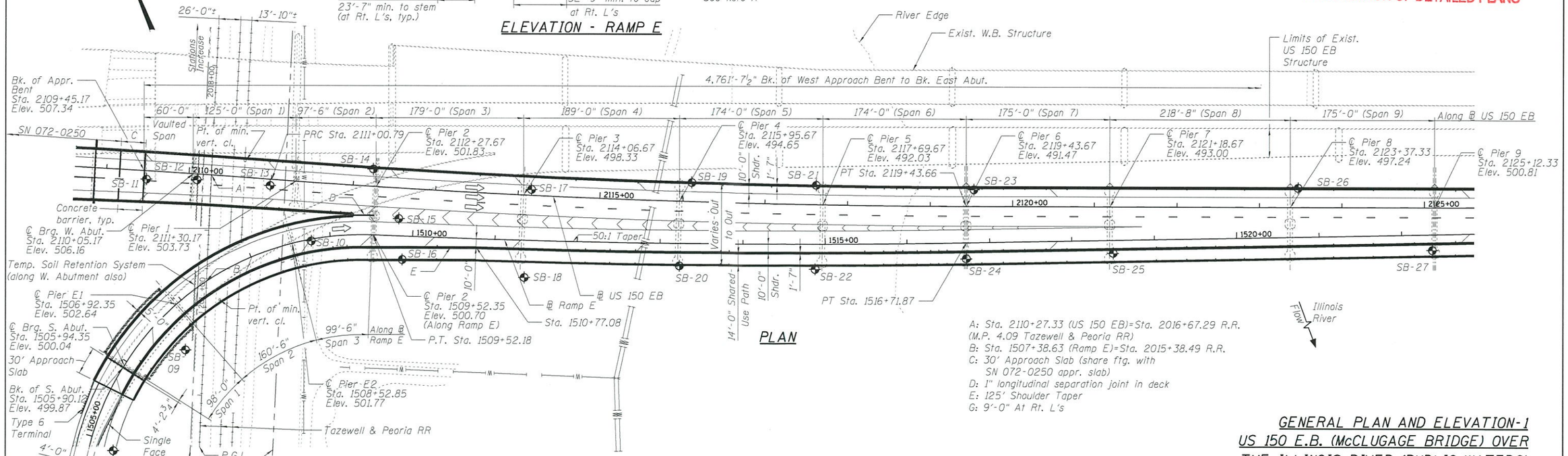

PLAN

A: Sta. 2110+27.33 (US 150 EB)=Sta. 2016+67.29 R.R. (M.P. 4.09 Tazewell & Peoria RR)
B: Sta. 1507+38.63 (Ramp E)=Sta. 2015+38.49 R.R.
C: 30' Approach Slab (share ftg. with SN 072-0250 appr. slab)
D: 1" longitudinal separation joint in deck
E: 125' Shoulder Taper
G: 9'-0" At Rt. L's

Notes:
1. All Elevations are referenced to NAVD 1988 Datum unless noted otherwise. NAVD 1988=NGVD 1929 - 0.30'
2. Light pole type shall be 30' Aluminum pole with 10' davit arm. Spacing to be determined during design.
3. Overhead sign structure to be placed over the structure. Support will be atop Pier 10.
4. Perform Smoothness Grinding to Bridge Deck and Approach Slabs. The Profile Grade Elevations are based on the final elevations after grinding.
5. See Sheet 6 of 11 for drainage scupper type and locations.

GENERAL PLAN AND ELEVATION-1
US 150 E.B. (McCLUGAGE BRIDGE) OVER
THE ILLINOIS RIVER (PUBLIC WATERS)
F.A.P. 317 - SECTION (15B;[(102-1),(14HB)]BR)BR
PEORIA/TAZEWELL COUNTIES
STATION 2134+06.00
STRUCTURE NO. 090-0180

FILE NAME = 090-0180-1001-2-GP&E-1
Default

TYLIN INTERNATIONAL	USER NAME = spantazis	DESIGNED - SP	REVISED -
		DRAWN - SP	REVISED -
	PLOT SCALE = 119:11 15/16 ':' / in.	CHECKED - PDF	REVISED -
	PLOT DATE = 8/31/2018	DATE - 8/31/18	REVISED -

STATE OF ILLINOIS
DEPARTMENT OF TRANSPORTATION

SCALE: SHEET OF SHEETS STA. TO STA.

F.A.P. RTE.	SECTION	COUNTY	TOTAL SHEETS	SHEET NO.
317	*	PEORIA/TAZEWELL	11	2
		CONTRACT NO. 68B46		
		ILLINOIS FED. AID PROJECT		

* (15B;[(102-1),(14HB)]BR)BR

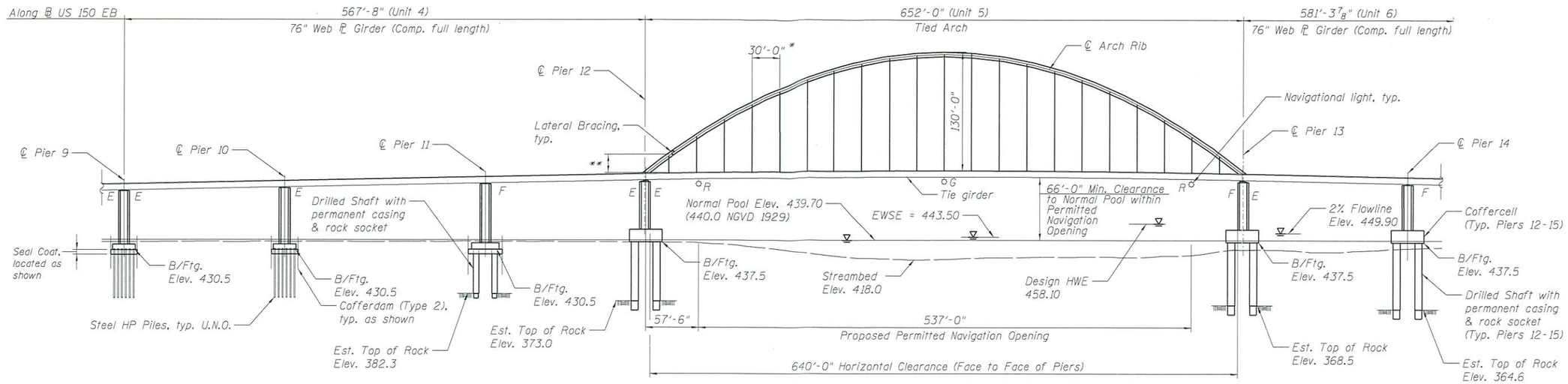

ELEVATION

* Hanger spacing, subject to refinement during design

** 17'-3" min. Vertical Clearance to lateral bracing from top of deck.

APPROVED

OCT 01 2018

AS A BASIS FOR PREPARATION OF DETAILED PLANS

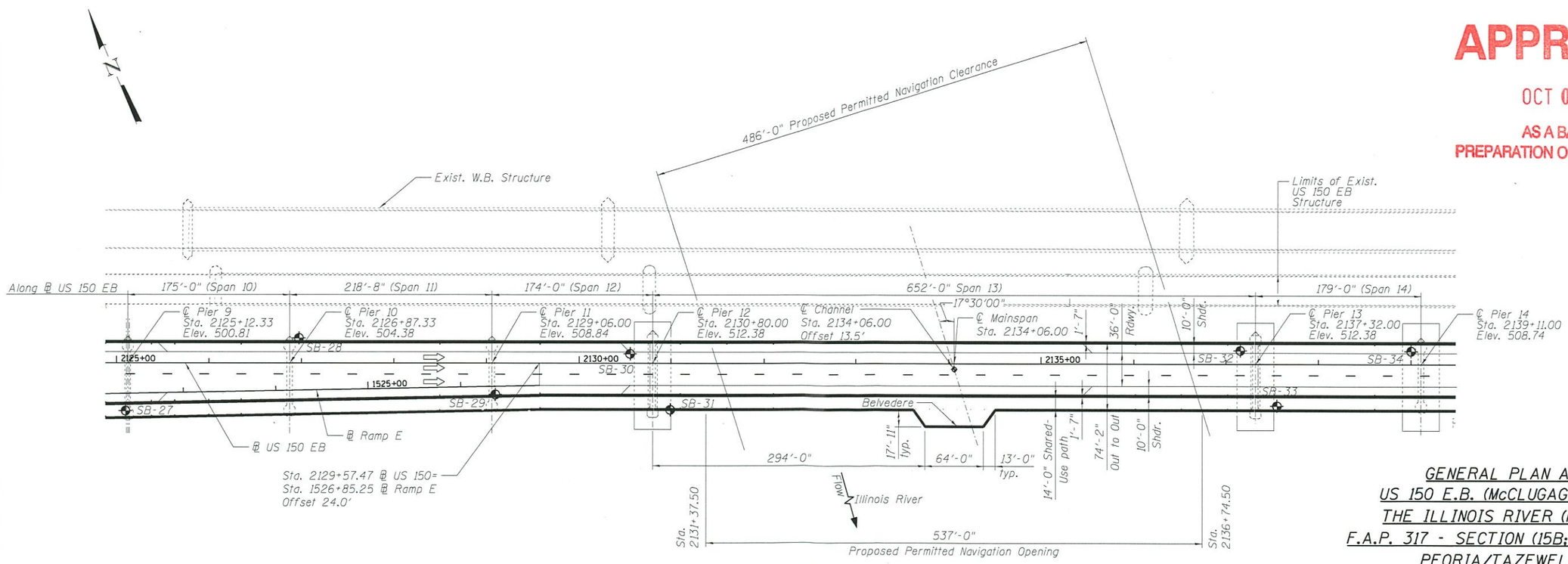

PLAN

GENERAL PLAN AND ELEVATION-2
US 150 E.B. (McCLUGAGE BRIDGE) OVER
THE ILLINOIS RIVER (PUBLIC WATERS)
F.A.P. 317 - SECTION (15B;[(102-1),(14HB)]BR)BR
PEORIA/TAZEWELL COUNTIES
STATION 2134+06.00
STRUCTURE NO. 090-0180

FILE NAME = 090-0180-IDOT-3-GP&E-2
Default

T·Y·LIN INTERNATIONAL	USER NAME = spantazis	DESIGNED - SP	REVISED -	STATE OF ILLINOIS DEPARTMENT OF TRANSPORTATION		F.A.P. RTE.	SECTION	COUNTY	TOTAL SHEETS	SHEET NO.
		DRAWN - SP	REVISED -			317	*	PEORIA/TAZEWELL	11	3
	PLOT SCALE = 119:11 15/16 ':' / in.	CHECKED - PDF	REVISED -			CONTRACT NO. 68B46				
	PLOT DATE = 8/31/2018	DATE - 8/31/18	REVISED -		SCALE: SHEET OF SHEETS STA. TO STA.	ILLINOIS FED. AID PROJECT				

* (15B;[(102-1),(14HB)]BR)BR

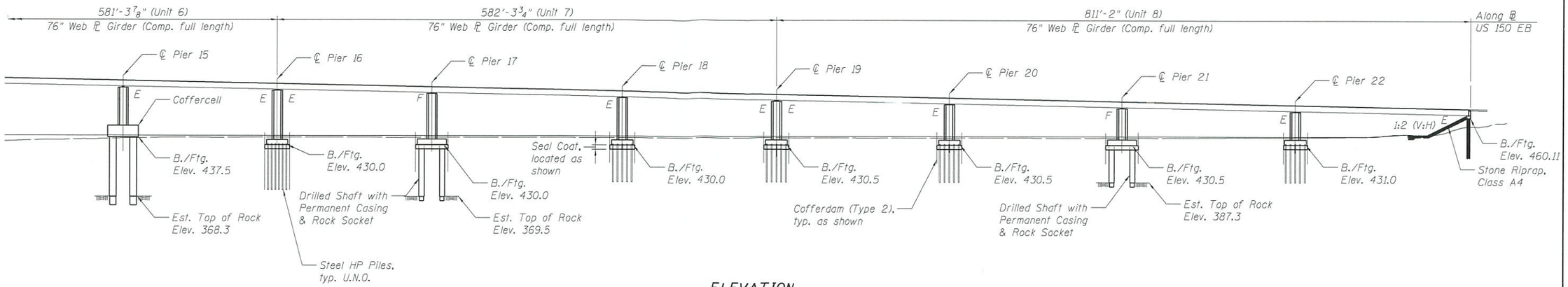

ELEVATION

APPROVED

OCT 01 2018

AS A BASIS FOR PREPARATION OF DETAILED PLANS

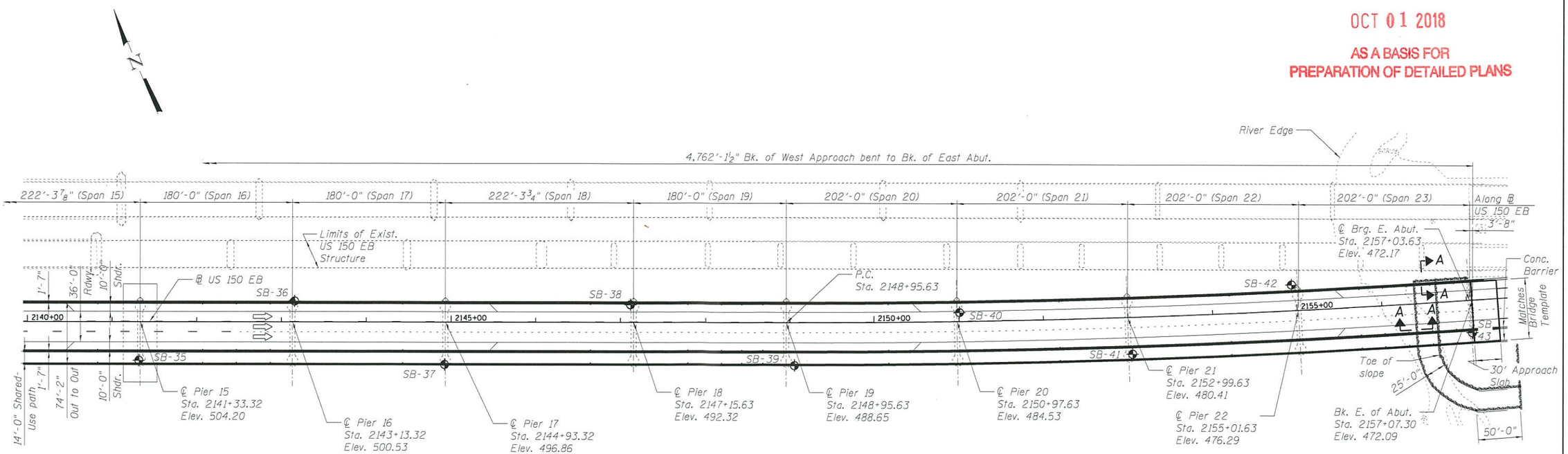

PLAN

Note:
For Sections A-A, see sheet 11 of 11.

GENERAL PLAN AND ELEVATION-3
US 150 E.B. (McCLUGAGE BRIDGE) OVER
THE ILLINOIS RIVER (PUBLIC WATERS)
F.A.P. 317 - SECTION (15B;[(102-1),(14HB)]BR)BR
PEORIA/TAZEWELL COUNTIES
STATION 2134+06.00
STRUCTURE NO. 090-0180

FILE NAME = 0090-0180-1DOT-4-GP&E-3
Default

TY·LIN INTERNATIONAL	USER NAME = spantazis	DESIGNED - SP	REVISED -
		DRAWN - SP	REVISED -
	PLOT SCALE = 119:11 15/16 ':' / in.	CHECKED - PDF	REVISED -
	PLOT DATE = 8/31/2018	DATE - 8/31/18	REVISED -

STATE OF ILLINOIS
DEPARTMENT OF TRANSPORTATION

SCALE: SHEET OF SHEETS STA. TO STA.

F.A.P. RTE.	SECTION	COUNTY	TOTAL SHEETS	SHEET NO.
317	*	PEORIA/TAZEWELL	11	4
CONTRACT NO. 68B46				
ILLINOIS	FED. AID PROJECT			

* (15B;[(102-1),(14HB)]BR)BR

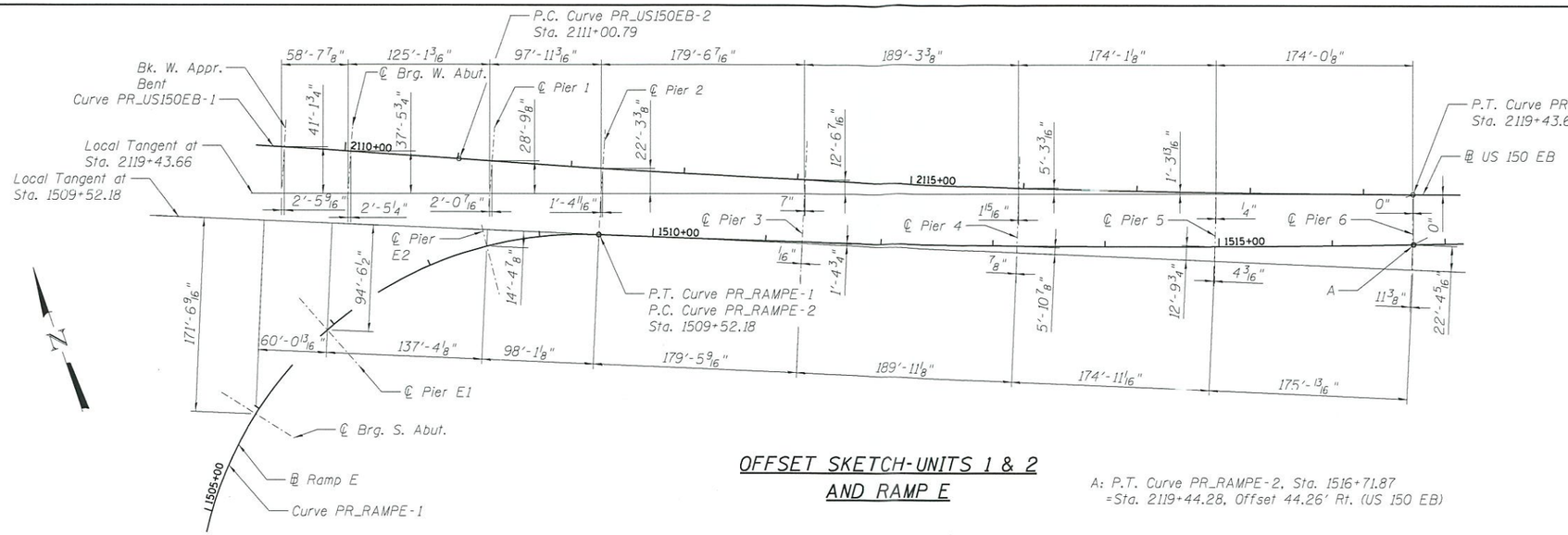

OFFSET SKETCH-UNITS 1 & 2 AND RAMP E

A: P.T. Curve PR_RAMPE-2, Sta. 1516+71.87
=Sta. 2119+44.28, Offset 44.26' Rt. (US 150 EB)

PROP. CURVE PR_RAMPE-1
PI STA. = 1507+59.96
Δ = 83° 48' 51" (RT)
D = 16° 51' 06"
R = 340.00'
T = 305.14'
L = 497.36'
E = 116.85'
e = 6.0%
T.R. = NONE
S.E. RUN = 103.0'
P.C. STA. = 1504+54.82
P.T. STA. - 1509+52.18

PROP. CURVE PR_RAMPE-2
PI STA. = 1513+12.14
Δ = 3° 34' 03" (LT)
D = 0° 29' 44"
R = 11,558.72'
T = 359.96'
L = 719.68'
E = 5.60'
e = N.C.
T.R. = N/A
S.E. RUN = N/A
P.C. STA. = 1509+52.18
P.T. STA. = 1516+71.87

PROP. CURVE PR_US150EB-1
PI STA. = 2106+79.54
Δ = 4° 11' 58" (RT)
D = 0° 29' 54"
R = 11,500.00'
T = 421.63'
L = 842.88'
E = 7.73'
e = N.C.
T.R. = N/A
S.E. RUN = N/A
P.C. STA. = 2102+57.91
P.T. STA. = 2111+00.79

PROP. CURVE PR_US150EB-2
PI STA. = 2115+22.41
Δ = 4° 11' 58" (LT)
D = 0° 29' 54"
R = 11,500.00'
T = 421.63'
L = 842.88'
E = 7.73'
e = N.C.
T.R. = N/A
S.E. RUN = N/A
P.C. STA. = 2111+00.79
P.T. STA. = 2119+43.66

PROP. CURVE PR_US150EB-3
PI STA. = 2153+74.88
Δ = 4° 46' 22" (LT)
D = 0° 29' 54"
R = 11,500.00'
T = 479.25'
L = 957.94'
E = 9.98'
e = N.C.
T.R. = N/A
S.E. RUN = N/A
P.C. STA. = 2148+95.63
P.T. STA. = 2158+53.58

PROP. CURVE PR_US150EB-4
PI STA. = 2163+32.83
Δ = 4° 46' 22" (RT)
D = 0° 29' 54"
R = 11,500.00'
T = 479.25'
L = 957.94'
E = 9.98'
e = N.C.
T.R. = N/A
S.E. RUN = N/A
P.C. STA. = 2158+53.58
P.T. STA. = 2168+11.52

PROFILE GRADE TAZEWELL AND PEORIA RR

(Top of Rail Westernmost Track)

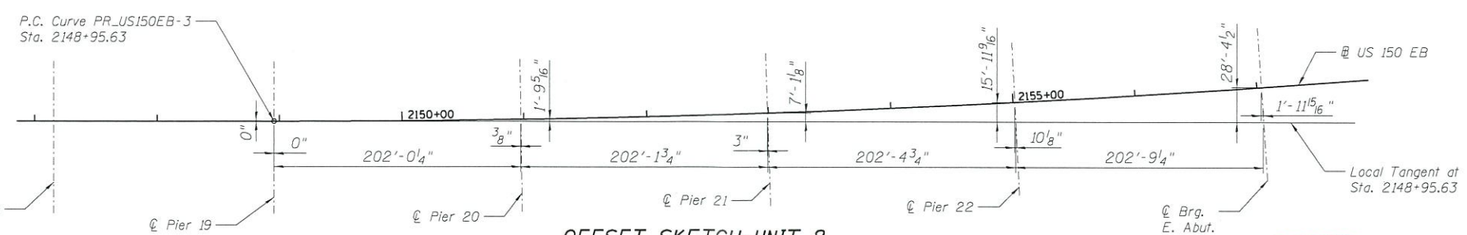

OFFSET SKETCH-UNIT 8

APPROVED
OCT 01 2018
AS A BASIS FOR PREPARATION OF DETAILED PLANS

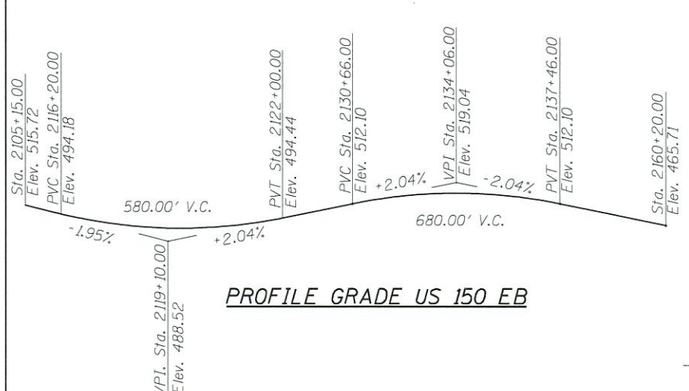

PROFILE GRADE US 150 EB

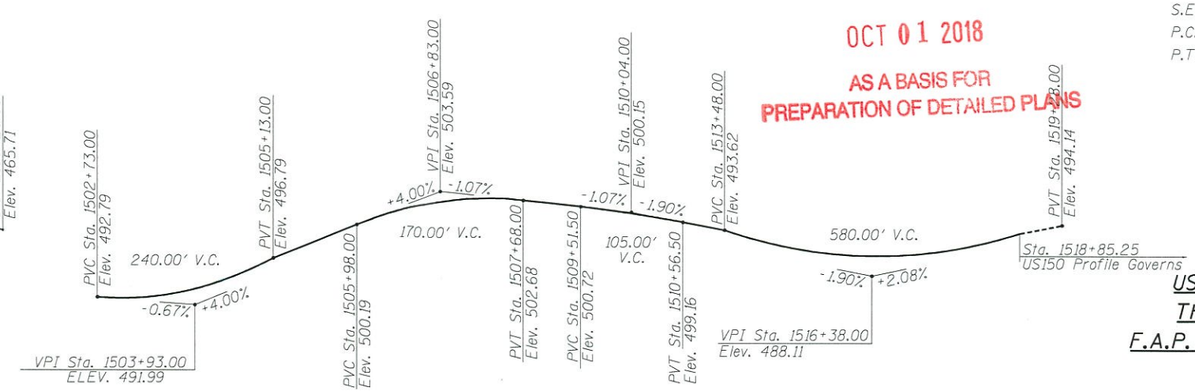

PROFILE GRADE RAMP E

GENERAL DATA

US 150 E.B. (McCLUGAGE BRIDGE) OVER
THE ILLINOIS RIVER (PUBLIC WATERS)
F.A.P. 317 - SECTION (15B;[(102-1),(14HB)]BR)BR
PEORIA/TAZEWELL COUNTIES
STATION 2134+06.00
STRUCTURE NO. 090-0180

FILE NAME = 090-0180-1DOT-5-data
Default

TY·LIN INTERNATIONAL

USER NAME = spantazis	DESIGNED - SP	REVISED -	
	DRAWN - SP	REVISED -	
PLOT SCALE = 119:11 15/16 ':1' / in.	CHECKED - PDF	REVISED -	
PLOT DATE = 8/31/2018	DATE - 8/31/18	REVISED -	

STATE OF ILLINOIS
DEPARTMENT OF TRANSPORTATION

SCALE: | SHEET OF SHEETS | STA. TO STA.

F.A.P. RTE.	SECTION	COUNTY	TOTAL SHEETS	SHEET NO.
317	*	PEORIA/TAZEWELL	11	5
		CONTRACT NO. 68B46		
		ILLINOIS FED. AID PROJECT		

* (15B;[(102-1),(14HB)]BR)BR

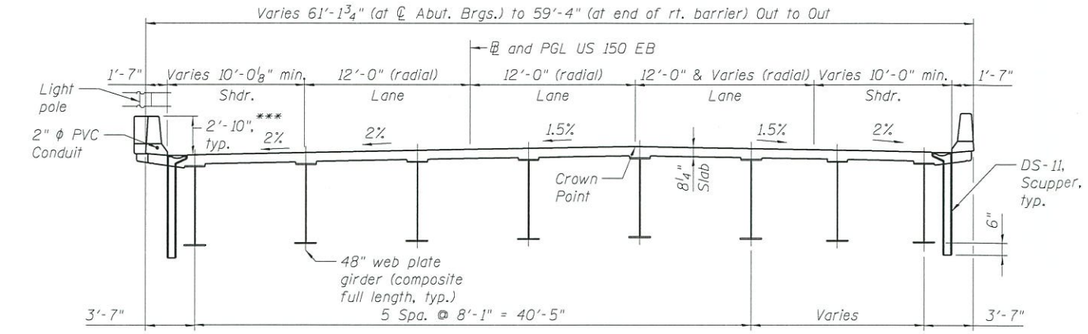

CROSS SECTION-UNIT 1

(Cross Section does not show the influence of Ramp E near end of Unit 1)

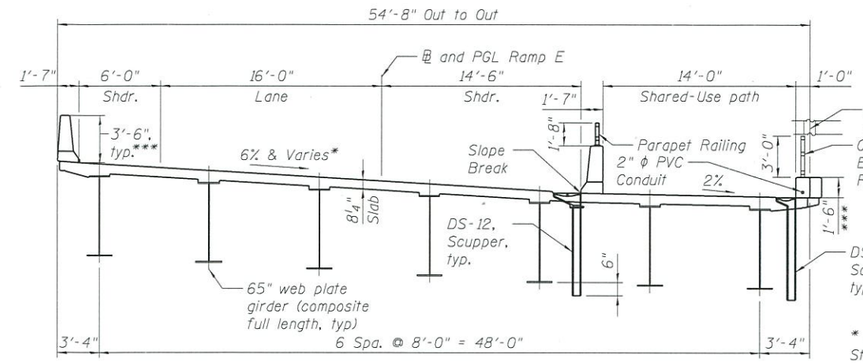

* Cross slope varies from 6% at Sta. 1509+00.68 to 2% at Sta. 1510+10.68

CROSS SECTION-RAMP E

(All dimensions are radial)
(Cross Section does not show the influence of Unit 1 near end of Ramp E Unit)

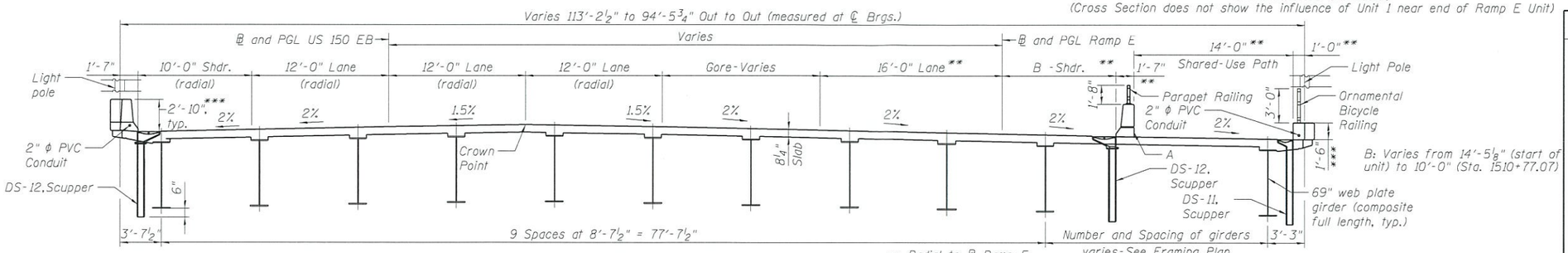

B: Varies from 14'-5⅛" (start of unit) to 10'-0" (Sta. 1510+77.07)

CROSS SECTION-UNIT 2

** Radial to ℄ Ramp E
*** After Grinding

A: Transition parapet height from 3'-6" on Ramp E to 2'-10" on US 150 EB.

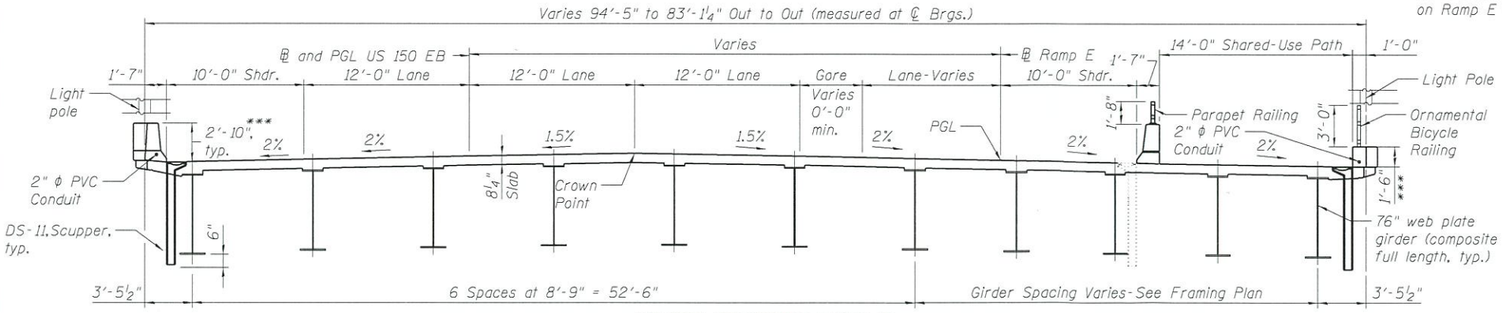

CROSS SECTION-UNIT 3

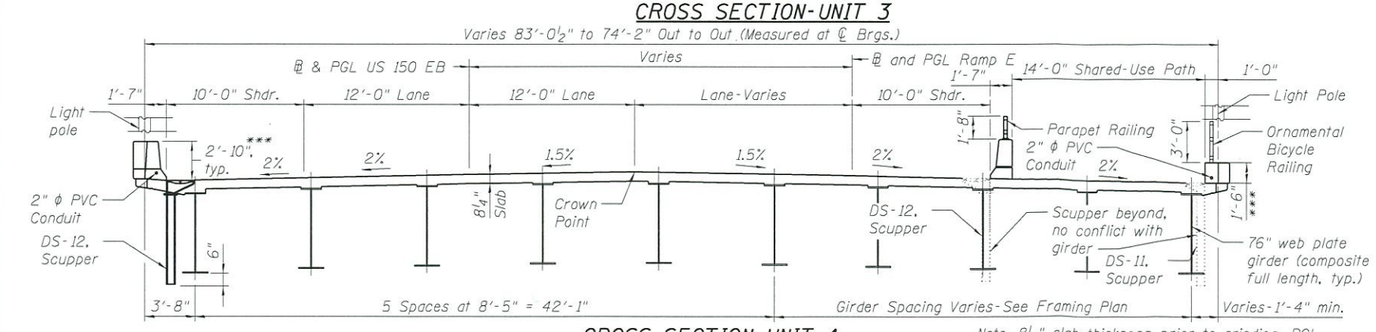

CROSS SECTION-UNIT 4

Note: 8¼" slab thickness prior to grinding. PGL Elevations are final elevations after grinding.

DRAINAGE LOCATIONS-US 150 EB

Drainage Type	Span	Station	Offset
DS-11	1	2110+97.00	22.11' Lt. & 35.01' Rt.
DS-11	1	2111+72.00	22.18' Lt & 34.81' Rt.
DS-11	2	2111+75.00	22.22' Lt. & 34.17' Rt
DS-11	2	2111+87.00	22.19' Lt. & 34.09' Rt.
DS-11	2	2112+00.00	22.15' Lt. & 34.01' Rt.
DS-12	3	2112+60.00	22' Lt.
DS-12	3	2113+06.00	68.59' Lt.
DS-12	3	2113+53.00	22' Lt.
DS-12	4	2114+70.00	22' Lt.
DS-12	4	2114+85.00	63.47' Rt.
DS-12	4	2115+15.00	62.87' Rt.
DS-12	4	2115+45.00	22' Lt. & 62.27' Rt.
DS-12	5	2116+47.00	22' Lt. & 60.22' Rt.
DS-12	5	2116+57.00	60.02' Rt.
DS-12	5	2117+08.00	22' Lt.
DS-12	6	2118+22.00	22' Lt. & 56.72' Rt.
DS-12	6	2118+45.00	22' Lt. & 56.25' Rt.
DS-12	6	2118+60.00	22' Lt. & 55.95' Rt.
DS-12	6	2118+68.00	22' Lt. & 55.79' Rt.
DS-12	6	2118+85.00	22' Lt. & 55.45' Rt.
DS-12	6	2119+01.00	22' Lt. & 55.13' Rt.
DS-12	6	2119+11.00	22' Lt. & 54.93' Rt.
DS-12	6	2119+21.00	22' Lt. & 54.73' Rt.
DS-11	7	2119+63.00	22' Lt. & 53.89' Rt.
DS-11	7	2119+89.00	22' Lt. & 53.37' Rt.
DS-11	7	2120+15.00	22' Lt. & 52.85' Rt.
DS-11	7	2120+41.00	22' Lt. & 52.33' Rt.
DS-11	7	2120+67.00	22' Lt. & 51.81' Rt.
DS-11	8	2121+75.00	22' Lt. & 49.65' Rt.
DS-11	8	2122+12.00	22' Lt. & 48.91' Rt.
DS-11	8	2122+47.00	22' Lt. & 48.21' Rt.
DS-11	8	2122+82.00	22' Lt. & 47.51' Rt.
DS-11	9	2123+90.00	22' Lt. & 45.35' Rt.
DS-11	9	2124+38.00	22' Lt. & 44.39' Rt.
DS-11	9	2124+88.00	22' Lt. & 43.39' Rt.
DS-12	10	2125+38.00	22' Lt. & 42.39' Rt.
DS-12	10	2125+63.00	22' Lt. & 41.89' Rt.
DS-12	10	2126+00.00	41.15' Rt.
DS-12	10	2126+35.00	22' Lt. & 40.45' Rt.
DS-12	11	2127+43.00	22' Lt.
DS-12	11	2128+50.00	22' Lt. & 36.15' Rt.
DS-12	12	2129+58.00	22' Lt. & 34.00' Rt.
DS-11	13	2131+10.00	22' Lt. & 34' Rt.
DS-11	13	2131+60.00	22' Lt. & 34' Rt.
DS-11	13	2132+10.00	22' Lt. & 34' Rt.
Floordrains	13	2133+19.00 to 2134+99.00	22' Lt. & 34' Rt.

DRAINAGE LOCATIONS-US 150 EB

Drainage Type	Span	Station	Offset
DS-11	13	2136+02.00	22' Lt. & 34' Rt.
DS-11	13	2136+52.00	22' Lt. & 34' Rt.
DS-11	13	2137+02.00	22' Lt. & 34' Rt.
DS-11	14	2138+61.00	22' Lt. & 34' Rt.
DS-11	15	2140+83.00	22' Lt. & 34' Rt.
DS-11	16	2142+07.00	22' Lt. & 34' Rt.
DS-11	16	2142+47.00	22' Lt. & 34' Rt.
DS-11	16	2142+87.00	22' Lt. & 34' Rt.
DS-11	17	2144+43.00	22' Lt. & 34' Rt.
DS-11	18	2146+65.00	22' Lt. & 34' Rt.
DS-11	19	2147+79.00	22' Lt. & 34' Rt.
DS-11	19	2148+19.00	22' Lt. & 34' Rt.
DS-11	19	2148+44.00	22' Lt. & 34' Rt.
DS-11	19	2148+69.00	22' Lt. & 34' Rt.
DS-11	20	2150+17.00	22' Lt. & 34' Rt.
DS-11	21	2152+19.00	22' Lt. & 34' Rt.
DS-11	22	2154+21.00	22' Lt. & 34' Rt.
DS-11	23	2155+74.00	22' Lt. & 34' Rt.
DS-11	23	2156+02.00	22' Lt. & 34' Rt.
DS-11	23	2156+30.00	22' Lt. & 34' Rt.
DS-11	23	2156+58.00	22' Lt. & 34' Rt.
DS-11	23	2156+88.00	22' Lt. & 34' Rt.

Provide DS-11 scuppers along shared-use path matching locations of scuppers placed along adjacent traffic barrier.

DRAINAGE LOCATIONS-RAMP E

Drainage Type	Span	Station	Offset
DS-12	1	1506+10.00	14.50' Rt.
DS-12	3	1508+32.00	14.50' Rt.
DS-12	3	1509+02.00	14.50' Rt.
DS-12	3	1509+22.00	14.50' Rt.

APPROVED
OCT 01 2018
AS A BASIS FOR PREPARATION OF DETAILED PLANS

CROSS SECTIONS-1
US 150 E.B. (McCLUGAGE BRIDGE) OVER THE ILLINOIS RIVER (PUBLIC WATERS)
F.A.P. 317 - SECTION (15B;[(102-1),(14HB)]BR)BR
PEORIA/TAZEWELL COUNTIES
STATION 2134+06.00
STRUCTURE NO. 090-0180

FILE NAME = 090-0180-IDOT-6-CrossSection1
Default

TY·LIN INTERNATIONAL	USER NAME = spantazis	DESIGNED - SP	REVISED -	STATE OF ILLINOIS DEPARTMENT OF TRANSPORTATION
		DRAWN - SP	REVISED -	
	PLOT SCALE = 10:8 ':' / in.	CHECKED - PDF	REVISED -	
	PLOT DATE = 8/31/2018	DATE - 8/31/18	REVISED -	

SCALE: SHEET OF SHEETS STA. TO STA.

F.A.P. RTE.	SECTION	COUNTY	TOTAL SHEETS	SHEET NO.
317	*	PEORIA/TAZEWELL	11	6
		CONTRACT NO. 68B46		
		ILLINOIS FED. AID PROJECT		

* (15B;[(102-1),(14HB)]BR)BR

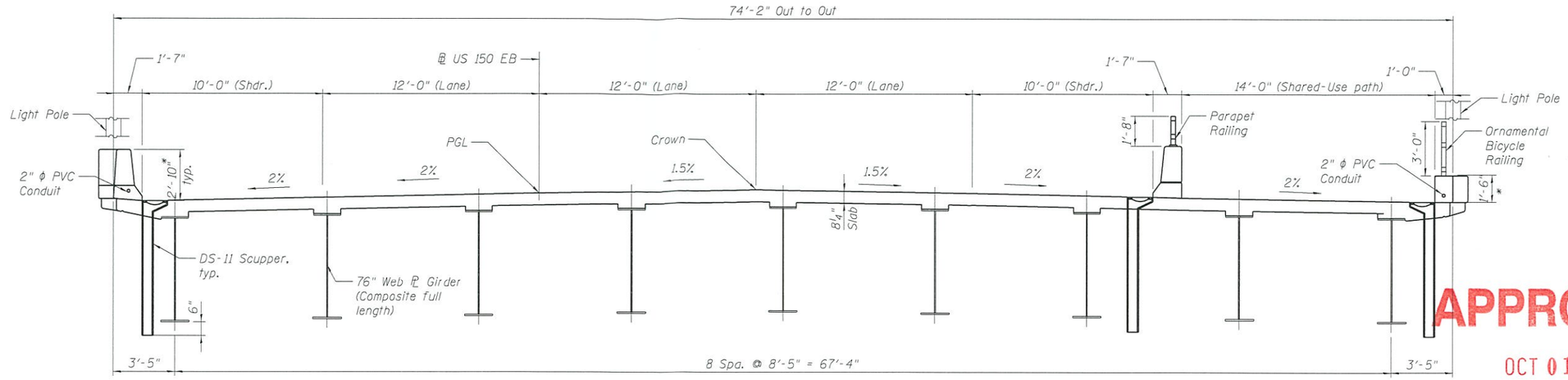

CROSS SECTION UNITS 6-8

(In Unit 8, roadway and girders are radial)

APPROVED

OCT 01 2018

AS A BASIS FOR PREPARATION OF DETAILED PLANS

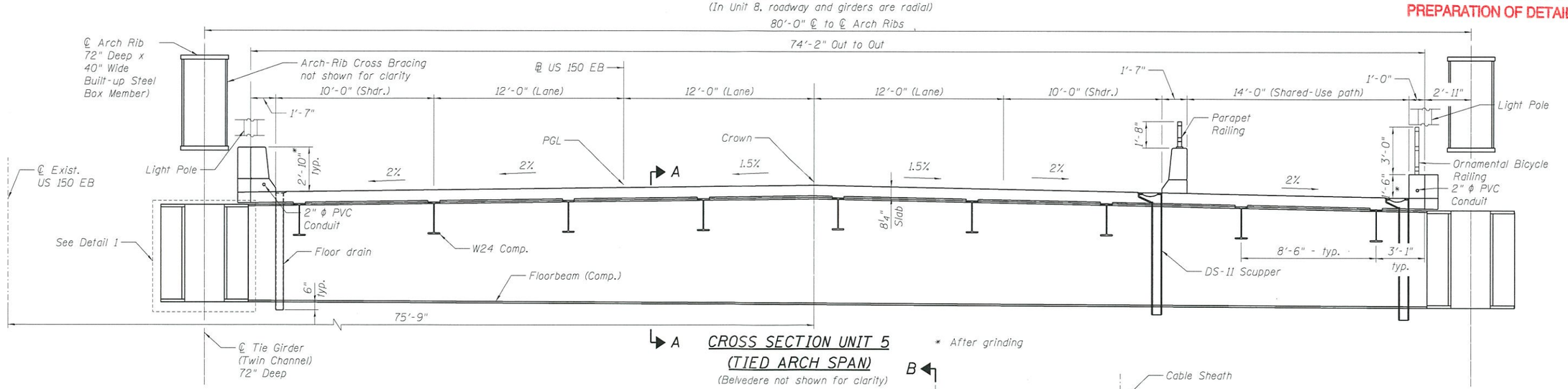

CROSS SECTION UNIT 5
(TIED ARCH SPAN)

(Belvedere not shown for clarity)

* After grinding

Note:
Slab thickness shown is prior to grinding. PGL elevations are final elevations after grinding.

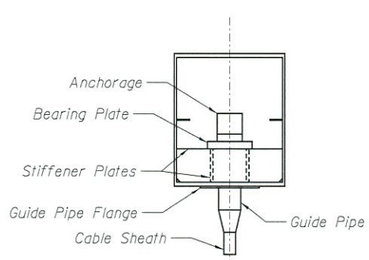

HANGER TO ARCH RIB CONNECTION

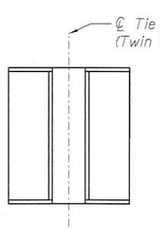

DETAIL 1

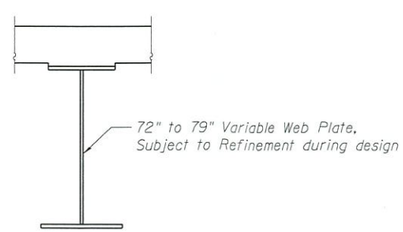

SECTION A-A

(Steel Plate Girder member-Composite)

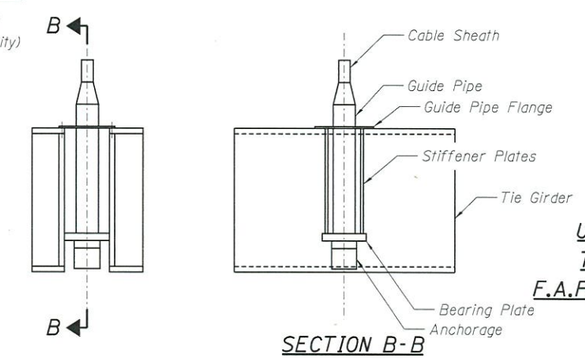

SECTION B-B

HANGER TO TIE GIRDER CONNECTION

CROSS SECTIONS-2
US 150 E.B. (McCLUGAGE BRIDGE) OVER THE ILLINOIS RIVER (PUBLIC WATERS)
F.A.P. 317 - SECTION (15B;[(102-1),(14HB)]BR)BR
PEORIA/TAZEWELL COUNTIES
STATION 2134+06.00
STRUCTURE NO. 090-0180

FILE NAME = 090-0188-IDOT-7-CrossSection2
Default

TYLIN INTERNATIONAL	USER NAME = spantazis	DESIGNED - SP	REVISED -	STATE OF ILLINOIS DEPARTMENT OF TRANSPORTATION		F.A.P. RTE.	SECTION	COUNTY	TOTAL SHEETS	SHEET NO.
		DRAWN - SP	REVISED -			317	*	PEORIA/TAZEWELL	11	7
	PLOT SCALE = 0.1667 ' / in.	CHECKED - PDF	REVISED -					CONTRACT NO. 68B46		
	PLOT DATE = 8/31/2018	DATE - 8/31/18	REVISED -		SCALE: SHEET OF SHEETS STA. TO STA.			ILLINOIS FED. AID PROJECT		

* (15B;[(102-1),(14HB)]BR)BR

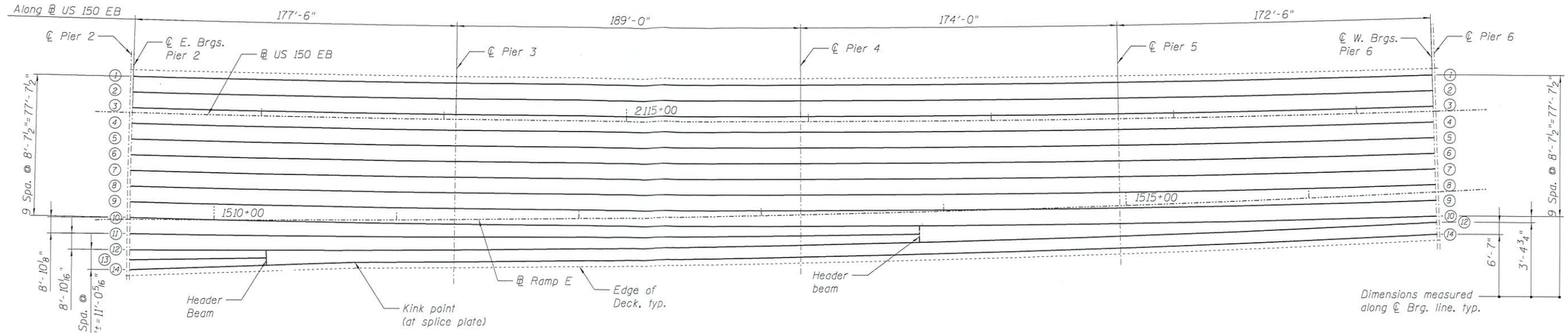

FRAMING PLAN - UNIT 2

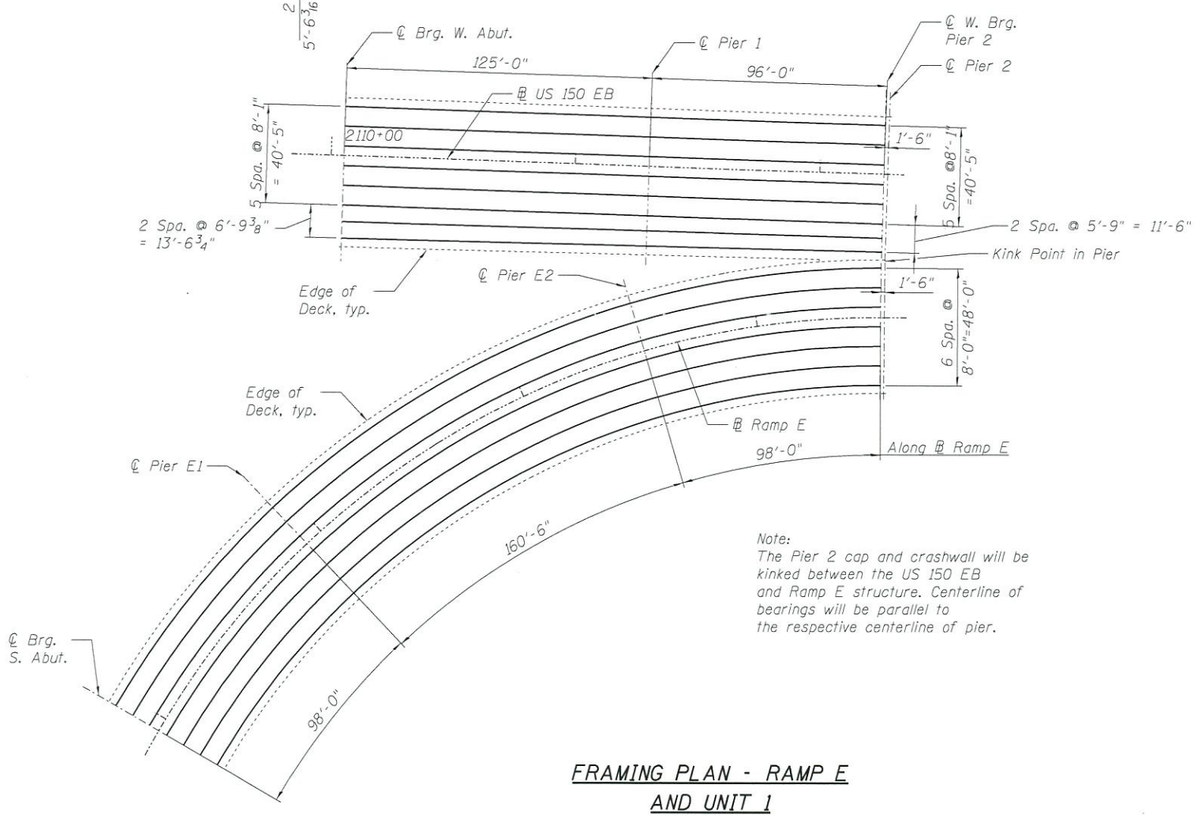

Note:
The Pier 2 cap and crashwall will be kinked between the US 150 EB and Ramp E structure. Centerline of bearings will be parallel to the respective centerline of pier.

FRAMING PLAN - RAMP E AND UNIT 1

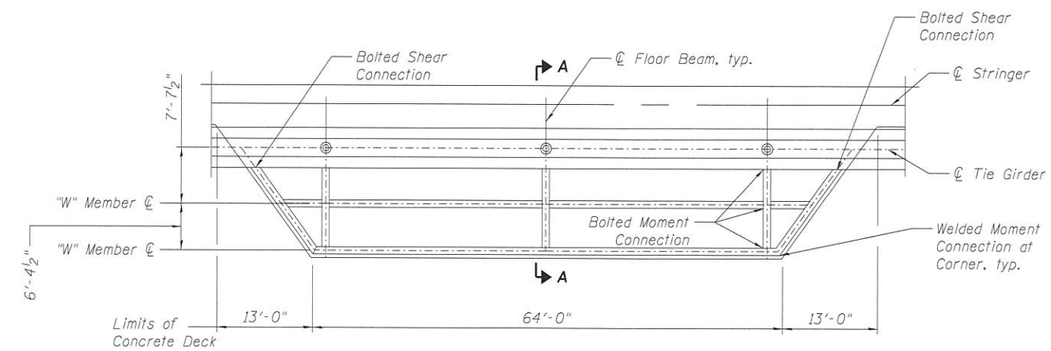

PARTIAL UNIT 5 FRAMING PLAN - BELVEDERE

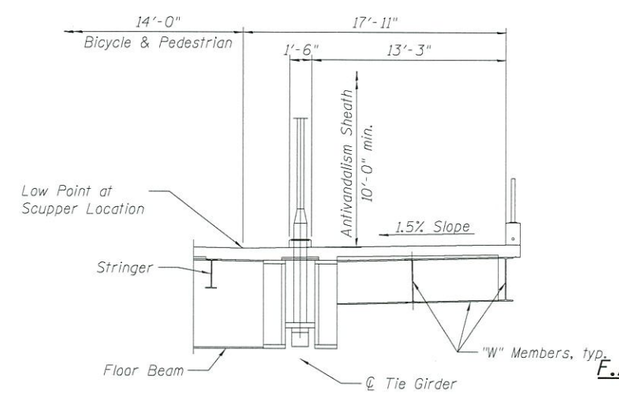

VIEW A-A PARTIAL SECTION

APPROVED

OCT 01 2018

AS A BASIS FOR PREPARATION OF DETAILED PLANS

FRAMING PLAN-1
US 150 E.B. (McCLUGAGE BRIDGE) OVER
THE ILLINOIS RIVER (PUBLIC WATERS)
F.A.P. 317 - SECTION (15B;[(102-1),(14HB)]BR)BR
PEORIA/TAZEWELL COUNTIES
STATION 2134+06.00
STRUCTURE NO. 090-0180

FILE NAME = 090-0180-IDOT-B-Framing1
Default

TYLIN INTERNATIONAL	USER NAME = spantazis	DESIGNED - SP	REVISED -
		DRAWN - SP	REVISED -
	PLOT SCALE = 60:0 ':' / in.	CHECKED - PDF	REVISED -
	PLOT DATE = 8/31/2018	DATE - 8/31/18	REVISED -

STATE OF ILLINOIS
DEPARTMENT OF TRANSPORTATION

SCALE: | SHEET OF SHEETS | STA. TO STA.

F.A.P. RTE.	SECTION	COUNTY	TOTAL SHEETS	SHEET NO.
317	*	PEORIA/TAZEWELL	11	8
		CONTRACT NO. 68B46		
		ILLINOIS FED. AID PROJECT		

* (15B;[(102-1),(14HB)]BR)BR

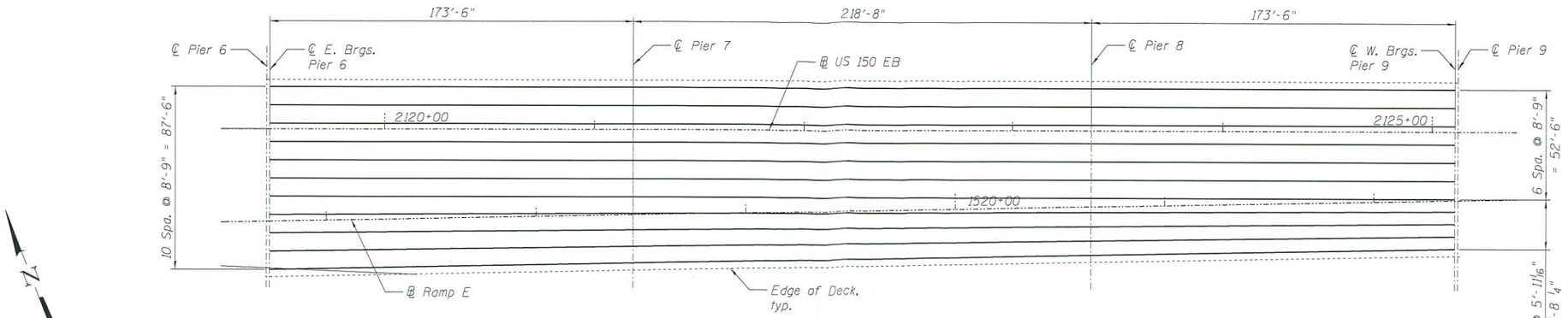

FRAMING PLAN - UNIT 3

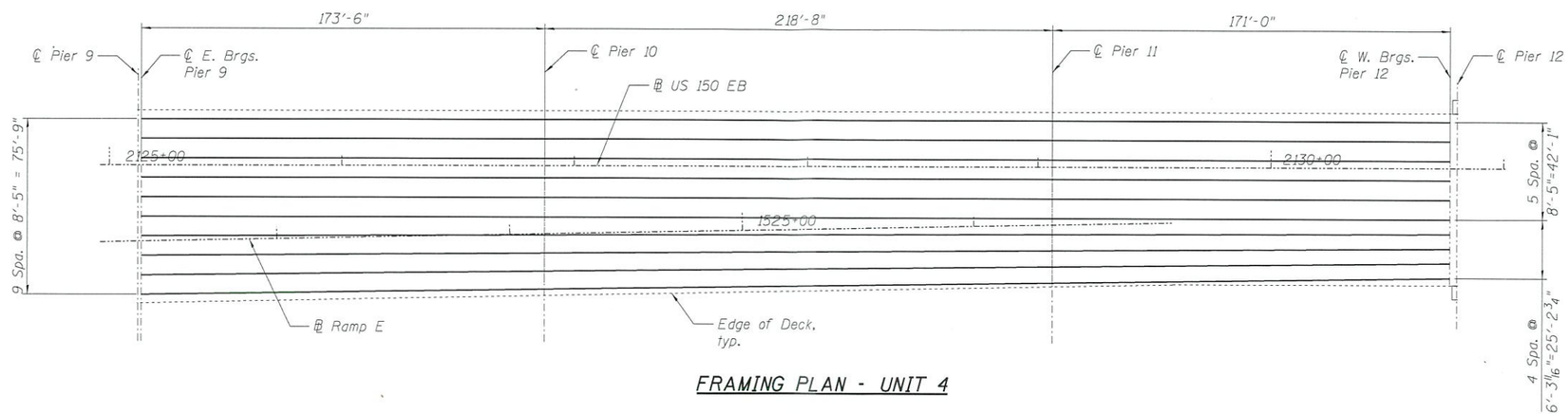

FRAMING PLAN - UNIT 4

APPROVED

OCT 01 2018

AS A BASIS FOR PREPARATION OF DETAILED PLANS

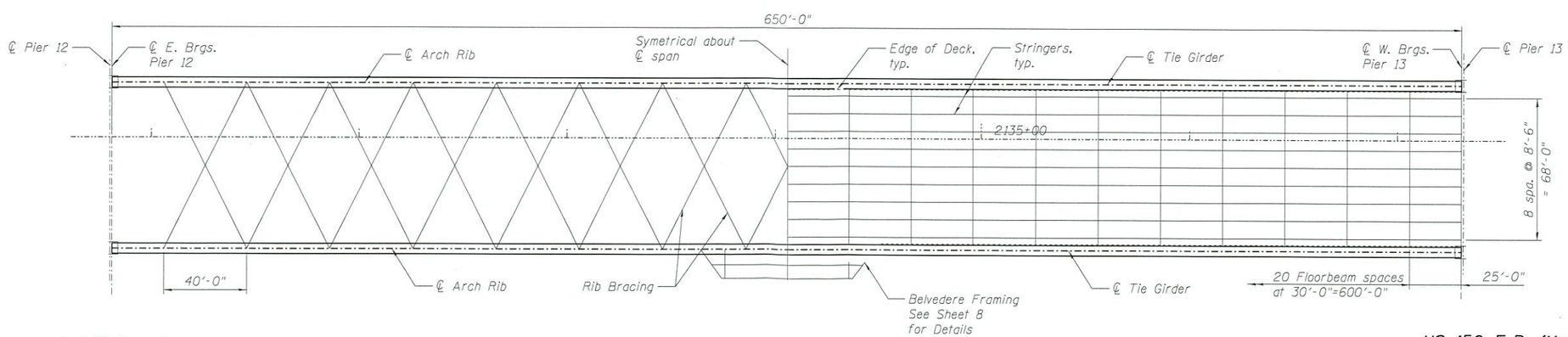

Arch Rib Brace Spacing Subject to refinement during design

FRAMING PLAN - UNIT 5

Showing Tie Girder & Deck System Framing

FRAMING PLAN-2
US 150 E.B. (McCLUGAGE BRIDGE) OVER
THE ILLINOIS RIVER (PUBLIC WATERS)
F.A.P. 317 - SECTION (15B;[(102-1),(14HB)]BR)BR
PEORIA/TAZEWELL COUNTIES
STATION 2134+06.00
STRUCTURE NO. 090-0180

FILE NAME = 090-0180-IDOT-9-Framing2
Default

TYLIN INTERNATIONAL	USER NAME = spantazis	DESIGNED - SP	REVISED -	STATE OF ILLINOIS DEPARTMENT OF TRANSPORTATION		F.A.P. RTE.	SECTION	COUNTY	TOTAL SHEETS	SHEET NO.
		DRAWN - SP	REVISED -			317	*	PEORIA/TAZEWELL	11	9
	PLOT SCALE = 60.0 ' / in.	CHECKED - PDF	REVISED -					CONTRACT NO. 68B46		
	PLOT DATE = 8/31/2018	DATE - 8/31/18	REVISED -		SCALE: SHEET OF SHEETS STA. TO STA.		ILLINOIS	FED. AID PROJECT		

* (15B;[(102-1),(14HB)]BR)BR

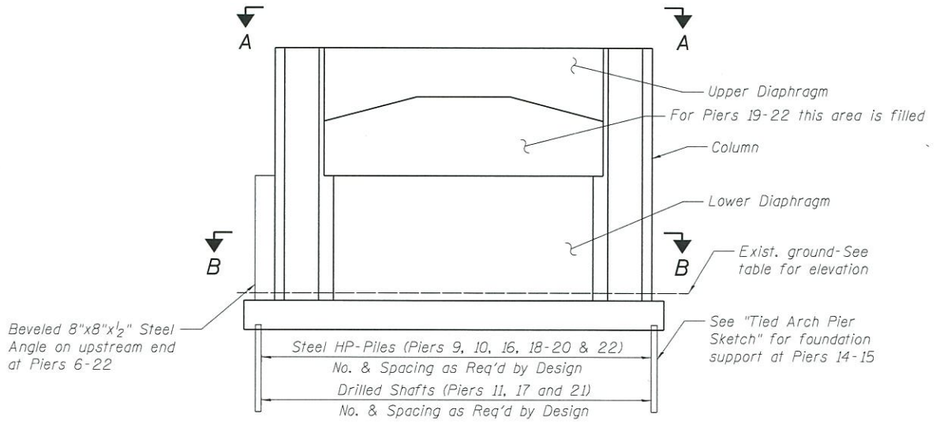

PIER SKETCH AT PIERS 9-11 & 14-22

Seal Coat not Shown
(Looking East)

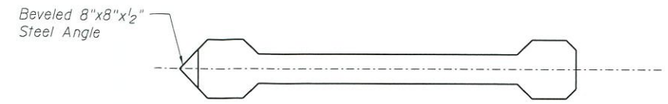

SECTION B-B

VIEW A-A PLAN

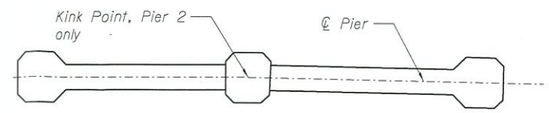

VIEW D-D PLAN

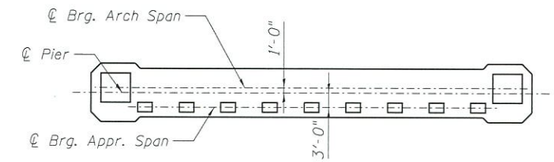

VIEW C-C PLAN

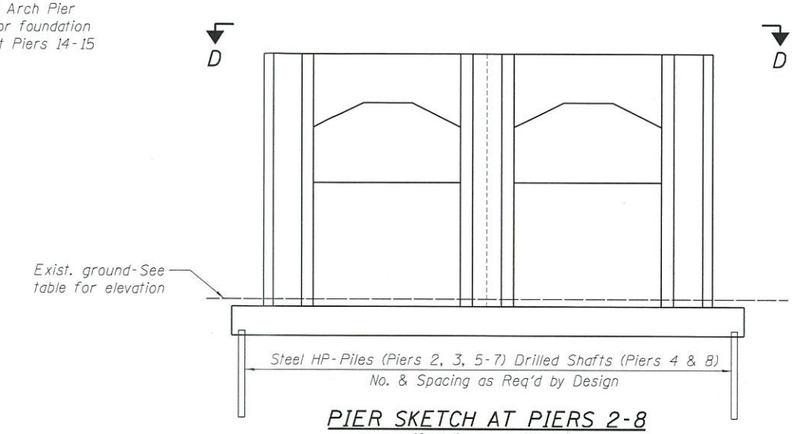

PIER SKETCH AT PIERS 2-8

(Seal Coat not Shown)
(Looking East)

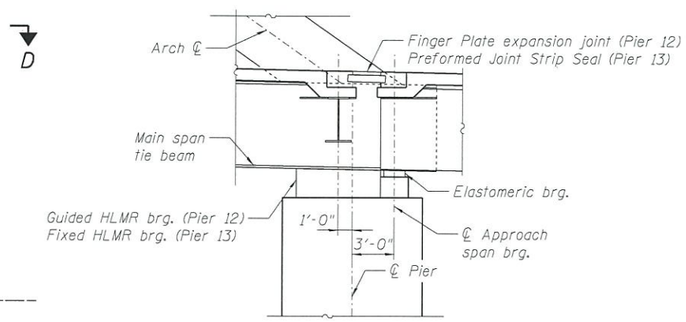

SECTION AT ARCH PIERS 12 AND 13

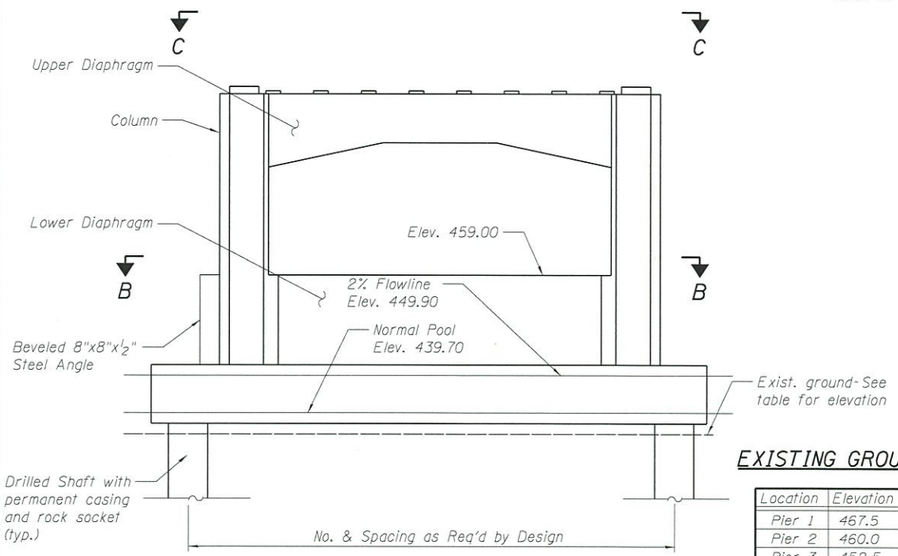

TIED ARCH PIER SKETCH

(Piers 12 and 13)
(Looking East)

EXISTING GROUND ELEVATIONS

Location	Elevation	Location	Elevation
Pier 1	467.5	Pier 12	436.0
Pier 2	460.0	Pier 13	427.5
Pier 3	452.5	Pier 14	429.0
Pier 4	445.5	Pier 15	436.0
Pier 5	442.5	Pier 16	437.0
Pier 6	438.0	Pier 17	437.0
Pier 7	437.0	Pier 18	437.0
Pier 8	437.0	Pier 19	437.0
Pier 9	437.5	Pier 20	437.5
Pier 10	437.5	Pier 21	437.5
Pier 11	437.5	Pier 22	438.0

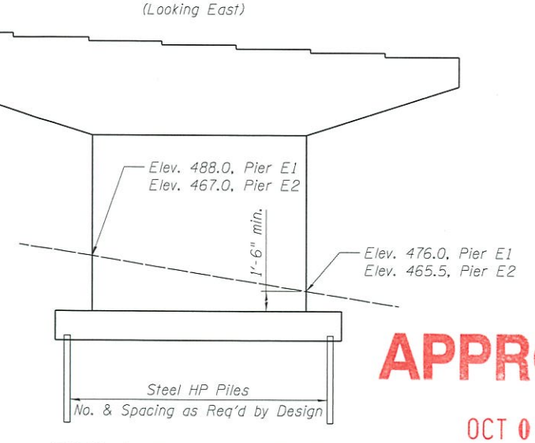

PIER SKETCH - PIERS E1 E2 AND PIER 1

(Looking Northeast)
(Piers E1 and E2 shown, Pier 1 similar)

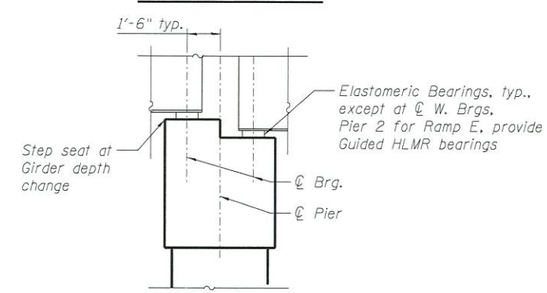

SECTION AT EXPANSION PIERS 2,6,9,16,19

(Use finger plate expansion joints, except at Pier 2 where a swivel type modular expansion joint shall be provided)

APPROVED

OCT 01 2018

AS A BASIS FOR PREPARATION OF DETAILED PLANS

PIER SKETCH
US 150 E.B. (McCLUGAGE BRIDGE) OVER THE ILLINOIS RIVER (PUBLIC WATERS)
F.A.P. 317 - SECTION (15B;[(102-1),(14HB)]BR)BR
PEORIA/TAZEWELL COUNTIES
STATION 2134+06.00
STRUCTURE NO. 090-0180

FILE NAME = 090-0180-IDOT-10-PierSketch.dgn
Default

T·Y·LIN INTERNATIONAL

USER NAME = spantazis	DESIGNED - SP	REVISED -	
	DRAWN - SP	REVISED -	
PLOT SCALE = 0.1667 ' / in.	CHECKED - PDF	REVISED -	
PLOT DATE = 8/31/2018	DATE - 8/31/18	REVISED -	

STATE OF ILLINOIS
DEPARTMENT OF TRANSPORTATION

SCALE: | SHEET OF SHEETS | STA. TO STA.

F.A.P. RTE.	SECTION	COUNTY	TOTAL SHEETS	SHEET NO.
317	*	PEORIA/TAZEWELL	11	10
		CONTRACT NO. 68B46		
		ILLINOIS FED. AID PROJECT		

* (15B;[(102-1),(14HB)]BR)BR

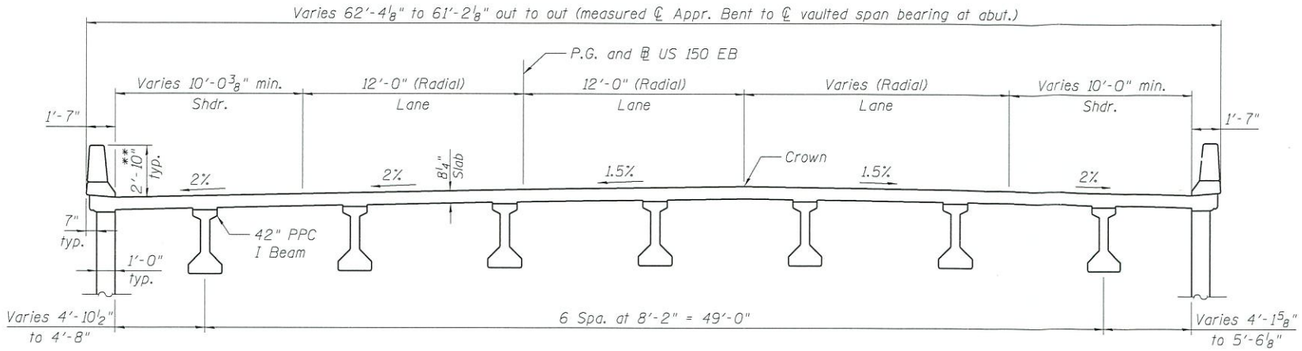

CROSS SECTION THRU VAULTED SPAN

(Looking East)

** After grinding

Note:
8 1/4" slab thickness is prior to grinding.
P.G.L. elevations are after grinding.

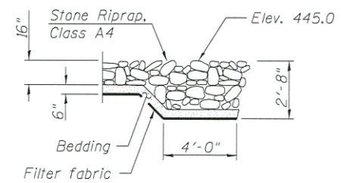

SECTION A-A

(East Abutment only)

APPROVED

OCT 01 2018

AS A BASIS FOR PREPARATION OF DETAILED PLANS

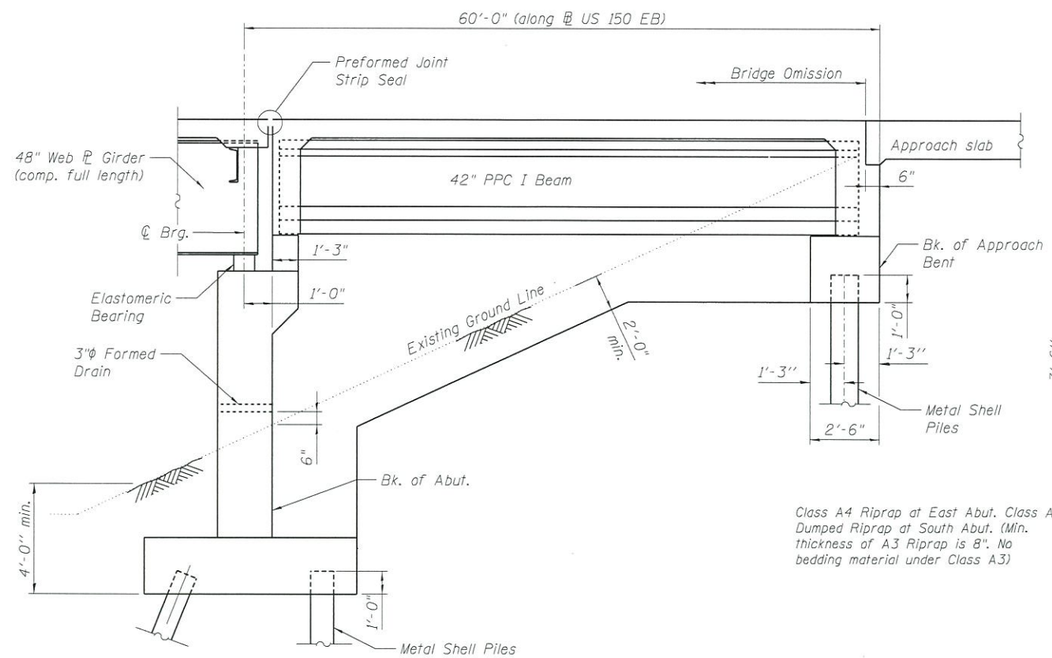

SECTION THRU VAULTED WEST ABUTMENT

(Looking South)

Note:
Access door not shown on vaulted abutment curtainwall. Provide access door at each curtainwall. Install exhaust fan.

*** Swivel type modular expansion joint (S. Abut.)
Finger plate expansion joint (E. Abut.)

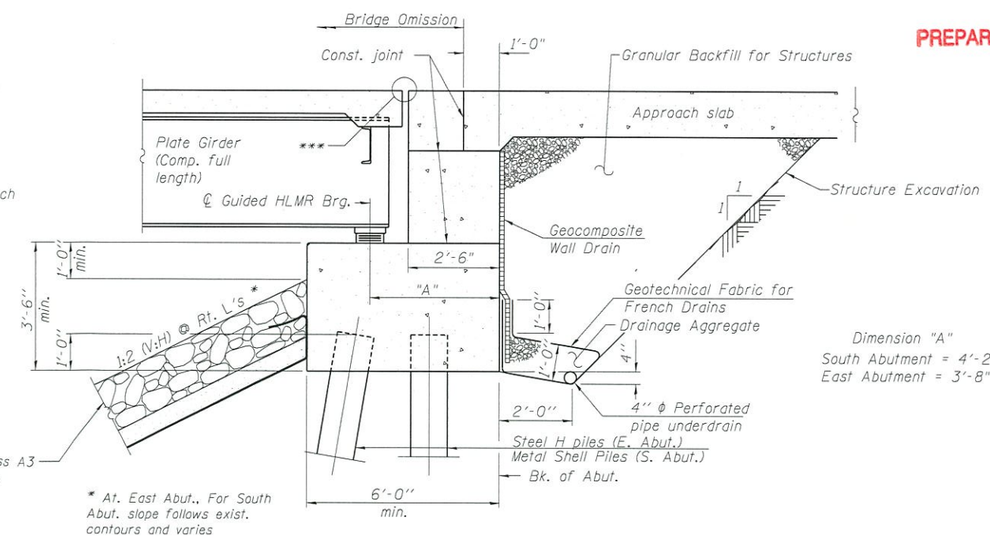

Dimension "A"
South Abutment = 4'-2 3/4"
East Abutment = 3'-8"

SECTION THRU STUB ABUTMENTS
SOUTH ABUTMENT-LOOKING SOUTHEAST
EAST ABUTMENT-LOOKING NORTH

ABUTMENTS AND VAULTED SPAN
US 150 E.B. (McCLUGAGE BRIDGE) OVER
THE ILLINOIS RIVER (PUBLIC WATERS)
F.A.P. 317 - SECTION (15B;[(102-1),(14HB)]BR)BR
PEORIA/TAZEWELL COUNTIES
STATION 2134+06.00
STRUCTURE NO. 090-0180

FILE NAME = 090-0180-IDOT-11-abutments
Default

TYLIN INTERNATIONAL	USER NAME = spantazis	DESIGNED - SP	REVISED -
		DRAWN - SP	REVISED -
	PLOT SCALE = 8:0 ':' / in.	CHECKED - PDF	REVISED -
	PLOT DATE = 8/31/2018	DATE - 8/31/18	REVISED -

STATE OF ILLINOIS
DEPARTMENT OF TRANSPORTATION

SCALE: | SHEET OF SHEETS | STA. TO STA.

F.A.P. RTE.	SECTION	COUNTY	TOTAL SHEETS	SHEET NO.
317	*	PEORIA/TAZEWELL	11	11
CONTRACT NO. 68B46				
ILLINOIS FED. AID PROJECT				

* (15B;[(102-1),(14HB)]BR)BR