BENCHMARK: 0910005 - Aluminum disk, IDOT BM, set in top of NW Parapet wall of SN 091-0005, Sta. 2894+90, 18' RT. of ℄ NB Lanes of I-57. Elev. 412.49

EXISTING STRUCTURES:
SN 091-0005 and SN 091-0006 were originally constructed in 1958 as F.A.I. 57, Section 91-3B-1. The three-span structures consist of concrete decks supported by five haunched concrete T-beams. The concrete spans are supported by concrete wall piers and open abutments. The abutments are supported by steel piles and the piers are supported on spread footings. Back to back abutments is 195'-0" NB Lanes and 167'-3" SB Lanes. The superstructure width is 34'-0" between parapets. The skew is 45° NB Lanes and 43°-53'-00" SB Lanes. Interstate traffic will be maintained utilizing crossovers.

No salvage.

Up to ¼" may be ground off the bridge deck, the bridge approach slabs, and the pavement connectors.

The existing piers and abutment piles shall be removed to one foot below the proposed bottom of riprap bedding. Below this level these items shall remain in place to improve slope stability.

APPROVED
APR 12 2019
AS A BASIS FOR PREPARATION OF DETAILED PLANS

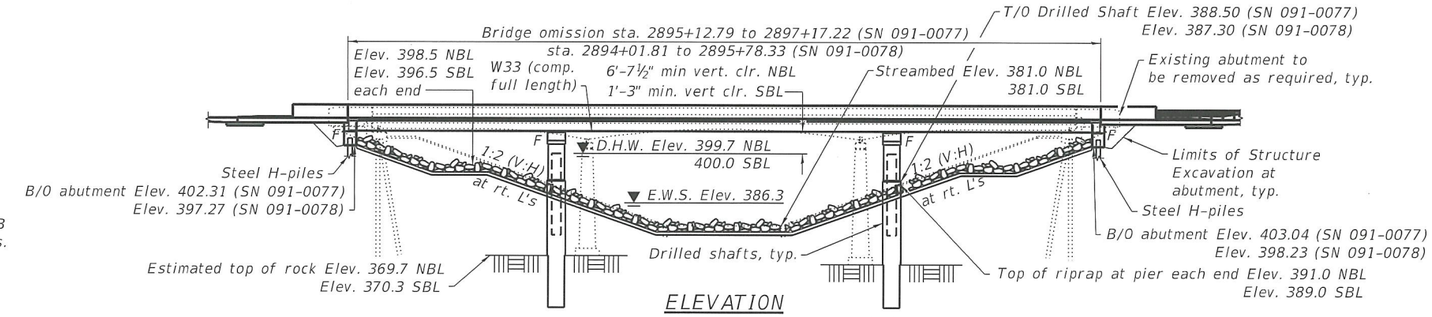

ELEVATION
(Showing SN 091-0077, SN 091-0078 similar)

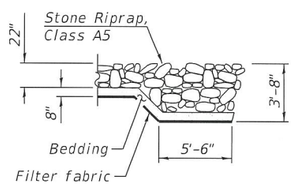

SECTION A-A

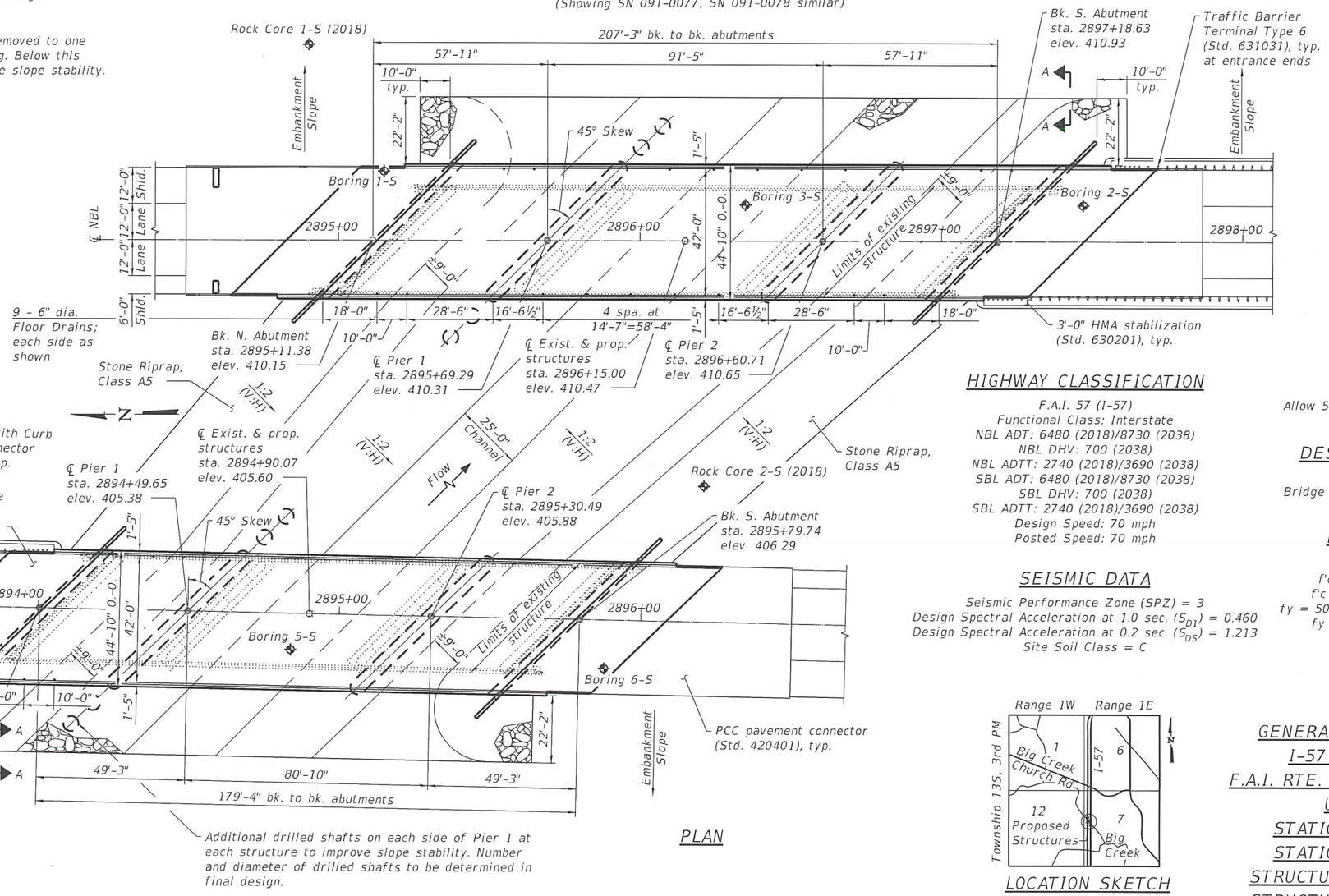

PLAN

HIGHWAY CLASSIFICATION

F.A.I. 57 (I-57)
Functional Class: Interstate
NBL ADT: 6480 (2018)/8730 (2038)
NBL DHV: 700 (2038)
NBL ADTT: 2740 (2018)/3690 (2038)
SBL ADT: 6480 (2018)/8730 (2038)
SBL DHV: 700 (2038)
SBL ADTT: 2740 (2018)/3690 (2038)
Design Speed: 70 mph
Posted Speed: 70 mph

SEISMIC DATA

Seismic Performance Zone (SPZ) = 3
Design Spectral Acceleration at 1.0 sec. (S_{D1}) = 0.460
Design Spectral Acceleration at 0.2 sec. (S_{DS}) = 1.213
Site Soil Class = C

LOADING HL-93

Allow 50 psf for future wearing surface

DESIGN SPECIFICATIONS

2017 AASHTO LRFD
Bridge Design Specifications 8th Edition

DESIGN STRESSES FIELD UNITS

f'c = 3,500 psi (substructure)
f'c = 4,000 psi (superstructure)
fy = 50,000 psi (AASHTO M270 Grade 50)
fy = 60,000 psi (reinforcement)

LOCATION SKETCH

GENERAL PLAN & ELEVATION
I-57 OVER BIG CREEK
F.A.I. RTE. 57 - SECTION (91-3)B-2
UNION COUNTY
STATION 2896+15.00 (NB)
STATION 2894+90.07 (SB)
STRUCTURE NO. 091-0077 (NB)
STRUCTURE NO. 091-0078 (SB)

ESCA CONSULTANTS, INC. CIVIL & STRUCTURAL ENGINEERS

USER NAME = kja	DESIGNED - KJA 04/18	REVISED - - -	STATE OF ILLINOIS DEPARTMENT OF TRANSPORTATION		
ESCA PROJECT NO. 1259.04	CHECKED - ELH 04/18	REVISED - - -			
PLOT SCALE = 0:2 ':' / in.	DRAWN - KJA 04/18	REVISED - - -			
PLOT DATE = 4/9/2019 1:18:59 PM	CHECKED - ELH 04/19	REVISED - - -		SHEET NO. 1 OF 2 SHEETS	

F.A.I. RTE.	SECTION	COUNTY	TOTAL SHEETS	SHEET NO.
57	(91-3)B-2	UNION	-	-
		CONTRACT NO. 78504		
		ILLINOIS FED. AID PROJECT		

PRINT DRIVER = pltcrss
PENTABLE = ESCA.tbl
MODEL NAME = PLOT
FILENAME = 91B05-78504-1S_1.dgn

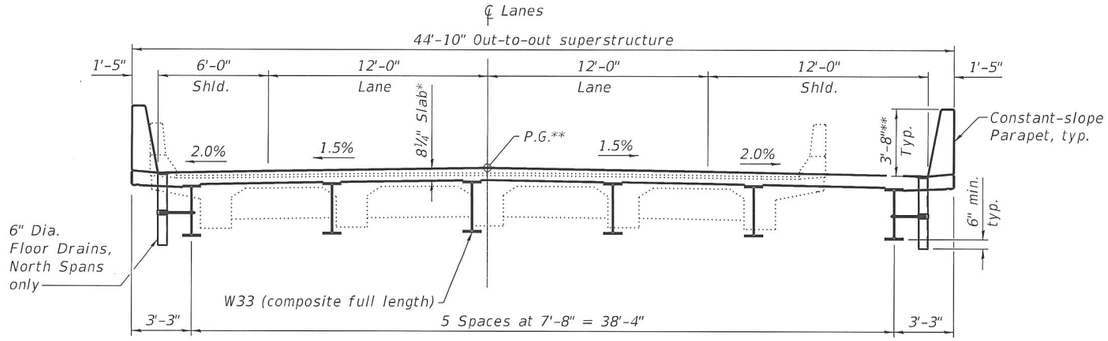

CROSS SECTION

(SN 091-0077 looking north, SN 091-0078 looking south)

* Prior to grinding
** After grinding

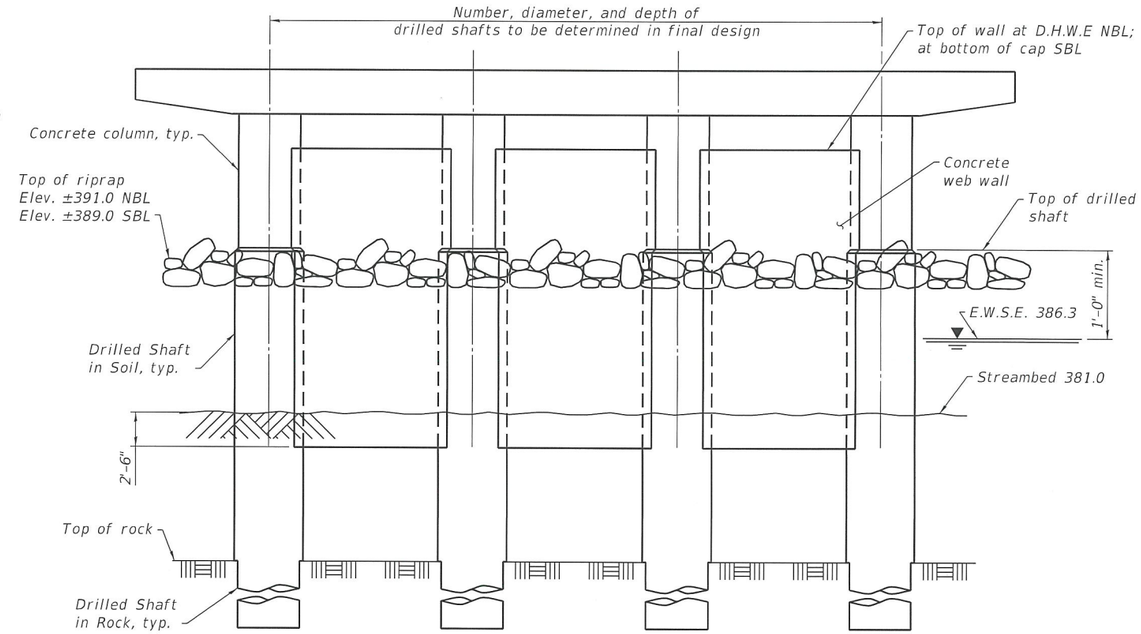

PIER SKETCH

SN 091-0077 WATERWAY INFORMATION

Drainage Area = 17.4 Sq. Mi.
Exist. Overtopping Elev. 409.84 at Sta. 2895+18
Prop. Overtopping Elev. 410.07 at Sta. 2894+59

Flood	Freq. Yr.	Discharge (cfs)	Waterway Opening (sq. ft.) Exist.	Waterway Opening (sq. ft.) Prop.	Nat. H.W.E.	Head (ft.) Exist.	Head (ft.) Prop.	Headwater Elev. (ft.) Exist.	Headwater Elev. (ft.) Prop.
	10	4150	887	898	398.0	1.0	1.0	399.0	399.0
Design	50	6270	1044	1077	399.7	1.5	1.4	401.2	401.1
Base	100	7180	1102	1147	400.3	1.7	1.7	402.0	402.0
Scour Design Check	200	8197	1161	1218	400.9	2.0	2.0	402.9	402.9
Overtop Existing	-	-	-	-	-	-	-	-	-
Overtop Proposed	-	-	-	-	-	-	-	-	-
Max. Calc.	500	9560	1222	1291	401.5	2.4	2.4	403.9	403.9

10 Year Outlet Velocity through Existing Structure: 4.6 ft/s
10 Year Outlet Velocity through Proposed Structure: 4.5 ft/s

SN 091-0078 WATERWAY INFORMATION

Drainage Area = 17.4 Sq. Mi.
Exist. Overtopping Elev. 404.76 at Sta. 2893+50
Prop. Overtopping Elev. 405.04 at Sta. 2893+06

Flood	Freq. Yr.	Discharge (cfs)	Waterway Opening (sq. ft.) Exist.	Waterway Opening (sq. ft.) Prop.	Nat. H.W.E.	Head (ft.) Exist.	Head (ft.) Prop.	Headwater Elev. (ft.) Exist.	Headwater Elev. (ft.) Prop.
	10	4150	856	890	398.1	1.0	1.0	399.1	399.1
Design	50	6270	1054	1098	400.0	1.5	1.4	401.5	401.4
Base	100	7180	1103	1177	400.7	1.7	1.7	402.4	402.4
Scour Design Check	200	8197	1160	1244	401.3	2.0	2.0	403.3	403.3
Overtop Existing	-	-	-	-	-	-	-	-	-
Overtop Proposed	-	-	-	-	-	-	-	-	-
Max. Calc.	500	9560	1222	1290	402.1	2.4	2.4	404.5	404.5

10 Year Outlet Velocity through Existing Structure: 4.6 ft/s
10 Year Outlet Velocity through Proposed Structure: 4.3 ft/s

SN 091-0077 DESIGN SCOUR ELEVATION TABLE

Event / Limit State	Design Scour Elevations (ft.) N. Abut.	Pier 1	Pier 2	S. Abut.	Item 113
Q100	402.3	369.7	369.7	403.0	5
Q200	402.3	369.7	369.7	403.0	
Design	402.3	369.7	369.7	403.0	
Check	402.3	369.7	369.7	403.0	

SN 091-0078 DESIGN SCOUR ELEVATION TABLE

Event / Limit State	Design Scour Elevations (ft.) N. Abut.	Pier 1	Pier 2	S. Abut.	Item 113
Q100	397.2	370.3	370.3	398.2	5
Q200	397.2	370.3	370.3	398.2	
Design	397.2	370.3	370.3	398.2	
Check	397.2	370.3	370.3	398.2	

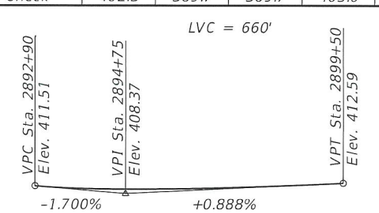

NBL PROFILE GRADE

(Along ℄ lanes)

(PG shows the final elevations after grinding)

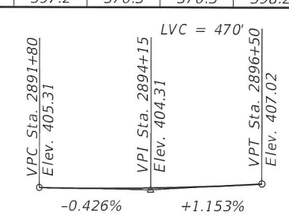

SBL PROFILE GRADE

(Along ℄ lanes)

(PG shows the final elevations after grinding)

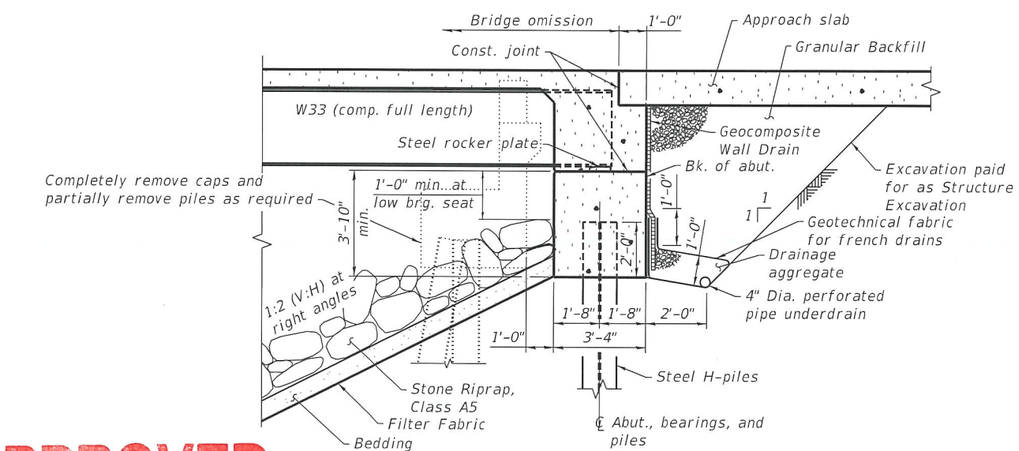

SECTION THROUGH ABUTMENT

(Horizontal dimensions at rt. angles)

APPROVED

APR 12 2019

AS A BASIS FOR PREPARATION OF DETAILED PLANS

DETAILS

I-57 OVER BIG CREEK

F.A.I. RTE. 57 - SECTION (91-3)B-2

UNION COUNTY

STATION 2896+15.00 (NB)

STATION 2894+90.07 (SB)

STRUCTURE NO. 091-0077 (NB)

STRUCTURE NO. 091-0078 (SB)

ESCA CONSULTANTS, INC.

USER NAME = kjo	DESIGNED - KJA 04/18	REVISED - - -	STATE OF ILLINOIS DEPARTMENT OF TRANSPORTATION
ESCA PROJECT NO. 1259.04	CHECKED - RDP 04/18	REVISED - - -	
PLOT SCALE = 8:2 ':' / in.	DRAWN - KJA 04/18	REVISED - - -	
PLOT DATE = 4/9/2019 1:19:10 PM	CHECKED - ELH 04/19	REVISED - - -	

SHEET NO. 2 OF 2 SHEETS

F.A.I. RTE.	SECTION	COUNTY	TOTAL SHEETS	SHEET NO.
57	(91-3)B-2	UNION	-	-

CONTRACT NO. 78504

ILLINOIS FED. AID PROJECT