Benchmark: Chiseled square on top of abutment end treatment at the NW corner of the south structure; S.N. 092-0006; Elev. 612.39

Existing Structure: Structure No's 092-0006 & 092-0007 were originally constructed in 1962 as Section 92-11B. In 1977, the structure was repaired with improvements consisting of deck patching, expansion device reconstruction, installation of waterproofing membrane system and HMA overlay. In 1991, the deck was replaced, the bearings were replaced, some floorbeams were replaced, and the abutments and piers were repaired as Section 92-11BR. In 2008, the structure received scour mitigation improvements consisting of placing A4 and A5 riprap around Piers 2 and 3. In 2018, the parapet was repaired due to impact damage. The superstructure consists of seven span fracture critical steel beam structure. It consists of one 94' simple span and six continuous spans (1@94'-0"; 4@115'-9"; 1@93'-6") for a back to back abutment length of 749'-6" with a 9" reinforced concrete deck on two 84" riveted steel plate girders with 66 floor beams (24WF94) supported by six double column piers (piers 1A thru 3 on spread footings and piers 4 and 5 with steel piles) and vaulted abutments with spread footings under the west and concrete piles under the east. The clear deck width is 32'-10" with 1'-7" parapets for an out-to-out width of 36'-0". The existing superstructure is to be removed and replaced with a continuous 6 girder system on new pier caps and abutment cap extensions. Traffic will be maintained utilizing cross-overs.

No salvage.

SCOPE OF WORK

1. Remove and replace existing superstructure.
2. Remove and replace collar ties on WB Pier 1A.
3. Remove and replace existing slopewalls.
4. Perform structural concrete repairs on substructure as noted in the Bridge Condition Report.
5. Add abutment cap extensions and new pier caps.

HIGHWAY CLASSIFICATION

F.A.I. Route 74 over Salt Fork Vermilion River
Functional Class: Interstate
ADT: 11,000 (2017); 12,200 (2037)
ADTT: 3,097 (2017); 3,404 (2037)
DHV: 850 (2037)
Design Speed: 70 m.p.h.
Posted Speed: 70 m.p.h.
One-Way Traffic
Directional Distribution: 100:0

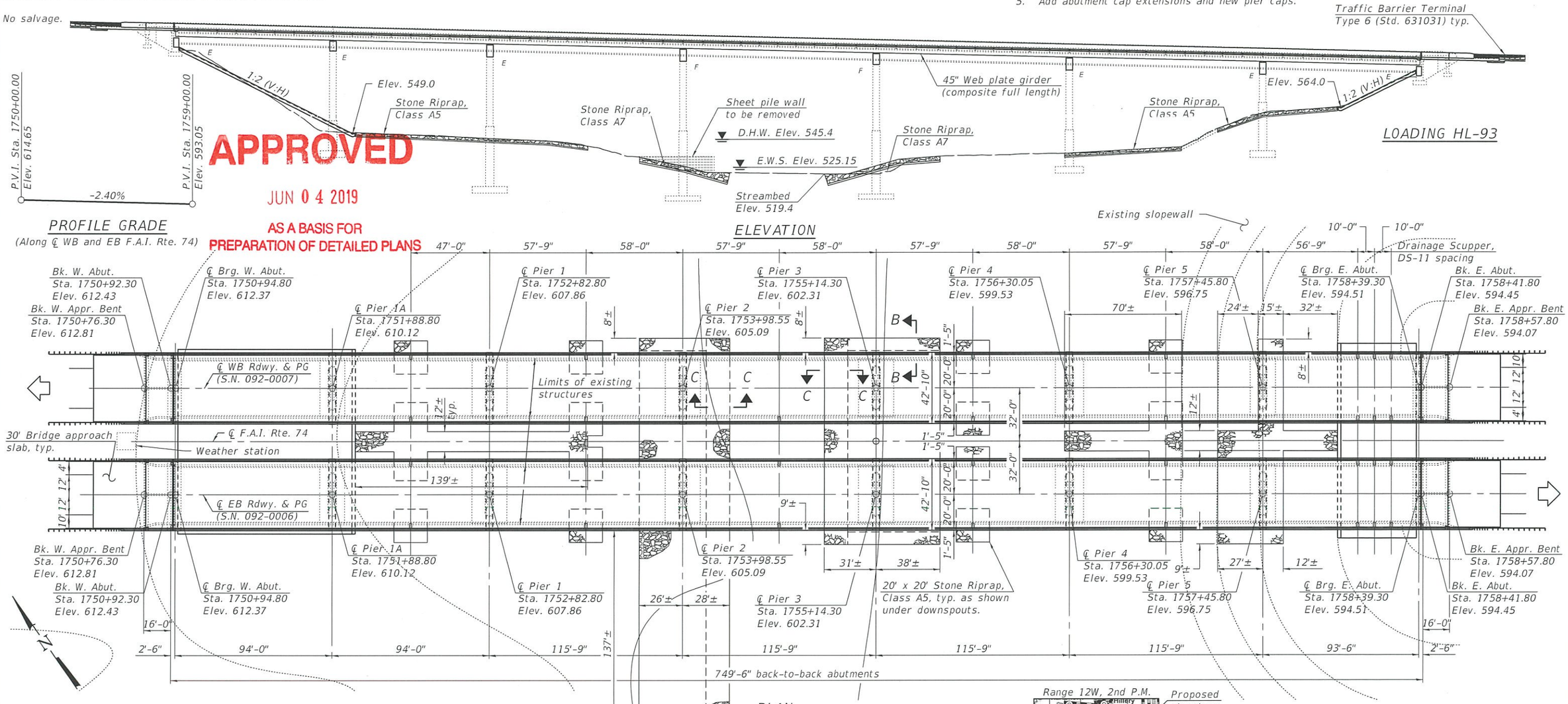

APPROVED
JUN 04 2019
AS A BASIS FOR PREPARATION OF DETAILED PLANS

Notes:
Up to ¼" may be ground off the bridge deck and the approach slabs. The profile grade shows the final elevations after grinding.
The bridge stations and span lengths were derived from survey data and differ from the stations and span lengths shown in the existing plans.
Weather station conduit and electrical box to be removed and replaced by others.
All structural steel shall be metalized or galvanized.

DESIGN STRESSES

FIELD UNITS (New construction)
f'c = 4,000 psi (Superstructure)
f'c = 3,500 psi (Substructure)
fy = 60,000 psi (Reinforcement)
fy = 50,000 psi (M270 Grade 50)

FIELD UNITS (Existing construction)
f'c = 3,500 psi
fy = 40,000 psi (Reinforcement - 1962 original construction)
fy = 60,000 psi (Reinforcement - 1991 construction)

SEISMIC DATA

Seismic Performance Category = A
Horizontal Bedrock Acceleration cofficient = 0.045
Site coefficient = 1.0

DESIGN SPECIFICATIONS

2017 AASHTO LRFD Bridge Design Specifications, 8th Edition

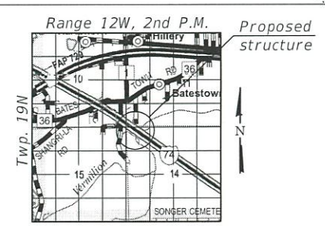

LOCATION SKETCH

GENERAL PLAN & ELEVATION
I-74 OVER SALT FORK VERMILION RIVER
F.A.I. ROUTE 74 - SEC. (92-11)BR-1
VERMILION COUNTY
STATION 1755+14.30
STRUCTURE NO. 092 - 0006
STRUCTURE NO. 092 - 0007

DESIGNED -	JUSTIN T. BELUE	
CHECKED -	NICHOLAS R. BARNETT	
DRAWN -	MICHAEL B. MOSSMAN	
CHECKED -	J.T.B. / N.R.B.	5/31/2019 - 2:49:35 PM

STATE OF ILLINOIS
DEPARTMENT OF TRANSPORTATION

SHEET 1 OF 3 SHEETS

F.A.I. RTE.	SECTION	COUNTY	TOTAL SHEETS	SHEET NO.
74	(92-11)BR-1	VERMILION		
		CONTRACT NO. 70A92		
	ILLINOIS	FED. AID PROJECT		

MODEL: 0920006-70A92-TSL-001
FILE NAME: pw:\\planroom.dot.illinois.gov:PWIDOT\Documents\IDOT Offices\Bureau of Bridges and Structures\Projects\0920006\CADD Plans\0920006-70A92.dgn

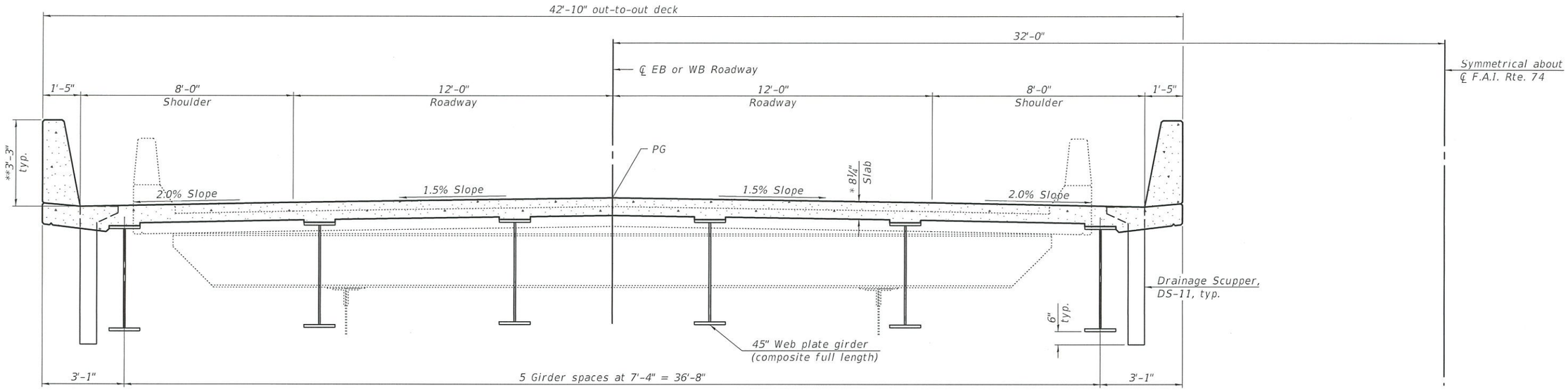

CROSS SECTION

* Prior to grinding

** After grinding

APPROVED

JUN 0 4 2019

AS A BASIS FOR PREPARATION OF DETAILED PLANS

WATERWAY INFORMATION

Drainage Area = 976.64 mi²

Existing Low Grade Elev. 586.64 @ Sta. 1763+58
Proposed Low Grade Elev. 586.64 @ Sta. 1763+58

Flood	Freq. Yr.	Q C.F.S.	Opening Ft² Exist.	Opening Ft² Prop.	Nat. H.W.E.	Head - Ft. Exist.	Head - Ft. Prop.	Headwater El. Exist.	Headwater El. Prop.
	10	23200	3913	3913	541.9	0.4	0.4	542.3	542.3
Design	50	35400	5167	5167	545.4	1.1	1.1	546.5	546.5
Base	100	40600	5709	5709	546.7	1.3	1.3	548.0	548.0
Scour Design Check	200	46026	6240	6240	547.9	1.6	1.6	549.5	549.5
Max. Calc.	500	53200	6240	6240	549.3	1.8	1.8	551.1	551.1

10 year velocity through existing bridge = 6.74 ft/s
10 year velocity through proposed bridge = 6.74 ft/s

DESIGN SCOUR ELEVATION TABLE

Event / Limit State	Design Scour Elevations (ft.) W. Abut.	Pier 1A	Pier 1	Pier 2	Pier 3	Pier 4	Pier 5	E. Abut.	Item 113
Q100	594.43	550.5	537.3	500.4	500.4	524.5	561.1	576.55	7
Q200	594.43	550.5	536.3	500.4	500.4	523.5	561.1	576.55	
Design	594.43	533.65	512.12	507.34	508.31	523.77	532.99	576.55	

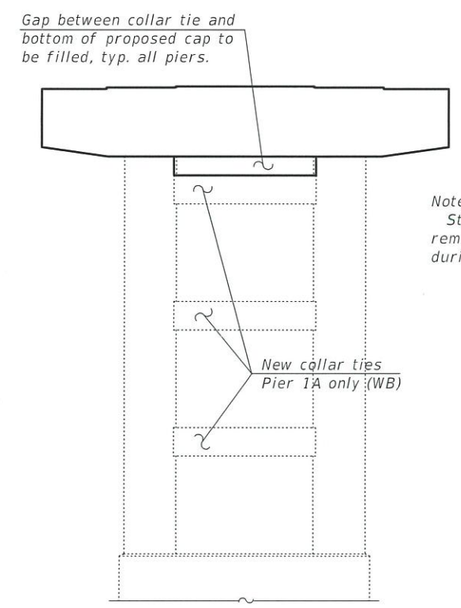

PIER SKETCH

Note:
Stability of the columns during collar tie removal and replacement to be determined during final design.

DETAILS
I-74 OVER SALT FORK VERMILION RIVER
F.A.I. ROUTE 74 - SEC. (92-11)BR-1
VERMILION COUNTY
STATION 1755+14.30
STRUCTURE NO. 092 - 0006
STRUCTURE NO. 092 - 0007

DESIGNED -	JUSTIN T. BELUE
CHECKED -	NICHOLAS R. BARNETT
DRAWN -	MICHAEL B. MOSSMAN
CHECKED -	J.T.B. / N.R.B.

5/31/2019 - 2:13:04 PM

STATE OF ILLINOIS
DEPARTMENT OF TRANSPORTATION

SHEET 2 OF 3 SHEETS

F.A.I. RTE.	SECTION	COUNTY	TOTAL SHEETS	SHEET NO.
74	(92-11)BR-1	VERMILION	—	—

CONTRACT NO. 70A92
ILLINOIS | FED. AID PROJECT

MODEL: 0920006-70A92-TSL-002
FILE NAME: pw:\\planroom.dot.illinois.gov:PWIDOT\Documents\IDOT Offices\Bureau of Bridges and Structures\Projects\0920006\CADD Plans\0920006-70A92.dgn

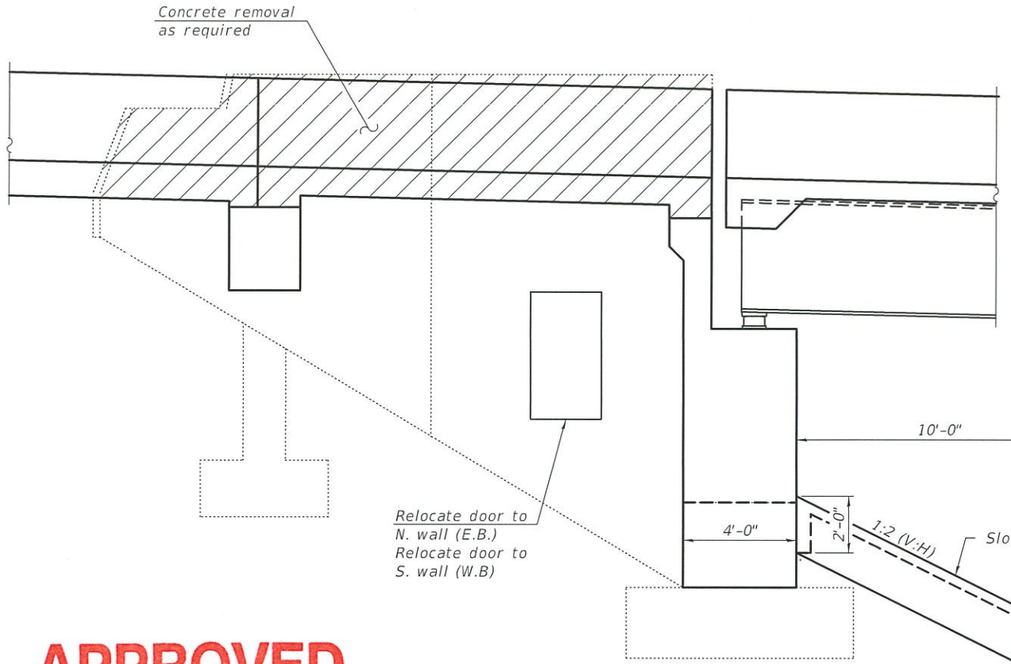

ELEVATION OF
VAULTED ABUTMENT

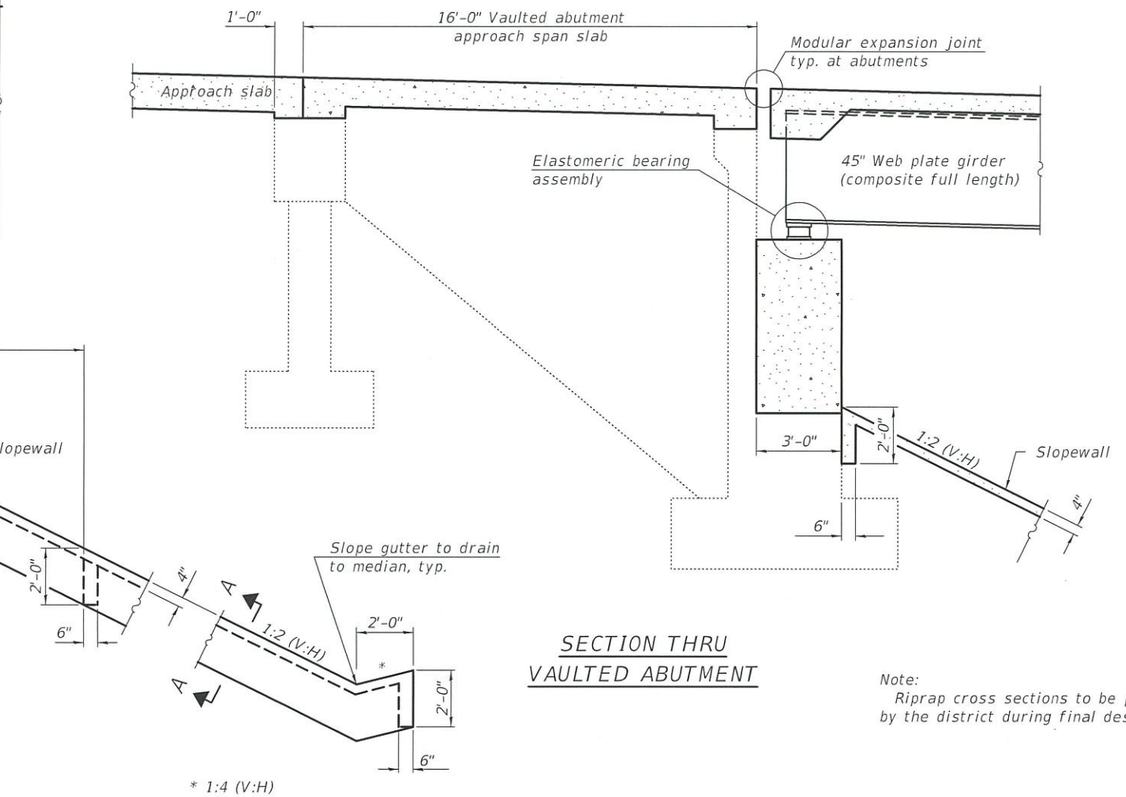

SECTION THRU
VAULTED ABUTMENT

Note:
Riprap cross sections to be provided by the district during final design.

APPROVED

JUN 0 4 2019

AS A BASIS FOR
PREPARATION OF DETAILED PLANS

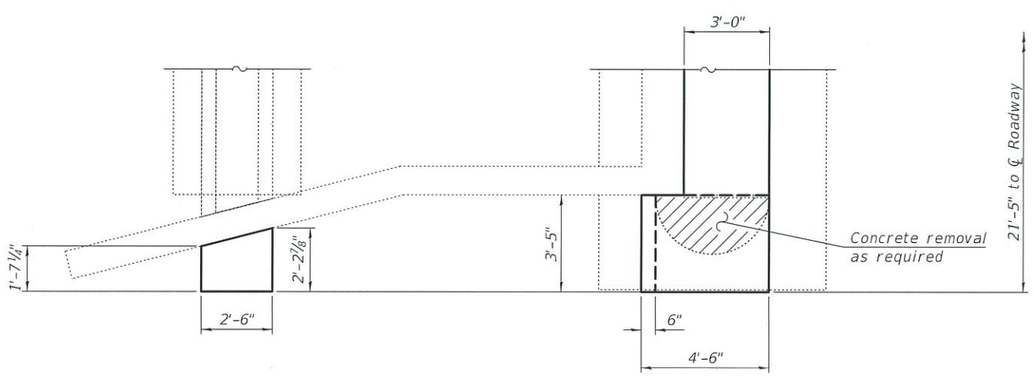

PLAN
(View showing substructure widening. Slabs omitted for clarity)

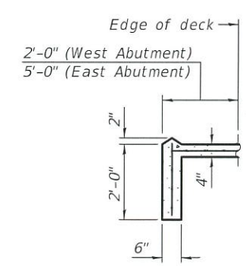

SECTION A-A

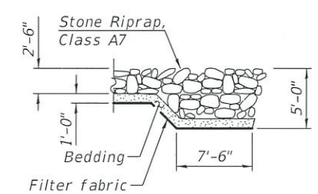

SECTION B-B

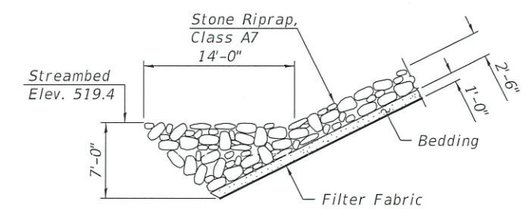

SECTION C-C

DETAILS
I-74 OVER SALT FORK VERMILION RIVER
F.A.I. ROUTE 74 - SEC. (92-11)BR-1
VERMILION COUNTY
STATION 1755+14.30
STRUCTURE NO. 092 - 0006
STRUCTURE NO. 092 - 0007

DESIGNED -	JUSTIN T. BELUE	
CHECKED -	NICHOLAS R. BARNETT	
DRAWN -	MICHAEL B. MOSSMAN	
CHECKED -	J.T.B. / N.R.B.	

5/31/2019 - 2:25:35 PM

STATE OF ILLINOIS
DEPARTMENT OF TRANSPORTATION

SHEET 3 OF 3 SHEETS

F.A.I. RTE.	SECTION	COUNTY	TOTAL SHEETS	SHEET NO.
74	(92-11)BR-1	VERMILION	—	—
		CONTRACT NO. 70A92		
		ILLINOIS FED. AID PROJECT		

MODEL: 0920006-70A92-TSL-003
FILE NAME: pw:\\planroom.dot.illinois.gov:PWIDOT\Documents\IDOT Offices\Bureau of Bridges and Structures\Projects\0920006\CADD Plans\0920006-70A92.dgn