Benchmark: Cut "□" south side of eastern base of 30 mph ramp sign located east of the ramp connecting I-39 NB to US 20 West (Ramp DA) 0.1 mile north of the centerline of Linden Road. Elev. 851.37, 42°-13'-06.37" N. 89°-00'-39.64" W.

Existing Structure: None

Stage Construction will be utilized to maintain one lane of traffic at all times. Stage I Traffic will be maintained on existing Ramp DA.

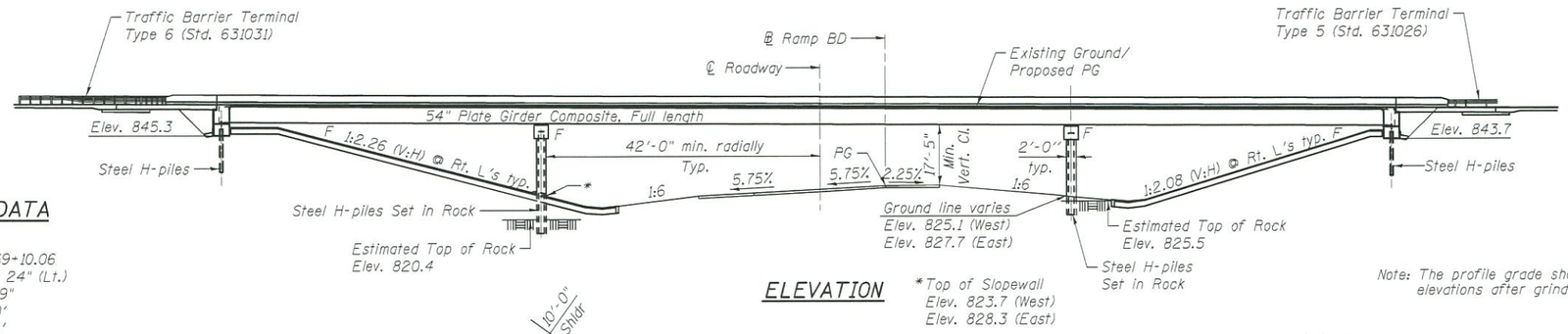

ELEVATION

Note: The profile grade shows the final elevations after grinding

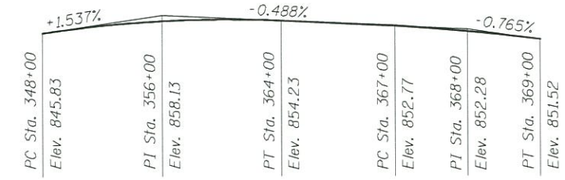

PROFILE GRADE

(Along ℄ Ramp DA)

PROFILE GRADE

(Along ℄ Ramp BD)

CURVE DATA

Ramp BD
P.I. Sta. = 169+10.06
Δ = 107° 00' 24" (Lt.)
D = 2° 14' 49"
R = 2,550.00'
T = 3,446.54'
L = 4,762.42'
E = 1,737.32
SE = 5.75%
P.C. Sta. = 134+63.52
P.T. Sta. = 182+25.95

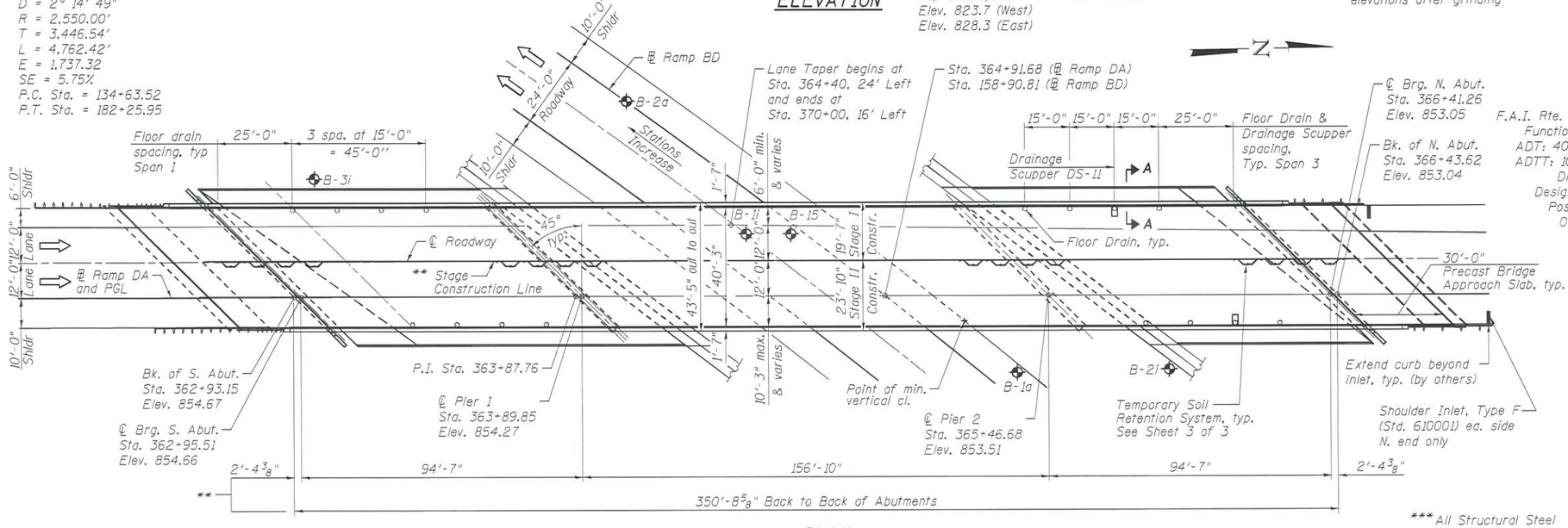

PLAN

** Along a line parallel to the Structure Reference Line

Note: Up to 1/4 inch may be ground off the bridge deck and the bridge approach slabs.

*** All Structural Steel shall be metalized

HIGHWAY CLASSIFICATION

F.A.I. Rte. 39 - I-39 NB Ramp DA
Functional Class: Interstate
ADT: 4050(2013); 6400(2040)
ADTT: 1000(2013); 1600(2040)
DHV: 640 (2040)
Design Speed: 50 m.p.h.
Posted Speed: 45 m.p.h.
One-Way Traffic

F.A.I. Rte. 39 - I-39 SB Ramp BD
Functional Class: Interstate
ADT: 10,000(2013); 28,000(2040)
ADTT: 4200(2013); 11,700(2040)
DHV: 2250 (2040)
Design Speed: 70 m.p.h.
Posted Speed: 65 m.p.h.
One-Way Traffic

LOADING HL-93

Allow 50#/sq. ft. for future wearing surface.

DESIGN SPECIFICATIONS

2014 AASHTO LRFD Bridge Design Specifications, 7th Edition with 2015 and 2016 Interims

DESIGN STRESSES

FIELD UNITS

f'c = 3,500 psi
f'c = 4,000 (Superstructure Concrete)
fy = 60,000 psi (Reinforcement)
fy = 50,000 psi (M270 Grade 50) ***

PRECAST UNITS

f'c = 6,000 psi

SEISMIC DATA

Seismic Performance Zone (SPZ) = 1
Design Spectral Acceleration at 1.0 sec. (S_{D1}) = 0.056 g
Design Spectral Acceleration at 0.2 sec. (S_{DS}) = 0.10 g
Soil Site Class = C

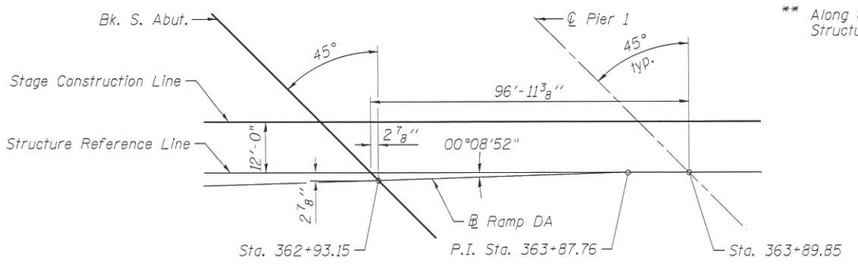

OFFSET SKETCH

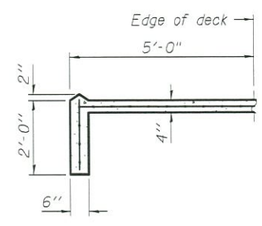

SECTION A-A

APPROVED
MAR 08 2017
AS A BASIS FOR PREPARATION OF DETAILED PLANS

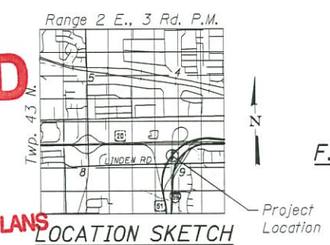

LOCATION SKETCH

GENERAL PLAN
I-39 NB (RAMP DA) OVER
I-39 SB (RAMP BD)
F.A.I. RTE. 39 SEC. (201-3)K & (4-1,5)R
WINNEBAGO COUNTY
STATION 364+91.68
STRUCTURE NO. 101-0204

FILE NAME = ...\1010204-64C62-001-s1.dgn

FEHR GRAHAM ENGINEERING & ENVIRONMENTAL ILLINOIS DESIGN FIRM NO. 184-003525	USER NAME = myoung	DESIGNED - GB/CME	REVISED -
		CHECKED - MCB	REVISED -
	PLOT SCALE = 42.6667 ' / in.	DRAWN - MMY	REVISED -
	PLOT DATE = 3/8/2017	CHECKED - MCB	REVISED -

FEHR GRAHAM PROJECT NUMBER: 15-1002 CB PROJ. NO.: 06085

STATE OF ILLINOIS
DEPARTMENT OF TRANSPORTATION

SHEET NO. 1 OF 3 SHEETS

F.A.I RTE.	SECTION	COUNTY	TOTAL SHEETS	SHEET NO.
39	(201-3)K & (4-1,5)R	WINNEBAGO		
		CONTRACT NO. 64C62		
	ILLINOIS FED. AID PROJECT			

Note: Stage I Traffic is located on existing roadway.
See Sheet 3 of 3 for additional staging details.

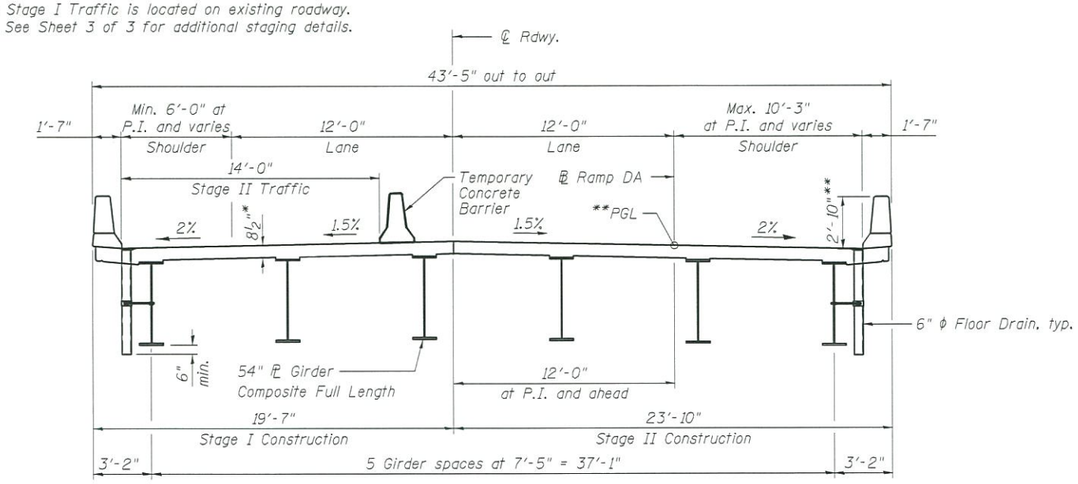

CROSS SECTION

(Looking North)
Dimensions at rt. L's to structure

*Prior to Grinding
**After Grinding

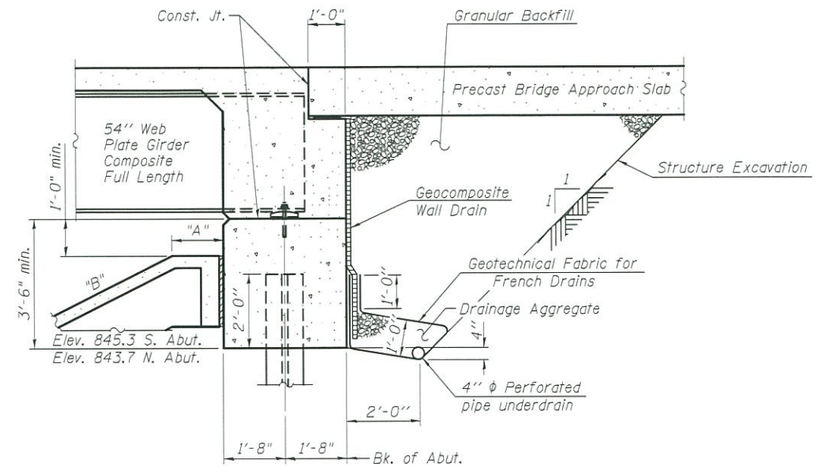

SECTION THRU INTEGRAL ABUTMENT

(Horiz. dim. @ Rt. L's)

"A" - Berm width Varies
0" to 12'-3½" S. Abut.
0" to 7'-9⅝" N. Abut.

"B" - Slope at right angles
1:2.26 (V:H) S. Abut.
1:2.08 (V:H) N. Abut.

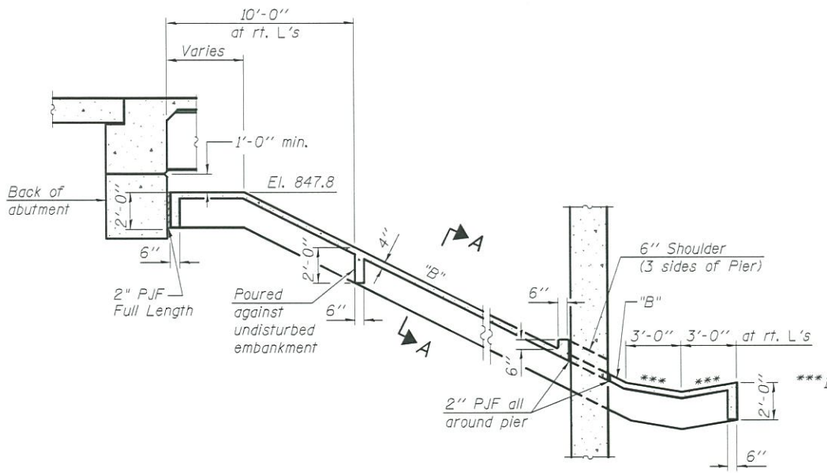

SECTION THRU CONCRETE SLOPEWALL

South Abutment

Note: See Sheet 1 of 3 for Section A-A.

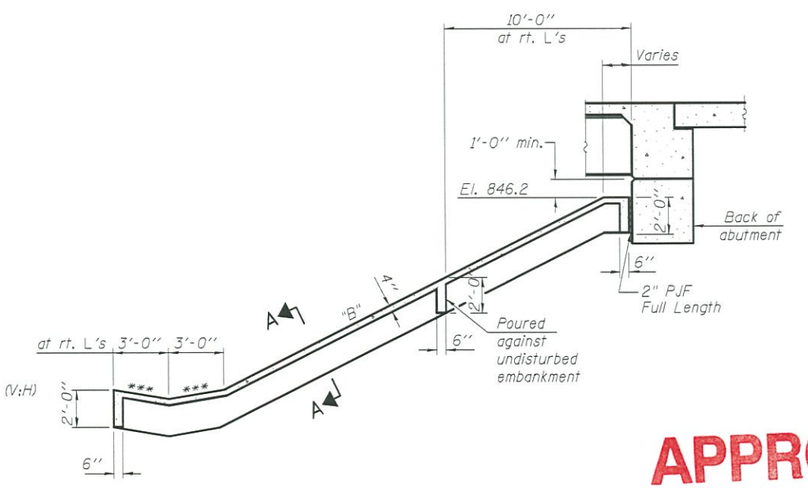

SECTION THRU CONCRETE SLOPEWALL

North Abutment

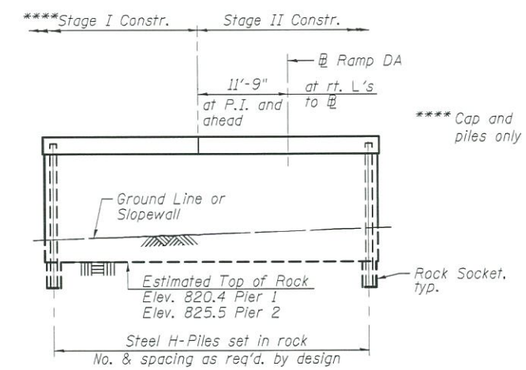

PIER SKETCH

(Looking North)

APPROVED
MAR 08 2017
AS A BASIS FOR PREPARATION OF DETAILED PLANS

GENERAL PLAN
I-39 NB (RAMP DA) OVER
I-39 SB (RAMP BD)
F.A.I. RTE. 39 SEC. (201-3)K & (4-1,5)R
WINNEBAGO COUNTY
STATION 364+91.68
STRUCTURE NO. 101-0204

FILE NAME = ...\1010204-64C62-002-tul.dgn

FEHR GRAHAM ENGINEERING & ENVIRONMENTAL ILLINOIS DESIGN FIRM NO. 184-003525	USER NAME = myoung	DESIGNED - GB/CME	REVISED -
		CHECKED - MCB	REVISED -
	PLOT SCALE = 8:0.00 '1' / in.	DRAWN - MMY	REVISED -
	PLOT DATE = 3/8/2017	CHECKED - MCB	REVISED -

FEHR GRAHAM PROJECT NUMBER: 15-1002 CB PROJ. NO.: 06085

STATE OF ILLINOIS
DEPARTMENT OF TRANSPORTATION

SHEET NO. 2 OF 3 SHEETS

F.A.I RTE.	SECTION	COUNTY	TOTAL SHEETS	SHEET NO.
39	(201-3)K & (4-1,5)R	WINNEBAGO		
		CONTRACT NO. 64C62		
		ILLINOIS FED. AID PROJECT		

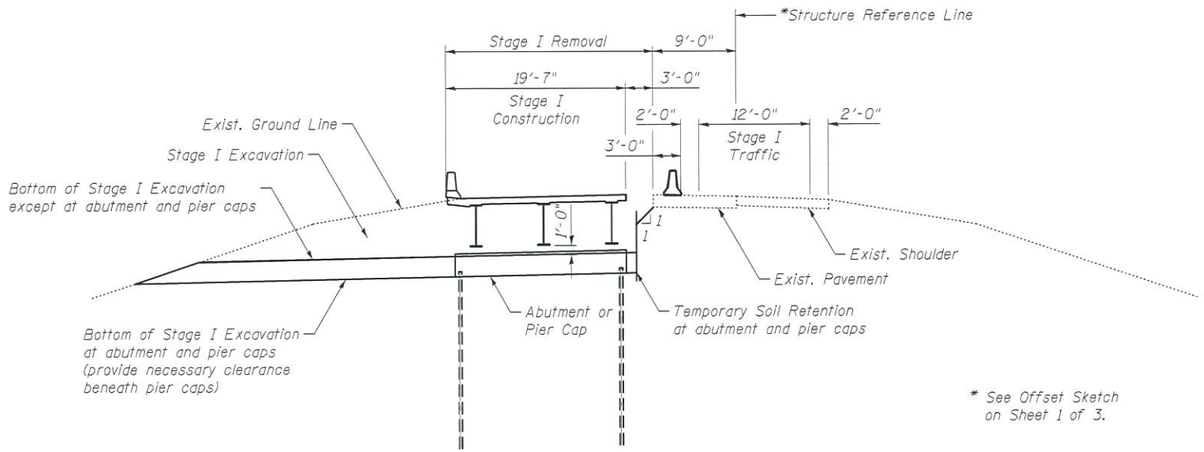

* See Offset Sketch on Sheet 1 of 3.

STAGE I CONSTRUCTION

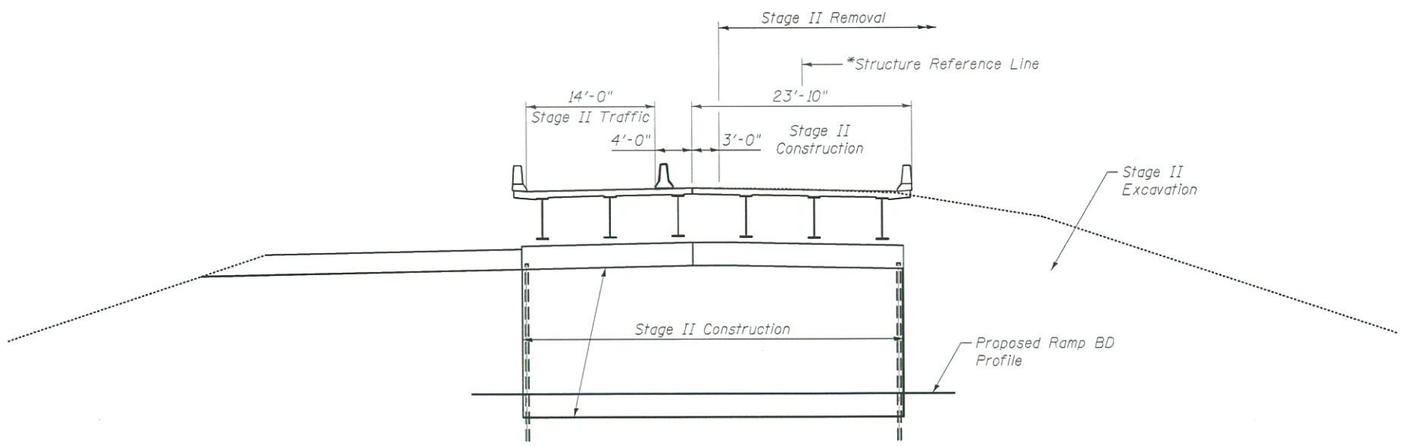

STAGE II CONSTRUCTION

(Showing Pier construction, abutment construction similar)

CONSTRUCTION SEQUENCE

Ramp DA over Ramp BD will be constructed using a top-down construction method to maintain one lane of traffic on existing/proposed Ramp DA at all times as indicated below.

1. Direct Ramp DA traffic to Stage I Traffic.
2. Proceed with Stage I Excavation to 1'-0" below the bottom of the proposed girders across the spans using slopes laid back at 1:1 as shown on Stage I Construction Detail.
3. Install Temporary Soil Retention System as required at the abutments and piers and excavate as required to construct the caps.
4. Install Stage I piles per SGR recommendations.
5. Proceed with Stage I Construction of abutment and pier caps, superstructure and approach slabs.
6. Direct Ramp DA traffic to Stage II Traffic.
7. Proceed with Stage II Excavation beneath Stage I Construction and as required for Stage II Construction.
8. Proceed with Stage II Construction.

APPROVED

MAR 08 2017

AS A BASIS FOR PREPARATION OF DETAILED PLANS

GENERAL PLAN
I-39 NB (RAMP DA) OVER
I-39 SB (RAMP BD)
F.A.I. RTE. 39 SEC. (201-3)K & (4-1,5)R
WINNEBAGO COUNTY
STATION 364+91.68
STRUCTURE NO. 101-0204

FILE NAME = ...\1010204-64C62-003-staging.dgn

FEHR GRAHAM ENGINEERING & ENVIRONMENTAL ILLINOIS DESIGN FIRM NO. 184-003525	USER NAME = myoung	DESIGNED - CME	REVISED -	STATE OF ILLINOIS DEPARTMENT OF TRANSPORTATION		F.A.I RTE.	SECTION	COUNTY	TOTAL SHEETS	SHEET NO.
		CHECKED - MCB	REVISED -			39	(201-3)K & (4-1,5)R	WINNEBAGO		
	PLOT SCALE = 16:0.000120 ':' / in.	DRAWN - CFC	REVISED -					CONTRACT NO. 64C62		
	PLOT DATE = 3/8/2017	CHECKED - MCB	REVISED -		SHEET NO. 3 OF 3 SHEETS		ILLINOIS FED. AID PROJECT			

FEHR GRAHAM PROJECT NUMBER: 15-1002 CB PROJ. NO.: 06085