Bench Mark: B.M. 405 - N-2030863.68, E-2621037.13 - Elev. 770.67 - N.W. bolt on northerly overhead sign post of "Belvidere Exit 122A" sign. Approx. 400' into ramp. (East side of Ramp).

Existing SN 101-0071 & SN 101-0072 built as Section 5-HB in 1963. In 1990 the dual structures were widened and rehabilitated. Both structures consist of four span concrete deck on continuous steel wide flange superstructures supported by concrete piers and spill through abutments. Both structures are 228'-1" back to back abutments. SN 101-0071 width varies from 52'-8" to 56'-7". SN 101-0072 width varies from 52'-10" to 56'-4¾". Traffic to be maintained utilizing staged construction.

No Salvage

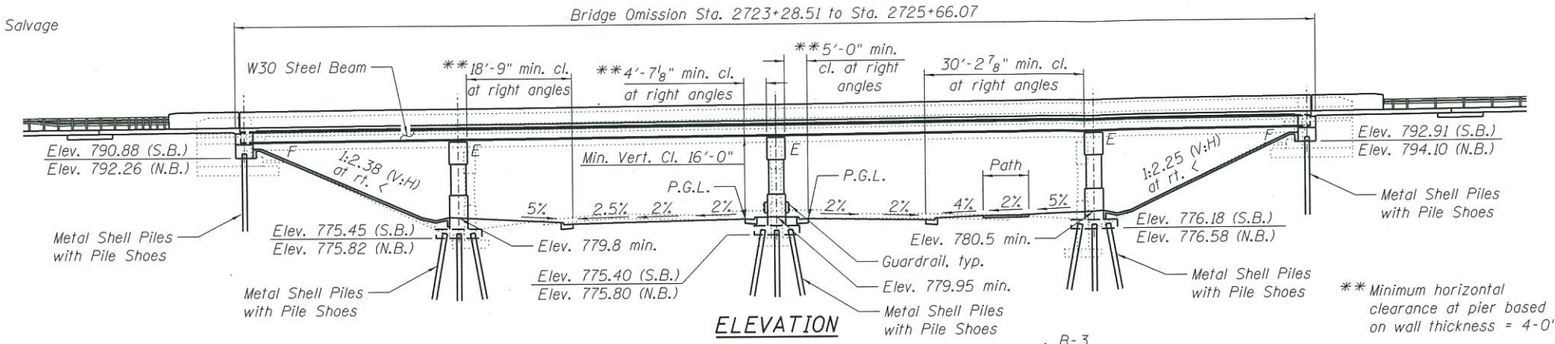

** Minimum horizontal clearance at pier based on wall thickness = 4'-0".

ELEVATION

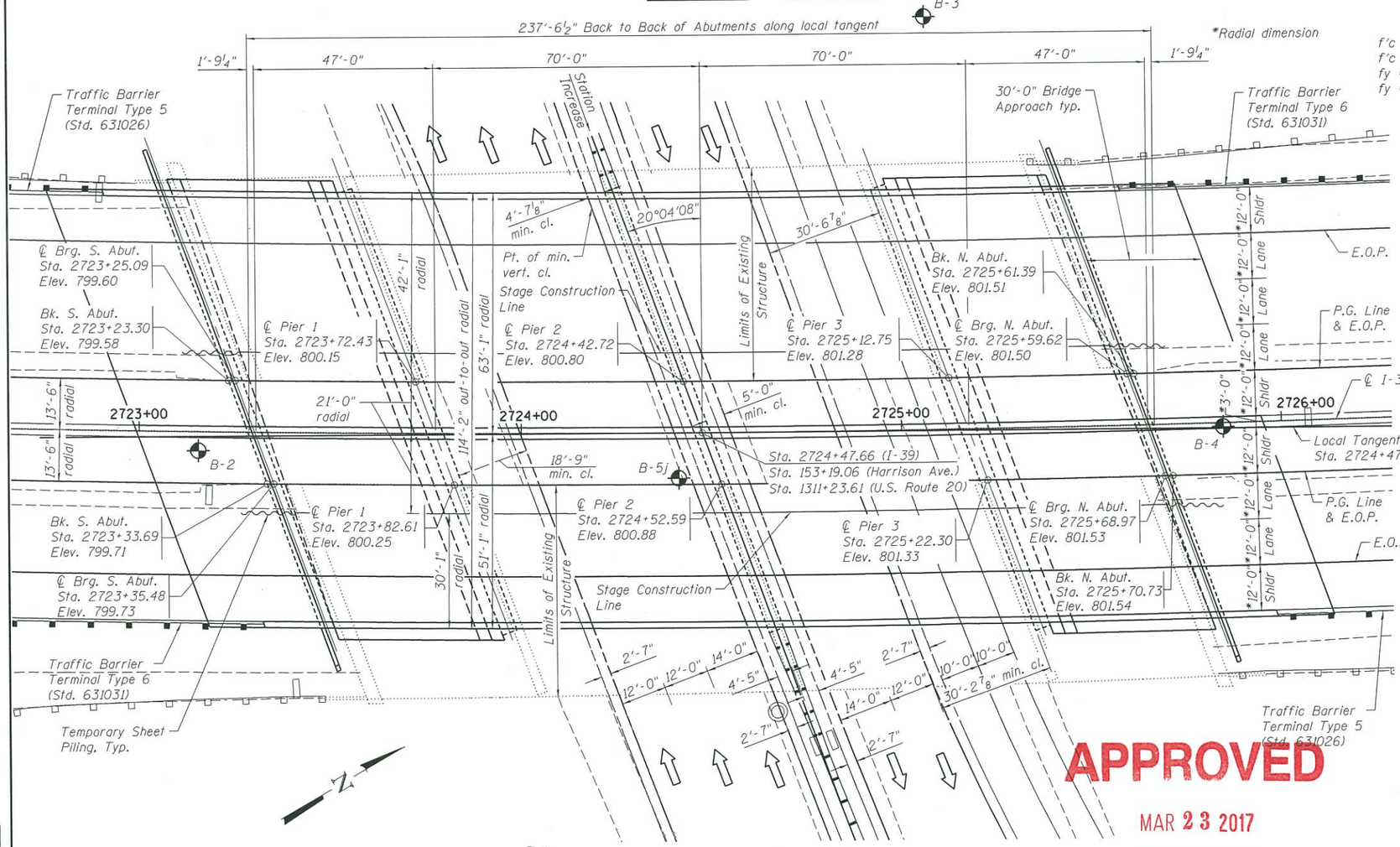

PLAN

HIGHWAY CLASSIFICATION

F.A.P. Rte. 0525 - Harrison
Functional Class: Other Principal Arterial
ADT: 29,000 (2015); 41,250 (2035)
ADTT: 2,610 (2015); 3,713 (2035)
DHV: 4,125 (2035)
Design Speed: 35 m.p.h.
Posted Speed: 35 m.p.h.
2 -Way Traffic
Directional Distribution: 50:50

HIGHWAY CLASSIFICATION

F.A.I. Rte. 39 - I-39/U.S. 20
Functional Class: Interstate
ADT: 63,800 (2015); 104,800 (2035)
ADTT: 18,502 (2015); 30,392 (2035)
DHV: 10,480 (2035)
Design Speed: 70 m.p.h.
Posted Speed: 65 m.p.h.
2 -Way Traffic
Directional Distribution: 50:50

DESIGN STRESSES

FIELD UNITS

f'c = 3,500 psi (Substructure Concrete)
f'c = 4,000 psi (Superstructure Concrete)
fy = 60,000 psi (Reinforcement)
fy = 50,000 psi (Structural Steel) ***
(M270 Grade 50)

*** All structural steel shall be metalized.

LOADING HL-93

Allow 50#/sq. ft. for future wearing surface.

DESIGN SPECIFICATIONS

2014 AASHTO LRFD Bridge Design Specifications, 7th Edition with 2015 and 2016 Interims

SEISMIC DATA

Seismic Performance Zone (SPZ) = 1
Design Spectral Acceleration at 1.0 sec. (S_{D1}) = 0.056g
Design Spectral Acceleration at 0.2 sec. (S_{DS}) = 0.101g
Soil Site Class = C

CURVE DATA
HARRISON AVE.

PI STA. = 149+02.51
Δ = 8° 20' 45" (LT)
D = 1° 00' 00"
R = 5,729.71'
T = 418.03'
L = 834.59'
E = 15.23'
P.C. STA. = 144+84.47
P.T. STA. = 153+19.06

PI STA. = 1316+03.34
Δ = 9° 34' 19" (LT)
D = 1° 00' 00"
R = 5,729.71'
T = 479.72'
L = 957.22'
E = 20.05'
P.C. STA. = 1311+23.61
P.T. STA. = 1320+80.83

CURVE DATA
F.A.I. I-39

PI STA. = 2724+10.28
Δ = 17° 40' 00" (LT)
D = 0° 50' 00"
R = 6,875.65'
T = 1,068.50'
L = 2,120.05'
E = 82.53'
S.E. = 3.0%
P.C. STA. = 2713+41.77
P.T. STA. = 2734+61.82

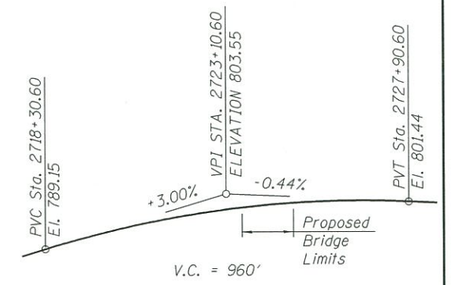

PROPOSED PROFILE

Along I-39/U.S. 20

Note: The profile grade shows the final elevations after grinding. Up to ¼ inch may be ground off the bridge deck and the bridge approach slabs.

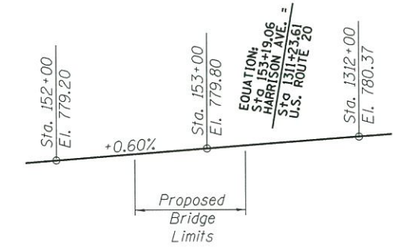

PROPOSED PROFILE

Along Harrison Ave.

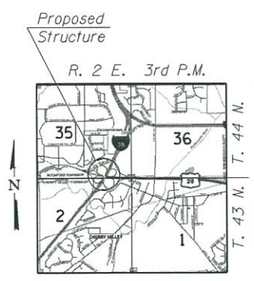

LOCATION SKETCH

GENERAL PLAN
I-39/U.S. 20 over HARRISON AVE.
F.A.I. RTE. 39
SECTION (201-3)K & (4-1, 5)R
WINNEBAGO COUNTY
STATION 2724+47.66
STRUCTURE NUMBER 101-0213 (N.B.)
STRUCTURE NUMBER 101-0214 (S.B.)

APPROVED
MAR 23 2017
AS A BASIS FOR PREPARATION OF DETAILED PLANS

DESIGNED	JKL	05/25/16
DRAWN	MGM	12/06/16
REVIEWED	FLN	12/06/16

I:\06_jobs\06S2055\CADD\Struct\Sheet\1010213 & 1010214-XXXXX-TSL-Harrison-Stl Beam.dgn

© Copyright Hanson Professional Services Inc. 2017

HANSON
PROFESSIONAL DESIGN FIRM LICENSE #184-001084

USER NAME = hussu00411	DESIGNED - JKL	REVISED	
	CHECKED - FLN	REVISED	
PLOT SCALE = 0.1667 ' / in.	DRAWN - MGM / MWH	REVISED	
PLOT DATE = 3/16/2017	CHECKED - JKL	REVISED	

STATE OF ILLINOIS
DEPARTMENT OF TRANSPORTATION

GENERAL PLAN & ELEVATION
STRUCTURE NO. 101-0213 & STRUCTURE NO. 101-0214
SHEET NO. 1 OF 3 SHEETS

F.A.I. RTE.	SECTION	COUNTY	TOTAL SHEETS	SHEET NO.
39	(201-3)K & (4-1, 5)R	WINNEBAGO	3	1
		CONTRACT NO. 64C24		
		ILLINOIS FED. AID PROJECT		

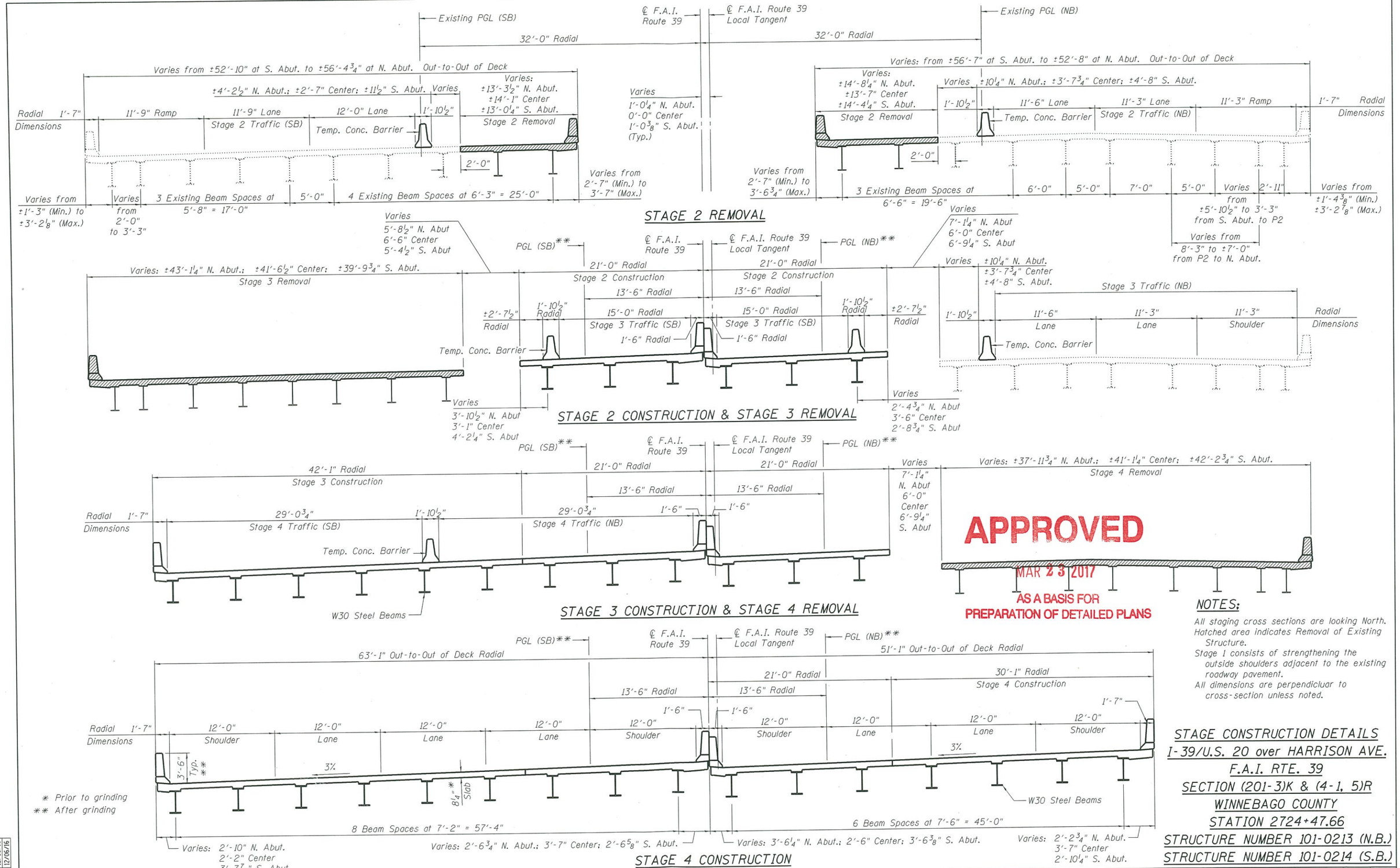

APPROVED
MAR 23 2017
AS A BASIS FOR PREPARATION OF DETAILED PLANS

NOTES:

All staging cross sections are looking North.
Hatched area indicates Removal of Existing Structure.
Stage 1 consists of strengthening the outside shoulders adjacent to the existing roadway pavement.
All dimensions are perpendicluar to cross-section unless noted.

* Prior to grinding
** After grinding

STAGE CONSTRUCTION DETAILS
I-39/U.S. 20 over HARRISON AVE.
F.A.I. RTE. 39
SECTION (201-3)K & (4-1, 5)R
WINNEBAGO COUNTY
STATION 2724+47.66
STRUCTURE NUMBER 101-0213 (N.B.)
STRUCTURE NUMBER 101-0214 (S.B.)

DESIGNED	JKL	05/25/16
DRAWN	MGM	12/06/16
REVIEWED	FLN	12/06/16

I:\06jobs\06S2055\CADD\Struct\Sheet\1010213 & 1010214-XXXXX-StageConstDets-Harrison-Stl Beam.dgn

© Copyright Hanson Professional Services Inc. 2017

HANSON
PROFESSIONAL DESIGN FIRM LICENSE #184-001084

USER NAME =	DESIGNED - JKL	REVISED -	
	CHECKED - FLN	REVISED -	
PLOT SCALE =	DRAWN - MGM / MWH	REVISED -	
PLOT DATE =	CHECKED - JKL	REVISED -	

STATE OF ILLINOIS
DEPARTMENT OF TRANSPORTATION

STAGE CONSTRUCTION DETAILS
STRUCTURE NO. 101-0213 & STRUCTURE NO. 101-0214
SHEET NO. 2 OF 3 SHEETS

F.A.I. RTE.	SECTION	COUNTY	TOTAL SHEETS	SHEET NO.
39	(201-3)K & (4-1, 5)R	WINNEBAGO	3	2
		CONTRACT NO. 64C24		
		ILLINOIS FED. AID PROJECT		

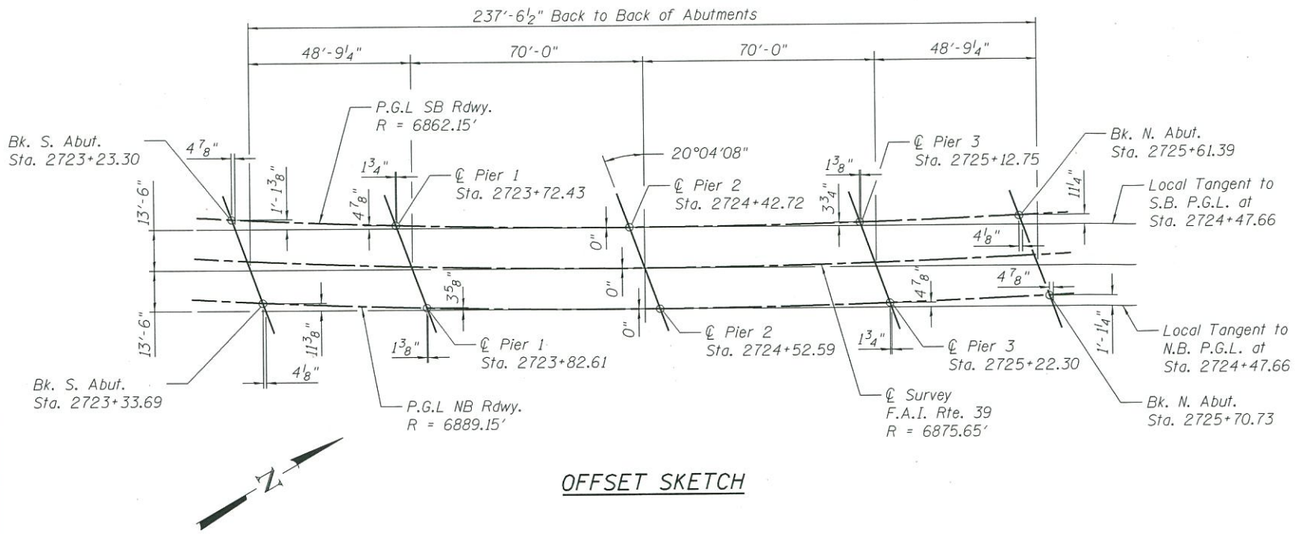

OFFSET SKETCH

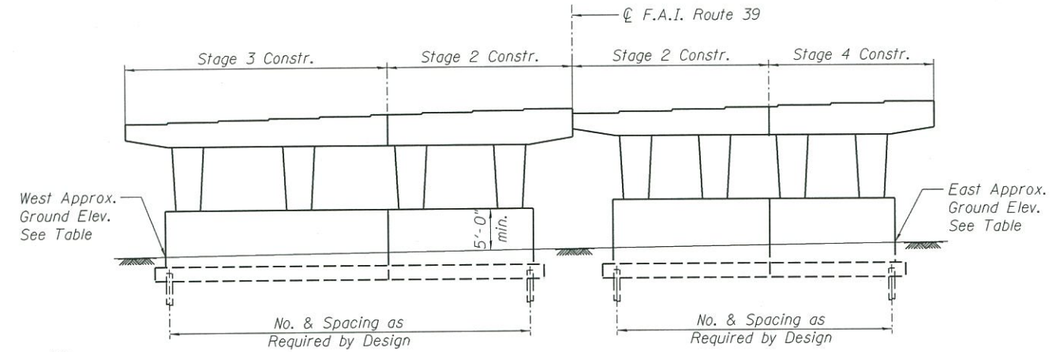

PIER SKETCH
(Looking North)

Notes:

Provide two columns minimum per structure per stage.

All cap cantilevers created by partial removal of existing piers shall be evaluated and temporarily supported to the crashwall below, as required.

DIMENSION "A"

Abut.	End	Value
South	East	0'-0"
	West	3'-2⅞"
North	East	0'-0"
	West	2'-2½"

APPROX. GROUND ELEV.

Pier	End	Elev.
Pier 1	East	780.5
	West	779.8
Pier 2	East	780.7
	West	780.0
Pier 3	East	781.2
	West	780.5

APPROVED
MAR 23 2017
AS A BASIS FOR
PREPARATION OF DETAILED PLANS

TOP OF BERM ELEVATIONS

Abut.	End	Elev.
South	East	795.31
	West	793.38
North	East	797.02
	West	795.41

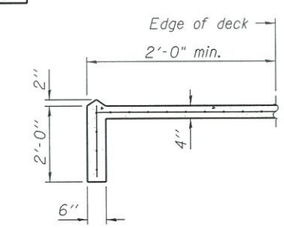

SECTION A-A

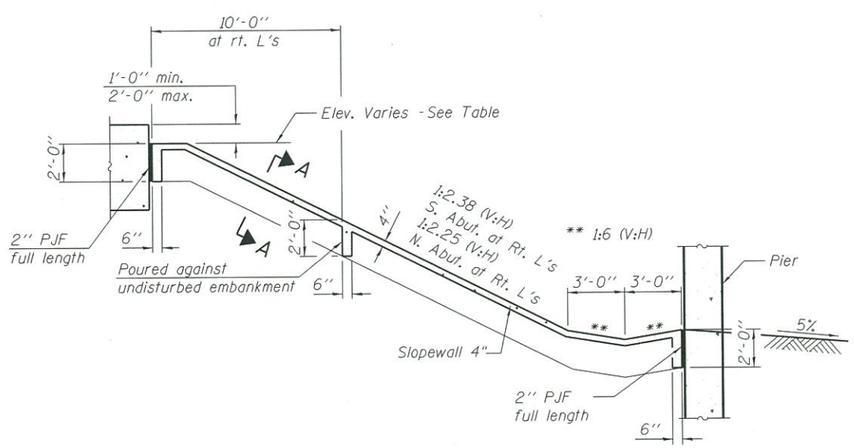

SECTION THRU
CONCRETE SLOPEWALL
(Horiz. dim. @ Rt. L's)

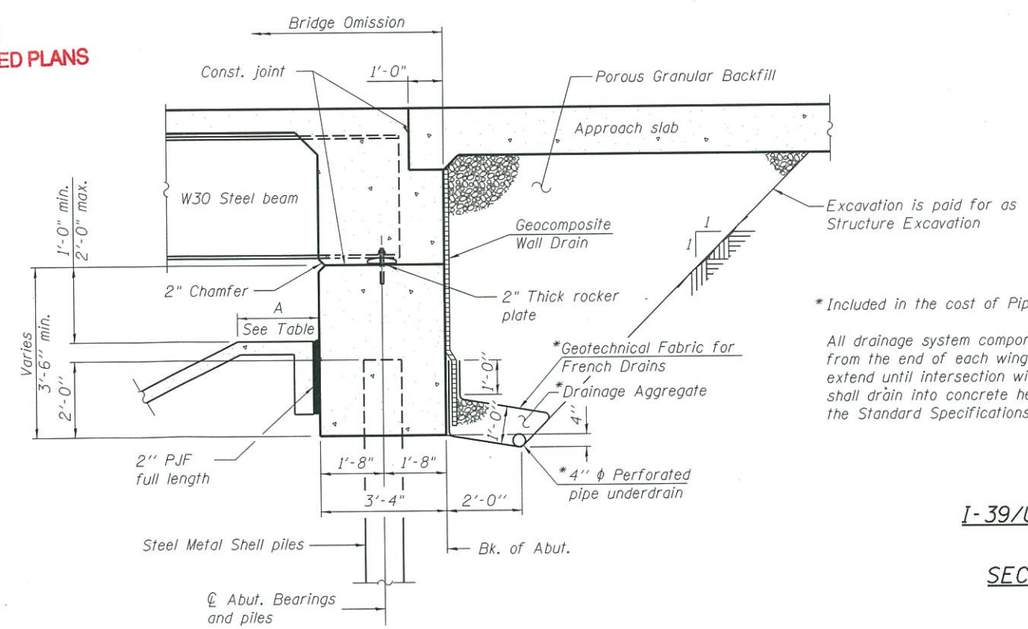

SECTION THRU INTEGRAL ABUTMENT
(Horiz. dim. @ Rt. L's)

*Included in the cost of Pipe Underdrains for structures.

All drainage system components shall extend to 2'-0" from the end of each wingwall except an outlet pipe shall extend until intersection with the side slopes. The pipes shall drain into concrete headwalls. (See Article 601.05 of the Standard Specifications and Highway Standard 601101)

GENERAL DETAILS
I-39/U.S. 20 over HARRISON AVE.
F.A.I. RTE. 39
SECTION (201-3)K & (4-1, 5)R
WINNEBAGO COUNTY
STATION 2724+47.66
STRUCTURE NUMBER 101-0213 (N.B.)
STRUCTURE NUMBER 101-0214 (S.B.)

DESIGNED	JKL	05/25/16
DRAWN	MGM	12/06/16
REVIEWED	FLN	12/06/16

I:\06jobs\0652055\CADD\Struct\Sheet\1010213 & 1010214-XXXXX-GenDets-Harrison-Stl Beam.dgn

© Copyright Hanson Professional Services Inc. 2017

HANSON
PROFESSIONAL DESIGN FIRM LICENSE #184-001584

USER NAME = hussu00411	DESIGNED - JKL	REVISED	
	CHECKED - FLN	REVISED	
PLOT SCALE = 0:2.00 ':' / in.	DRAWN - MGM / MWH	REVISED	
PLOT DATE = 3/16/2017	CHECKED - JKL	REVISED	

STATE OF ILLINOIS
DEPARTMENT OF TRANSPORTATION

GENERAL DETAILS
STRUCTURE NUMBER 101-0213 & 101-0214
SHEET NO. 3 OF 3 SHEETS

F.A.I. RTE.	SECTION	COUNTY	TOTAL SHEETS	SHEET NO.
39	(201-3)K & (4-1, 5)R	WINNEBAGO	3	3
		CONTRACT NO. 64C24		
		ILLINOIS FED. AID PROJECT		