Bench Mark: Square cut at center of door entrance to 707 W. Harrison St; South side of Harrison St. ±90' west of west line of Des Plaines. Elevation 597.47. A t cut in the SE anchor bolt at the 11th street light N. of Roosevelt on the W. side of Halsted. Elev. 594.06.

Existing Structure: S.N. 016-2448 was originally built in 1960 under section 0101.6-IP. F.A.I. Route Number 94 carries WB I-290 traffic to NB I-90/94. The existing structure consists of a 5-span multi-beam superstructure and has an overall length of approx. 287'-0" and an out-to-out width of 29'-0". The existing superstructure consists of with 7" thick concrete deck with 1½" overlay. The existing substructure units are founded on drilled shafts and sub piers and consist of a closed abutment and multi columns piers. The existing structure is to be removed and replaced.

Traffic Control: Existing Ramp WN & Ramp WS will be closed and traffic will be detoured during construction. Traffic on Ramp EN, I-290 and I-90/94 will be maintained with stage construction.

No Salvage.

Notes:
1. All structural steel shall be galvanized or metalized (thermal spraying).
2. Span lengths are measured along ℄ & PGL Ramp WN.
3. For other Highway Classifications, see Sheet 3 of 3.

APPROVED
NOV 01 2017
AS A BASIS FOR PREPARATION OF DETAILED PLANS

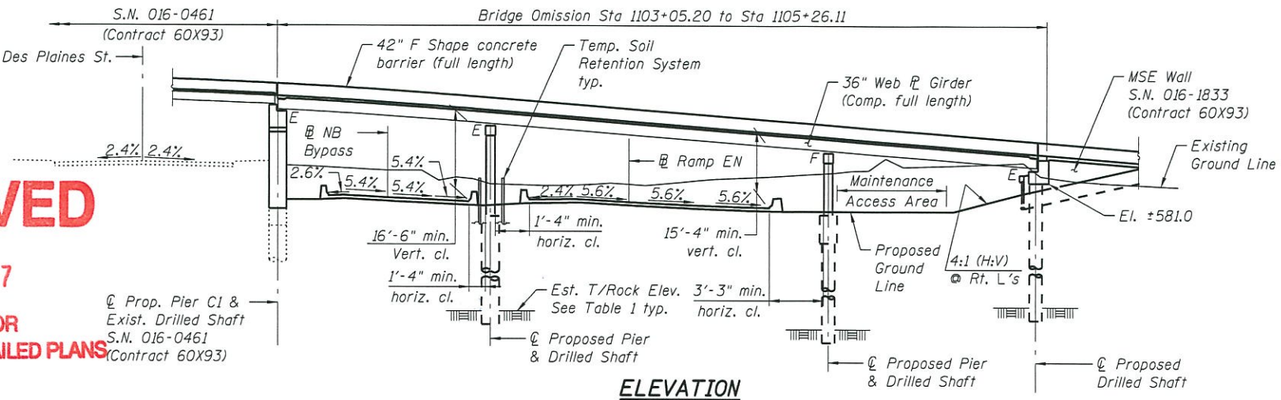

ELEVATION

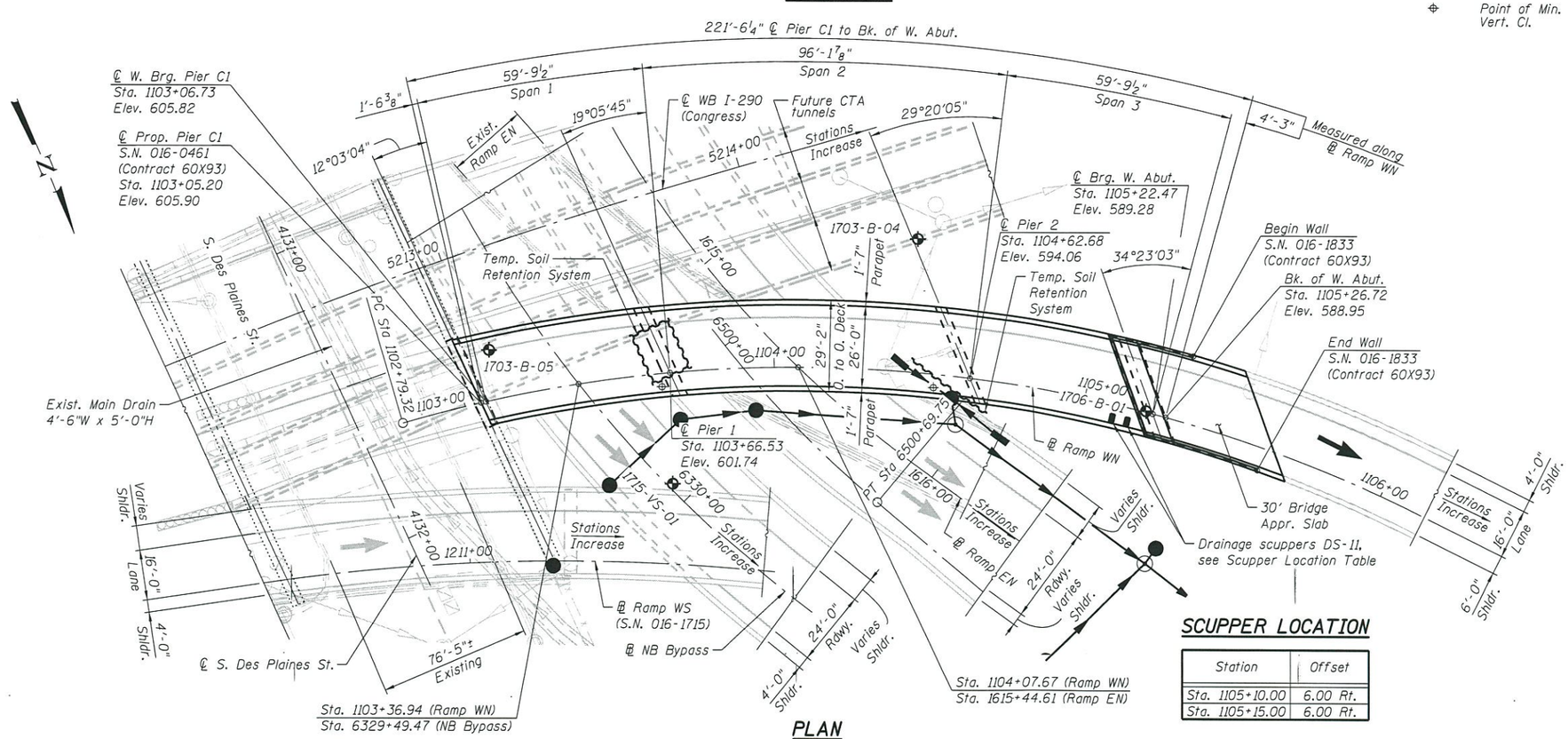

PLAN

SCUPPER LOCATION

Station	Offset
Sta. 1105+10.00	6.00 Rt.
Sta. 1105+15.00	6.00 Rt.

LEGEND:

- Soil Boring Location
- Water Line
- Electric
- Telephone line
- Television line
- Combined Sewer
- Existing Storm Sewer
- Fiber Optic
- Gas Line
- Fire Hydrant
- Light Pole
- Proposed Storm Sewer
- Proposed Inlet
- Proposed Manhole
- Proposed Catch Basin
- Point of Min. Vert. Cl.

HIGHWAY CLASSIFICATION

Ramp WN
Functional Class: Interstate
ADT: 7,200 (2012); 9,000 (2040)
ADTT: 204 (2012); 255 (2040)
DHV: 790 (2040)
Design Speed: 30 m.p.h.
Posted Speed: 30 m.p.h.
One-Way Traffic
Directional Distribution: 100:0

DESIGN SPECIFICATIONS

2014 AASHTO LRFD Bridge Design Specifications 7th Edition with 2015 & 2016 Interim Revisions

LOADING HL-93

Allow 50#/sq. ft. for future wearing surface.

DESIGN STRESSES

FIELD UNITS

f'c = 3,500 psi
f'c = 4,000 psi (Superstructure Concrete)
fy = 60,000 psi (Reinforcement)
fy = 50,000 psi (M270 Grade 50)

SEISMIC DATA

Seismic Performance Zone (SPZ) = 1
Design Spectral Acceleration at 1.0 sec. (S_{D1}) = 0.085g
Design Spectral Acceleration at 0.2 sec. (S_{DS}) = 0.144g
Soil Site Class = D

TABLE 1

	Approx. T/Ground Elev.	Approx. T/Rock Elev.
Pier 1	581.42	480.40
Pier 2	581.52	478.70
W. Abut.	582.92	477.40

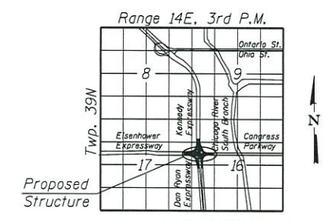

LOCATION SKETCH

GENERAL PLAN & ELEVATION
RAMP WN OVER
I-90/94 NB BYPASS/RAMP EN
F.A.I. RTE. 90/94/290
SECTION 2014-013R&B-R
COOK COUNTY
STATION 1104+07.67
STRUCTURE NO. 016-1706

T:\16898A\Struct\Cadd\TS&L\016-1706\016-1706-CIRCLE100-SHT-PB-ST-TSL-001.dgn
12-OCT-2017 14:54

PARSONS BRINCKERHOFF	FILE NAME = USER	DESIGNED - PJL	REVISED -	STATE OF ILLINOIS DEPARTMENT OF TRANSPORTATION	STRUCTURE NO. 016-1706
		CHECKED - AH	REVISED -		
	PLOT SCALE = NONE	DRAWN - DCP	REVISED -		
	PLOT DATE = 10/12/2017	CHECKED - JIG	REVISED -		SHEET NO. 1 OF 3 SHEETS

F.A.I. RTE.	SECTION	COUNTY	TOTAL SHEETS	SHEET NO.
90/94/290	2014-013R&B-R	COOK	3	1
		CONTRACT NO. 60X93		
		ILLINOIS FED. AID PROJECT		

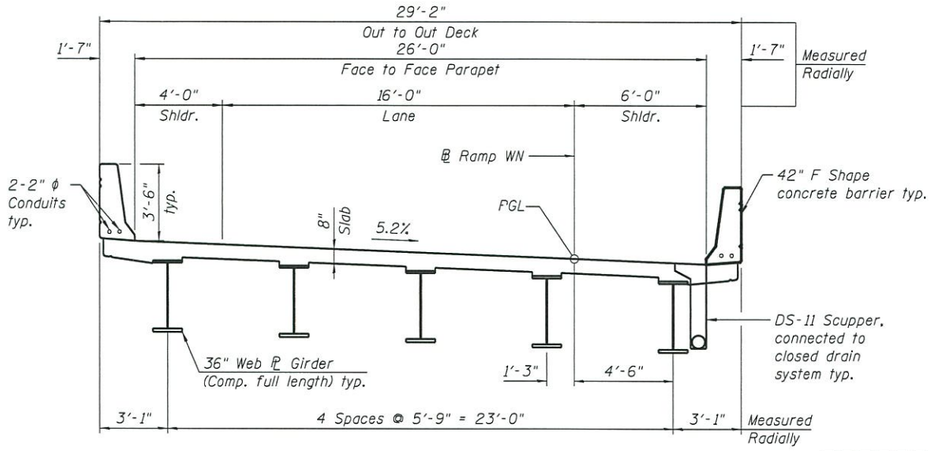

CROSS SECTION
(Looking Upstation)

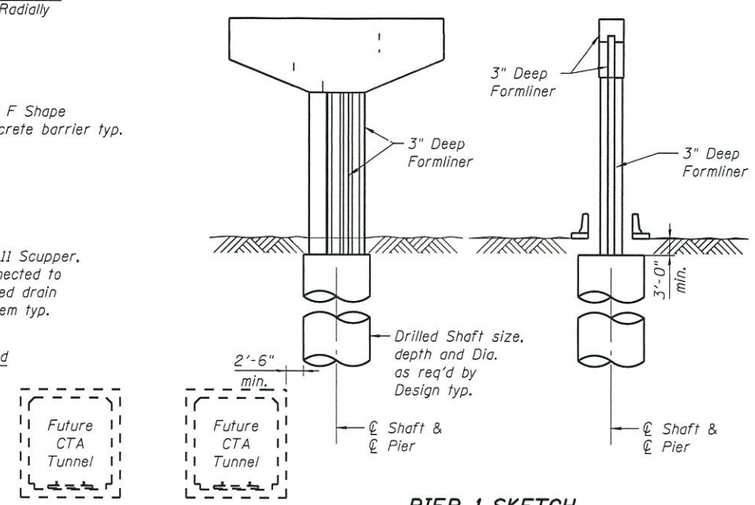

PIER 1 SKETCH
(Looking Upstation)

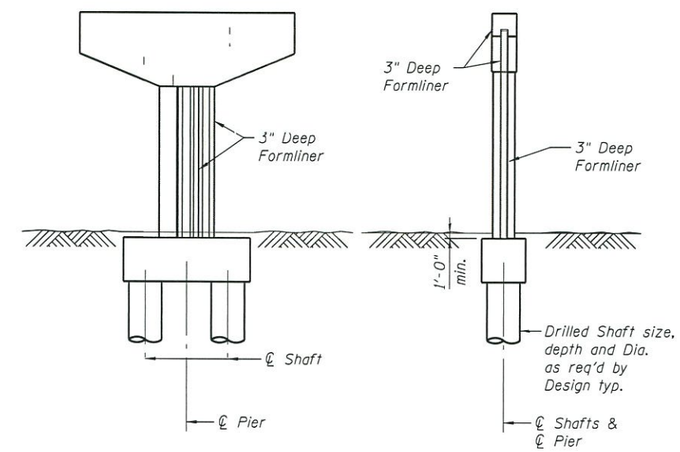

PIER 2 SKETCH
(Looking Upstation)

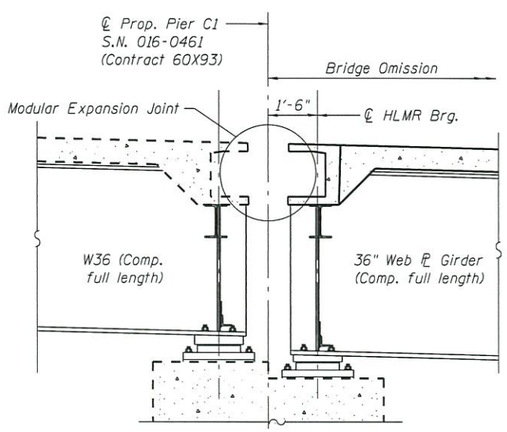

SECTION THRU PIER C1
(Horiz. dim. @ Rt. L's ℄ Prop. Pier C1, S.N. 016-0461)

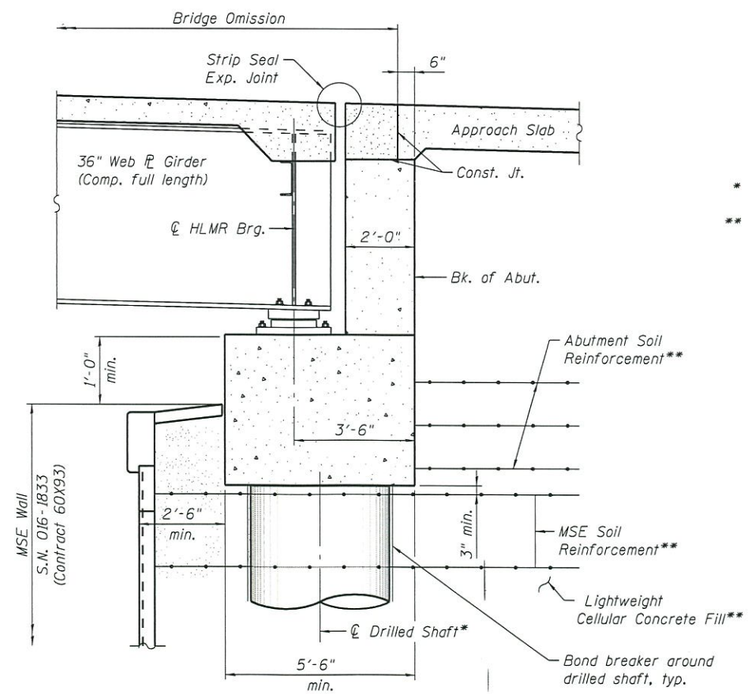

SECTION THRU WEST ABUTMENT
(Horiz. Dim. @ Rt. L's)

* Size, spacing and number to be determined in design.

** This work is included in MSE Wall S.N. 016-1833 (Contract 60X93)

Note:
Abutment Soil Reinforcement to resist lateral loads in lieu of the drilled shafts.

APPROVED

NOV 01 2017

AS A BASIS FOR PREPARATION OF DETAILED PLANS

DETAILS
RAMP WN OVER
I-90/94 NB BYPASS/RAMP EN
F.A.I. RTE. 90/94/290
SECTION 2014-013R&B-R
COOK COUNTY
STATION 1104+07.67
STRUCTURE NO. 016-1706

T:\16898A\Struct\Cadd\TS&L\016-1706\016-1706-CIRCLE100-SHT-PB-ST-TSL-002.dgn
12-OCT-2017 14:54

PARSONS BRINCKERHOFF	FILE NAME = USER	DESIGNED - PJL	REVISED -	STATE OF ILLINOIS DEPARTMENT OF TRANSPORTATION	STRUCTURE NO. 016-1706	F.A.I. RTE.	SECTION	COUNTY	TOTAL SHEETS	SHEET NO.
		CHECKED - AH	REVISED -			90/94/290	2014-013R&B-R	COOK	3	2
	PLOT SCALE = NONE	DRAWN - DCP	REVISED -					CONTRACT NO. 60X93		
	PLOT DATE = 10/12/2017	CHECKED - JIG	REVISED -		SHEET NO. 2 OF 3 SHEETS		ILLINOIS	FED. AID PROJECT		

CURVE DATA
(Ramp WN)

PROP. CURVE P-CIR-WN-2
P.I. Sta. = 1105+88.67
Δ = 69° 00′ 44″ (Rt.)
D = 12° 43′ 57″
R = 450.00′
T = 309.35′
L = 542.02′
E = 96.07′
e = 5.20%
T.R. = NA
S.E. Run = 46′
P.C. Sta. = 1102+79.32
P.T. Sta. = 1108+21.34
DS = 30

CURVE DATA
(Ramp EN)

PROP. CURVE P-CIR-EN-2
P.I. Sta. = 1624+72.31
Δ = 158° 53′ 11″ (Lt.)
D = 16° 51′ 06″
R = 340.00′
T = 1,824.37′
L = 942.85′
E = 1,515.78′
e = 5.60%
T.R. = 36′
S.E. Run = 102′
P.C. Sta. = 1606+47.94
P.T. Sta. = 1615+90.79
DS = 30

CURVE DATA
(NB Bypass)

PROP. CURVE P-NCD-NX-4
P.I. Sta. = 6328+76.78
Δ = 59° 05′ 41″ (Lt.)
D = 14° 08′ 50″
R = 405.00′
T = 229.58′
L = 417.72′
E = 60.54′
e = 5.40%
T.R. = 36
S.E. Run = 98′
P.C. Sta. = 6326+47.20
P.T. Sta. = 6330+64.91
DS = 30

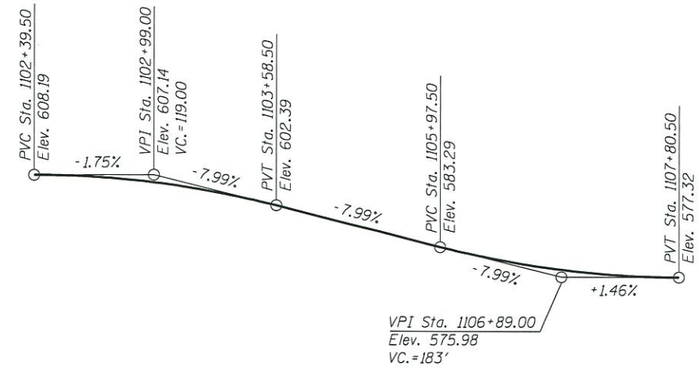

PROFILE GRADE
(Along ℄ Ramp WN)

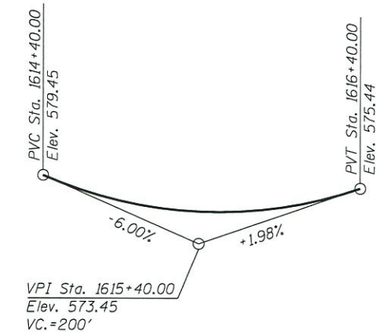

PROFILE GRADE
(Along ℄ Ramp EN)

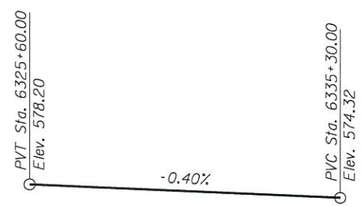

PROFILE GRADE
(Along ℄ NB Bypass)

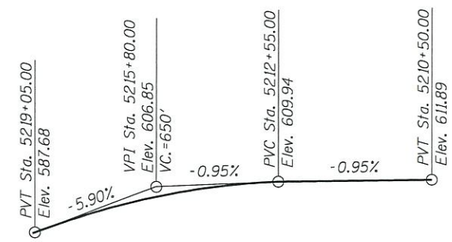

PROFILE GRADE
(Along ℄ WB I-290 (Congress))

APPROVED

NOV 01 2017

AS A BASIS FOR
PREPARATION OF DETAILED PLANS

HIGHWAY CLASSIFICATION

NB Bypass
Functional Class: Interstate
ADT: NA (2012); 17,000 (2040)
ADTT: NA (2012); 387 (2040)
DHV: 1,680 (2040)
Design Speed: 30 m.p.h.
Posted Speed: NA
One-Way Traffic
Directional Distribution: NA

Ramp EN
Functional Class: Interstate
ADT: 26,600 (2012); 31,000 (2040)
ADTT: 1,032 (2012); 1,203 (2040)
DHV: 1,910 (2040)
Design Speed: 30 m.p.h.
Posted Speed: 30 m.p.h.
One-Way Traffic
Directional Distribution: NA

WB I-290 (Congress)
Functional Class: Interstate
ADT: 29,700 (2012); 31,000 (2040)
ADTT: 460 (2012); 480 (2040)
DHV: 2,130 (2040)
Design Speed: 45 m.p.h.
Posted Speed: 45 m.p.h.
One-Way Traffic
Directional Distribution: NA

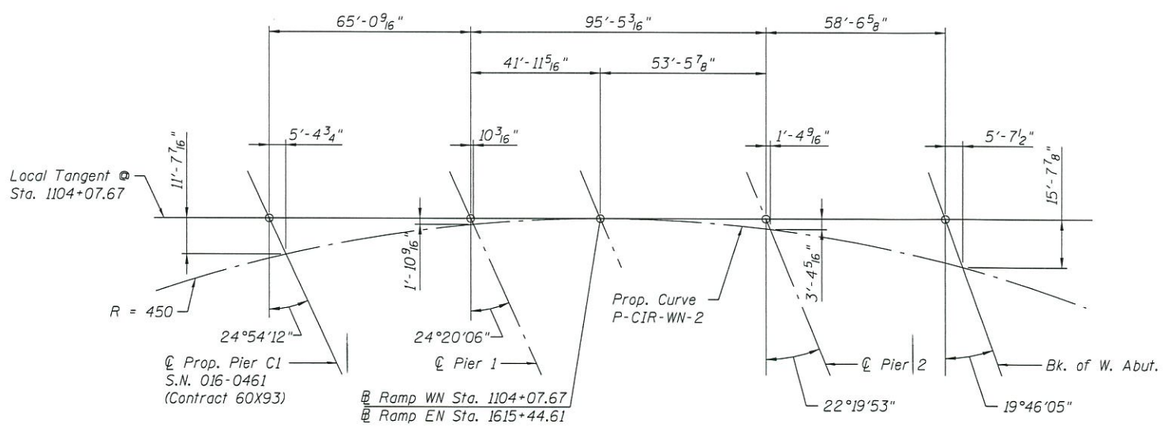

OFFSET SKETCH

DETAILS
RAMP WN OVER
I-90/94 NB BYPASS/RAMP EN
F.A.I. RTE. 90/94/290
SECTION 2014-013R&B-R
COOK COUNTY
STATION 1104+07.67
STRUCTURE NO. 016-1706

T:\16898A\Struct\Cadd\TS&L\016-1706\016-1706-CIRCLE100-SHT-PB-ST-TSL-003.dgn
12-OCT-2017 14:54

PARSONS BRINCKERHOFF	FILE NAME = USER	DESIGNED - PJL	REVISED -	STATE OF ILLINOIS DEPARTMENT OF TRANSPORTATION	STRUCTURE NO. 016-1706	F.A.I. RTE.	SECTION	COUNTY	TOTAL SHEETS / SHEET NO.
		CHECKED - AH	REVISED -			90/94/290	2014-013R&B-R	COOK	3 / 3
	PLOT SCALE = NONE	DRAWN - DCP	REVISED -					CONTRACT NO. 60X93	
	PLOT DATE = 10/12/2017	CHECKED - JIG	REVISED -		SHEET NO. 3 OF 3 SHEETS			ILLINOIS FED. AID PROJECT	